This is a digital copy of a book that was preserved for generations on library shelves before it was carefully scanned by Google as part of a project to make the world's books discoverable online.

It has survived long enough for the copyright to expire and the book to enter the public domain. A public domain book is one that was never subject to copyright or whose legal copyright term has expired. Whether a book is in the public domain may vary country to country. Public domain books are our gateways to the past, representing a wealth of history, culture and knowledge that's often difficult to discover.

Marks, notations and other marginalia present in the original volume will appear in this file - a reminder of this book's long journey from the publisher to a library and finally to you.

Usage guidelines

Google is proud to partner with libraries to digitize public domain materials and make them widely accessible. Public domain books belong to the public and we are merely their custodians. Nevertheless, this work is expensive, so in order to keep providing this resource, we have taken steps to prevent abuse by commercial parties, including placing technical restrictions on automated querying.

We also ask that you:

+ *Make non-commercial use of the files* We designed Google Book Search for use by individuals, and we request that you use these files for personal, non-commercial purposes.
+ *Refrain from automated querying* Do not send automated queries of any sort to Google's system: If you are conducting research on machine translation, optical character recognition or other areas where access to a large amount of text is helpful, please contact us. We encourage the use of public domain materials for these purposes and may be able to help.
+ *Maintain attribution* The Google "watermark" you see on each file is essential for informing people about this project and helping them find additional materials through Google Book Search. Please do not remove it.
+ *Keep it legal* Whatever your use, remember that you are responsible for ensuring that what you are doing is legal. Do not assume that just because we believe a book is in the public domain for users in the United States, that the work is also in the public domain for users in other countries. Whether a book is still in copyright varies from country to country, and we can't offer guidance on whether any specific use of any specific book is allowed. Please do not assume that a book's appearance in Google Book Search means it can be used in any manner anywhere in the world. Copyright infringement liability can be quite severe.

About Google Book Search

Google's mission is to organize the world's information and to make it universally accessible and useful. Google Book Search helps readers discover the world's books while helping authors and publishers reach new audiences. You can search through the full text of this book on the web at `http://books.google.com/`

Digitized by Google

Bd. Aug. 1938

HARVARD LAW SCHOOL
LIBRARY

Received Jan. 7. 1902

Digitized by Google

Digitized by Google

L

Digitized by Google

Digitized by Google

Digitized by Google

UNITED STATES
CIRCUIT COURTS OF APPEALS
REPORTS

CONTAINING THE

CASES DETERMINED IN ALL THE CIRCUITS

FROM THE ORGANIZATION OF THE COURTS

FULLY REPORTED WITH ANNOTATIONS

WITH TABLES OF C. C. A. CASES PUBLISHED IN VOLS. 30, 32, 37, AND 38, UNITED STATES APPEALS REPORTS.
ALSO, TABLE OF CASES IN THE UNITED STATES CIRCUIT COURTS OF APPEALS WHICH HAVE BEEN PASSED UPON BY THE SUPREME COURT OF THE UNITED STATES, AND TABLE OF CASES IN THE UNITED STATES CIRCUIT COURTS OF APPEALS IN WHICH REHEARINGS HAVE BEEN GRANTED OR DENIED

BY MEMBERS OF THE
EDITORIAL STAFF OF THE NATIONAL REPORTER SYSTEM

017/29.37

VOLUME 24

ST. PAUL
WEST PUBLISHING CO.
1897

Digitized by Google

COPYRIGHT, 1897,
BY
WEST PUBLISHING COMPANY.

Rec. Jan. 7, 1902

Digitized by Google

RULES OF COURT.

UNITED STATES CIRCUIT COURT OF APPEALS.

Fifth Circuit.

23.[1]

Ordered, that rule 23 be amended so as to read as follows:

1. The clerk shall, upon the docketing of a case, forthwith cause an estimate to be made of the cost of printing the record and of his fee for preparing it for the printer and supervising the printing, and shall notify the party docketing the case the amount of the estimate. If he shall not pay it within a reasonable time, the clerk shall notify the adverse party, and he may pay it. If neither party shall pay it, and for want of such payment the record shall not have been printed when a case is reached for hearing on the regular call of the docket, the case shall be dismissed.

2. The clerk shall cause the record in all cases to be printed forthwith after the payment of such estimate, and shall immediately thereafter furnish to the counsel of each party whose appearance shall have been entered, three copies of the printed record, taking a receipt therefor, and the parties may, by written stipulation filed prior to the printing of the record, agree that only parts of the record shall be printed, and the same may be heard only on the parts so printed, but the court may direct the printing of other parts of the record.

3. The clerk shall not take to the printer the original transcript on file, but shall cause copies to be made for the printer of such original papers sent up under rule 14, or other original papers, as are necessary to be printed.

4. The clerk shall cause at least twenty-five copies of the record to be printed, and may print a larger number on the request of either party on payment of the amount necessary for the printing of such extra copies.

5. The clerk shall supervise the printing and see that the printed record is properly indexed. He shall distribute the printed copies to the judges of the court and to the reporter from time to time, as required. If the cost of printing the record, together with the clerk's

[1]For rule 23, originally adopted in the Fifth circuit, see 21 C. C. A. cxxii., 78 Fed. cxxii.

Digitized by Google

fee for supervising the same, shall be less than the amount estimated and paid, the difference shall be refunded by the clerk to the party paying the same. If the actual cost and the clerk's fee shall exceed the clerk's estimate, the amount of such excess shall be paid to the clerk before he shall deliver or file the printed record or any copies thereof.

6. In case of reversal, affirmance or dismissal with costs, the amount of the costs of the printing of the record and of the clerk's fee for supervising the same shall be taxed against the party against whom costs are given, and shall be inserted in the body of the mandate or other proper process.

7. The clerk shall receive from either party, and use as parts of the printed record so far as the same may be of proper size and type, any portions which may have been printed in any other court, and also printed copies of patents and exhibits, allowing the party furnishing the same such sum therefor as the clerk deems reasonable, to be added to and form a part of the costs of printing.

Adopted May 11, 1897.

25.[1]

Rule 25, as amended February 27, 1894, reads as follows:

ORAL ARGUMENTS.

1. The plaintiff in error or appellant in this court shall be entitled to open and conclude the argument of the case. But when there are cross appeals they shall be argued together as one case, and the plaintiff in the court below shall be entitled to open and conclude the argument.

2. Only two counsel will be heard for each party on the argument of a case.

3. One hour will be allowed for the plaintiff in error or appellant to open and present his case, and one hour will be allowed to the defendant in error or appellee to answer; thirty minutes will then be allowed to the plaintiff in error or appellant to reply. No more time will be allowed for argument without special leave of the court.

37.

Ordered, that the following rule be adopted and published:

RULE XXXVII.

WRITS OF ERROR IN CRIMINAL CASES.

1. Writs of error to review criminal cases tried in any district or circuit court of the United States within this circuit, which may be reviewed under the provisions of the act of March 3, 1891, creating

[1] For rule 25 originally adopted in the Fifth circuit, see 21 C. C. A. cxxiv., 78 Fed. cxxiv.

Digitized by Google

this court, and the act of congress amendatory thereof, approved January 20, 1897, may be allowed in term time or in vacation by the circuit justice assigned to this circuit, by either of the circuit judges, or by any district judge who presided on the trial, and the proper security be taken, and the citation be signed by him, and he may also grant a supersedeas and stay of execution or proceedings pending the determination of such writ of error.

2. Where such writ of error is allowed in any criminal case as aforesaid, the circuit court or district court, before which the accused was tried, or the trial judge, or the circuit justice assigned to the circuit, or either of the circuit judges, shall have the power, after the citation has been duly served, to admit the accused to bail in such amount as may be fixed, such bail bond to be, as near as may be, in the form prescribed in the appendix to these rules.

Promulgated June 11, 1897.

APPENDIX.

[Form of Appearance Bond on Writ of Error in Criminal Cases.]

Know all men by these presents:

That we, ——, as principal, and ——, as sureties, are held and firmly bound unto the United States of America in the full and just sum of —— dollars, to be paid to the said United States of America, to which payment well and truly to be made we bind ourselves, our heirs, executors, and administrators, jointly and severally, by these presents.

Sealed with our seals and dated this —— day of ——, in the year of our Lord one thousand eight hundred and ninety ——.

Whereas, lately at the —— term, A. D. 189—, of the —— court of the United States for the —— district of ——, in a suit pending in said court between the United States of America, plaintiff, and ——, defendant, a judgment and sentence was rendered against the said ——, and the said —— has obtained a writ of error from the United States circuit court of appeals for the Fifth circuit, to reverse the judgment and sentence in the aforesaid suit, and a citation directed to the said United States of America, citing and admonishing the United States of America to be and appear in the United States circuit court of appeals for the Fifth circuit, at the city of New Orleans, Louisiana, sixty days from and after the date of said citation, which citation has been duly served.

Now, the condition of the above obligation is such that if the said —— shall appear in the United States circuit court of appeals for the Fifth circuit on the first day of the next term thereof, to be held at the city of ——, on the first Monday in ——, A. D. 189—, and from day to day thereafter during said term, and from term to term, and from time to time, until finally discharged therefrom, and shall abide by and obey all orders made by the said United States circuit court of appeals for the Fifth circuit in said cause, and shall surrender himself in execution of the judgment and sentence appealed from as said court may direct, if the judgment and sentence of the said —— court against him shall be affirmed by the said United States circuit court of appeals for the Fifth circuit, then the above obligation to be void; else to remain in full force, virtue, and effect.

——— [Seal.]
——— [Seal.]
——— [Seal.]

Approved:

———,
Judge of the ——.

Digitized by Google

Digitized by Google

JUDGES

OF THE

UNITED STATES CIRCUIT COURTS OF APPEALS AND THE CIRCUIT AND DISTRICT COURTS.

FIRST CIRCUIT.

Hon. HORACE GRAY, Circuit Justice.
Hon. LE BARON B. COLT, Circuit Judge.
Hon. WILLIAM L. PUTNAM, Circuit Judge.
Hon. NATHAN WEBB, District Judge, Maine.
Hon. EDGAR ALDRICH, District Judge, New Hampshire.
Hon. THOMAS L. NELSON, District Judge, Massachusetts.
Hon. GEORGE M. CARPENTER, District Judge, Rhode Island.[1]
Hon. ARTHUR L. BROWN, District Judge, Rhode Island.[2]

SECOND CIRCUIT.

Hon. RUFUS W. PECKHAM, Circuit Justice.
Hon. WILLIAM J. WALLACE, Circuit Judge.
Hon. E. HENRY LACOMBE, Circuit Judge.
Hon. NATHANIEL SHIPMAN, Circuit Judge.
Hon. WILLIAM K. TOWNSEND, District Judge, Connecticut.
Hon. ALFRED C. COXE, District Judge, N. D. New York.
Hon. ADDISON BROWN, District Judge, S. D. New York.
Hon. CHARLES L. BENEDICT, District Judge, E. D. New York.
Hon. HOYT H. WHEELER, District Judge, Vermont.

THIRD CIRCUIT.

Hon. GEORGE SHIRAS, Jr., Circuit Justice.
Hon. MARCUS W. ACHESON, Circuit Judge.
Hon. GEORGE M. DALLAS, Circuit Judge.
Hon. LEONARD E. WALES, District Judge, Delaware.[3]
Hon. EDWARD G. BRADFORD, District Judge, Delaware.[4]
Hon. EDWARD T. GREEN, District Judge, New Jersey.[5]
Hon. ANDREW KIRKPATRICK, District Judge, New Jersey,[6]
Hon. WILLIAM BUTLER, District Judge, E. D. Pennsylvania.
Hon. JOSEPH BUFFINGTON, District Judge, W. D. Pennsylvania.

[1] Deceased.
[2] Confirmed December 15, 1896.
[3] Deceased.
[4] Confirmed May 11, 1897.
[5] Deceased October 10, 1896.
[6] Confirmed December 15, 1896.

Digitized by Google

FOURTH CIRCUIT.

Hon. MELVILLE W. FULLER, Circuit Justice.
Hon. NATHAN GOFF, Circuit Judge.
Hon. CHARLES H. SIMONTON, Circuit Judge.
Hon. THOMAS J. MORRIS, District Judge, Maryland.
Hon. AUGUSTUS S. SEYMOUR, District Judge, E. D. North Carolina.[1]
Hon. THOMAS R. PURNELL, District Judge, E. D. North Carolina.[2]
Hon. ROBERT P. DICK, District Judge, W. D. North Carolina.
Hon. WILLIAM H. BRAWLEY, District Judge, E. and W. D. South Carolina.
Hon. ROBERT W. HUGHES, District Judge, E. D. Virginia.
Hon. JOHN PAUL, District Judge, W. D. Virginia.
Hon. JOHN J. JACKSON, District Judge, West Virginia.

FIFTH CIRCUIT.

Hon. EDWARD D. WHITE, Circuit Justice.
Hon. DON A. PARDEE, Circuit Judge.
Hon. A. P. McCORMICK, Circuit Judge.
Hon. JOHN BRUCE, District Judge, M. and N. D. Alabama.
Hon. HARRY T. TOULMIN, District Judge, S. D. Alabama.
Hon. CHARLES SWAYNE, District Judge, N. D. Florida.
Hon. JAMES W. LOCKE, District Judge, S. D. Florida.
Hon. WILLIAM T. NEWMAN, District Judge, N. D. Georgia.
Hon. EMORY SPEER, District Judge, S. D. Georgia.
Hon. CHARLES PARLANGE, District Judge, E. D. Louisiana.
Hon. ALECK BOARMAN, District Judge, W. D. Louisiana.
Hon. HENRY C. NILES, District Judge, N. and S. D. Mississippi.
Hon. DAVID E. BRYANT, District Judge, E. D. Texas.
Hon. JOHN B. RECTOR, District Judge, W. D. Texas.
Hon. THOMAS S. MAXEY, District Judge, W. D. Texas.

SIXTH CIRCUIT.

Hon. JOHN M. HARLAN, Circuit Justice.
Hon. WILLIAM H. TAFT, Circuit Judge.
Hon. HORACE H. LURTON, Circuit Judge.
Hon. JOHN WATSON BARR, District Judge, Kentucky.
Hon. HENRY H. SWAN, District Judge, E. D. Michigan.
Hon. HENRY F. SEVERENS, District Judge, W. D. Michigan.
Hon. AUGUSTUS J. RICKS, District Judge, N. D. Ohio.
Hon. GEORGE R. SAGE, District Judge, S. D. Ohio.
Hon. CHARLES D. CLARK, District Judge, E. and M. D. Tennessee.
Hon. ELI S. HAMMOND, District Judge. W. D. Tennessee.

[1] Deceased. [2] Confirmed May 5, 1897.

Digitized by Google

SEVENTH CIRCUIT.

Hon. HENRY B. BROWN, Circuit Justice.
Hon. WILLIAM A. WOODS, Circuit Judge.
Hon. JAMES G. JENKINS, Circuit Judge.
Hon. JOHN W. SHOWALTER, Circuit Judge.
Hon. PETER S. GROSSCUP, District Judge, N. D. Illinois.
Hon. WILLIAM J. ALLEN, District Judge, S. D. Illinois.
Hon. JOHN H. BAKER, District Judge, Indiana.
Hon. WILLIAM H. SEAMAN, District Judge, E. D. Wisconsin.
Hon. ROMANZO BUNN, District Judge, W. D. Wisconsin.

EIGHTH CIRCUIT.

Hon. DAVID J. BREWER, Circuit Justice.
Hon. HENRY C. CALDWELL, Circuit Judge.
Hon. WALTER H. SANBORN, Circuit Judge.
Hon. AMOS M. THAYER, Circuit Judge.
Hon. JOHN A. WILLIAMS, District Judge, E. D. Arkansas.
Hon. ISAAC C. PARKER, District Judge, W. D. Arkansas.[1]
Hon. JOHN H. ROGERS, District Judge, W. D. Arkansas.[2]
Hon. MOSES HALLETT, District Judge, Colorado.
Hon. OLIVER P. SHIRAS, District Judge, N. D. Iowa.
Hon. JOHN S. WOOLSON, District Judge, S. D. Iowa.
Hon. CASSIUS G. FOSTER, District Judge, Kansas.
Hon. RENSSELAER R. NELSON, District Judge, Minnesota.[3]
Hon. WM. LOCHREN, District Judge, Minnesota.[4]
Hon. ELMER B. ADAMS, District Judge, E. D. Missouri.
Hon. JOHN F. PHILIPS, District Judge, W. D. Missouri.
Hon. ELMER S. DUNDY, District Judge, Nebraska.[5]
Hon. WILLIAM D. McHUGH, District Judge, Nebraska.[6]
Hon. W. H. MUNGER, District Judge, Nebraska.
Hon. ALFRED D. THOMAS, District Judge, North Dakota.[7]
Hon. CHARLES F. AMIDON, District Judge, North Dakota.[8]
Hon. ALONZO J. EDGERTON, District Judge, South Dakota.[9]
Hon. JOHN E. CARLAND, District Judge, South Dakota.[10]
Hon. JOHN A. MARSHALL, Judge, Utah.
Hon. JOHN A. RINER, District Judge, Wyoming.

[1] Deceased November 17, 1896.
[2] Commissioned December 15, 1896.
[3] Resigned May 16, 1896.
[4] Commissioned May 18, 1896. Confirmed same date.
[5] Deceased October 28, 1896.
[6] Resigned.
[7] Deceased August 8, 1896.
[8] Commissioned August 31, 1896. Confirmed February 18, 1897.
[9] Deceased August 9, 1896.
[10] Commissioned December 15, 1896.

Digitized by Google

NINTH CIRCUIT.

Hon. STEPHEN J. FIELD, Circuit Justice.
Hon. JOSEPH McKENNA, Circuit Judge.[1]
Hon. WILLIAM B. GILBERT, Circuit Judge.
Hon. ERSKINE M. ROSS, Circuit Judge.
Hon. WM. W. MORROW, District Judge, N. D. California.
Hon. OLIN WELLBORN, District Judge, S. D. California.
Hon. HIRAM KNOWLES, District Judge, Montana.
Hon. CORNELIUS H. HANFORD, District Judge, Washington.
Hon. THOMAS P. HAWLEY, District Judge, Nevada.
Hon. CHARLES B. BELLINGER, District Judge, Oregon.
Hon. JAMES H. BEATTY, District Judge, Idaho.
Hon. ARTHUR K. DELANEY, District Judge, Alaska.

[1]Resigned.

Digitized by Google

CASES REPORTED.

Page

Adams, Cowen v. 198
Advance, The, two cases..... 676
Allianca, The, London Assur. Corp. v. 676
Allington & Curtis Manuf'g Co. v. Booth 378
Alvena, The, Pennsylvania R. Co. v. 411
Ambrose, Bartlett v..... 397
American Buttonhole, Overseaming & Sewing Machine Co. v. Babcock 677
American Grocery Co. v. Godillot.. 677
American Loan & Trust Co., Oregon Short Line & U. N. Ry. Co. v. 686
American Loan & Trust Co., Oregon Short Line & U. N. Ry. Co. v., three cases..... 687
American Loan & Trust Co., Roth v. 688
American Nat. Bank of Kansas City, Mo., Williams v..... 693
American Soda-Fountain Co, Green v. 41
American Steel-Barge Co., Merritt v. 530
Anderson v. Mackay..... 677
Apgar v. United States..... 113
Appleton, Eaucabert v.....;.... 680
Aspinwall v. Glenn..... 677
Atlantic City R. Co., Union Switch & Signal Co. v..... 690
Atlantic Trust Co. v. Proceeds of the Advance 676
Atlantic Trust Co., Town of Darlington v..... 257
Atlas S. S. Co. v. The Chicago.... 411
Aultman & Taylor Co. v. Syme.... 539

Babcock, American Buttonhole, Overseaming & Sewing Machine Co. v..... 677
Baker, Denton v..... 476
Baldwin, Davidson v..... 453
Baltimore & O. R. Co. v. Weedon.. 249
Bartlett v. Ambrose..... 397

Page

Bausman v. Kinnear..... 473
Beach v. Inman..... 408
Beaconsfield, The, Sanbern v..... 677
Benedict, Central Trust Co. of New York v..... 56
Bennett v. Salisbury..... 329
Bertha M. Miller, The..... 641
Birmingham Cement Manufacturing Co. v. Gates Iron Works.... 132
Blanks v. Klein..... 144
Blum, White v..... 573
Board of Com'rs of Gunnison County, Colo., Rollins v..... 298
Booth, Allington & Curtis Manuf'g Co. v..... 378
Bowden, The, v. The Decatur H. Miller 267
Bowen v. Clymer..... 446
Brady v. Evans..... 236
Bramble v. Culmer..... 182
Branchi v. Glenn..... 677
Briggs, Town of Phelps v..... 690
Brooks, Roberts v..... 158
Brown v. Prince Steam Shipping Co. 678
Brown v. Proceeds of the Seguranca 688
Brown, Daniel v..... 680
Brown, Excelsior Pebble Phosphate Co. v..... 681
Brown, Hayden v..... 683
Brunswick-Balke-Collender Co. v. Phelan Billiard-Ball Co..... 451
Bryson v. Koons..... 678
Buffalo Bill's Wild West Co. v. Roser 678
Buffalo Natural Gas Fuel Co., United States v..... 4
Bull, Severs v..... 689
Bumpass, Thomasson v..... 180
Bunker Hill & S. Mining & Concentrating Co. v. Schmelling..... 564
Burke v. Short..... 422
Burr, United States v..... 690
Burt v. Glenn..... 678
Buskirk, King v..... 82

Digitized by Google

Page

Calvin v. Escanaba Towing & Wrecking Co. 688
Campbell, Matheson v. 384
Canada Shipping Co. v. Haskell... 678
Carter, Central Trust Co. v. 73
Carter Mach. Co. v. Hanes 128
Catholicon Co., New England Furniture & Carpet Co. v. 595
Catlin, Chase v. 679
Central Trust Co. v. Carter 73
Central Trust Co. of New York v. Benedict 56
Chase v. Catlin 679
Chehalis County, State Trust Co. v. 584
Chicago, The, Atlas S. S. Co. v. 411
Choctaw, O. & G. Ry. Co., Miller v. 685
Churchill, The F. W. Wheeler v... 353
Citizens' Nat. Bank of Des Moines, Iowa, Ex parte 679
Citizens' Trust & Surety Co. of Philadelphia, McCanna & Fraser Co. v. 11
City of Chester, The 51
City of Hastings, Neb., v. Thomas 679
City of Humboldt v. Jackson 679
City of Jacksonville v. Smith 97
City of Omaha v. New England Loan & Trust Co. 679
Clark, Moore v. 685
Clymer, Bowen v. 446
Cobleigh, Grand Trunk Ry. Co. of Canada v. 342
Cockrill v. Woodson 679
Collector of Customs of Port and District of San Francisco, Grace v. 606
Coloritype Co. v. Williams 163
Commercial Travelers' Mut. Acc. Ass'n of America v. Fulton 654
Cornwall, Davis v. 680
Cowen v. Adams 198
Cowles Electric Smelting & Aluminum Co. v. Lowrey 616
Cox v. Montague 364
Culmer, Bramble v. 182
Cunningham, Kinney v. 684

Daniel v. Brown 680
Davidson v. Baldwin 453
Davis v. Cornwall 680
Davis v. Wakelee 680
Decatur H. Miller, The, The Bowden v. 267
De Lacey, Northern Pac. Ry. Co. v. 686

Page

Denton v. Baker 476
Denver & R. G. R. Co. v. Lorentzen 592
Dewey, Stratton v. 435
Dickson, Fidelity Insurance, Trust & Safe-Deposit Co. v. 60
Dodson v. Fletcher 69
Dodson v. Fletcher 466
Dominici, United States v. 116
Donallan v. Tannage Patent Co... 647
Downs v. Farmers' Loan & Trust Co. 500
Ducas, United States v. 121
Dudley, United States v. 449
Dwight, Jackson v. 380

Earnmoor S. S. Co., New Zealand Ins. Co. v. 644
Eaucabert v. Appleton 680
Ebner v. Juneau Min. & Manuf'g Co. 680
Eddy v. Glenn 680
Edison Electric Light Co. v. Stafford 680
Edwards, St. Louis, I. M. & S. Ry. Co. v. 300
Einstein, United States v. 346
Eleven Hundred Head of Cattle, United States v. 691
Elliott, Peck v. 425
Emil Kiewert Co. v. Juneau 294
Erhardt, Hahn v. 265
Escanaba Towing & Wrecking Co., Calvin v. 688
Evans, Brady v. 236
Excelsior Coal Co. v. Oregon Imp. Co. 640
Excelsior Elevator Guard & Hatch Cover Co. v. Foote 673
Excelsior Pebble Phosphate Co. v. Brown 681

Farmers' Loan & Trust Co. v. Farmers' Loan & Trust Co., three cases 681
Farmers' Loan & Trust Co. v. Green 506
Farmers' Loan & Trust Co. v. McClure 64
Farmers' Loan & Trust Co. v. McClure 66
Farmers' Loan & Trust Co. v. Northern Pac. R. Co. 511
Farmers' Loan & Trust Co., Downs v. 500

Digitized by Google

Page

Farmers' Loan & Trust Co., Lackawanna Iron & Coal Co. v..... 487
Farmers' Loan & Trust Co., Morgan's Louisiana & T. R. & S. S. Co. v..... 495
Farmers' Loan & Trust Co., Southern Development Co. v..... 497
Felton v. Spiro..... 321
Ferguson, United States v..... 1
Fidelity Insurance, Trust & Safe-Deposit Co. v. Dickson..... 60
Fidelity Insurance, Trust & Safe-Deposit Co. v. Virginia & T. Coal & Iron Co..... 681
Fidelity Mut. Life Ass'n, Maier v.. 239
Fidelity & Casualty Co. v. Randolph 320
First Nat. Bank of Brandon, Kaiser v..... 88
First Nat. Bank of Concord v. Hawkins 444
First Nat. Bank of Little Rock, United States Nat. Bank v..... 597
Fitzhugh, Hazzard v..... 232
Flagler v. Kidd..... 123
Fletcher, Dodson v..... 69
Fletcher, Dodson v..... 466
Foote, Excelsior Elevator Guard & Hatch Cover Co. v..... 673
Foppes v. United States..... 681
Foppes v. United States, two cases.. 682
Foster v. Lincoln's Ex'r..... 470
Fowler Manuf'g Co. v. Pierpont Boiler Co..... 682
Frankel v. United States..... 682
Fulton, Commercial Travelers' Mut. Acc. Ass'n of America v.... 654
F. W. Wheeler, The, v. Churchill.. 353

Garner v. Second Nat. Bank of Providence, R. I..... 682
Garrett v. T. H. Garrett & Co..... 173
Garrett & Co., Garrett v..... 173
Gates Iron Works, Birmingham Cement Manufacturing Co. v.... 132
George S. Homer, The, Harris v.. 682
Gibbon v. Loewer Sole-Rounder Co. 612
Glenn, Aspinwall v..... 677
Glenn, Branchi v..... 677
Glenn, Burt v..... 678
Glenn, Eddy v..... 680
Glenn, Mayer v..... 684
Glenn, Pomeroy v..... 687
Glenn, Randall v..... 688
Glenn, Williams v..... 693

Page

Glide, The..... 46
Godillot, American Grocery Co. v.. 677
Godwin, United States v., two cases 691
Gougar v. Morse..... 682
Grace v. Collector of Customs of Port and District of San Francisco 606
Graffiin, Hudson v..... 46
Grand Avenue Hotel Co. v. Wharton 441
Grand Trunk Ry. Co. of Canada v. Cobleigh 342
Graven, MacLeod v..... 449
Graves v. Stewart..... 683
Green v. American Soda-Fountain Co. 41
Green v. Farmers' Loan & Trust Co. 506

Hahn v. Erhardt..... 265
Hamlin v. Toledo, St. L. & K. C. R. Co..... 271
Hampton & O. P. Ry. Co., Woodfin v..... 693
Hanes, Carter Mach. Co. v..... 128
Hard v. Proceeds of the Advance.. 676
Hardy v. Shedden Co..... 261
Harper, Scullin v..... 169
Harris v. The George S. Homer... 682
Hartman v. Prince Steam Shipping Co. 678
Harvey v. Winney..... 683
Haskell, Canada Shipping Co. v... 678
Hawkins, First Nat. Bank of Concord v..... 444
Hayden v. Brown..... 683
Hazzard v. Fitzhugh..... 232
Heidbreder, Owens v..... 362
Henderson, Ries v..... 194
Hicks, St. Louis & S. F. Ry. Co. v., two cases..... 563
Hill, United States v..... 691
Hole, Magna Charta Silver Mining & Tunnel Co. v..... 684
Homer, The George S..... 682
Hubbard v. Tod..... 683
Hubbard, Tod v..... 690
Hudson v. Graffiin..... 46
Huntington, United States v..... 691

Inman, Beach v..... 408
Irwin, United States v..... 349

Jackson v. Dwight..... 380

Digitized by Google

Page
Jackson, City of Humboldt v..... 679
Jacksonville, T. & K. W. Ry. Co., Savannah, F. & W. Ry. Co. v... 437
Jones v. Meehan..... 683
Jordan, Tarr v..... 641
Juneau, Emil Kiewert Co. v..... 294
Juneau Min. & Manuf'g Co., Ebner v. 680

Kaiser v. First Nat. Bank of Brandon 88
Kelley-Goodfellow Shoe Co. v. Scales 683
Kidd, Flagler v..... 123
Kiewert Co. v. Juneau..... 294
King v. Buskirk..... 82
King v. Lewis..... 683
King v. McClintock..... 684
Kingman v. Western Manuf'g Co.. 684
Kinnear, Bausman v..... 473
Kinney v. Cunningham..... 684
Kirkpatrick, Pope Manuf'g Co. v. 687
Klein, Blanks v..... 144
Klein, Starcke v..... 144
Koenig, Spedden v..... 189
Koons, Bryson v..... 678
Krall v. United States..... 543

Lackawanna Iron & Coal Co. v. Farmers' Loan & Trust Co..... 487
Lake Erie & W. Ry. Co., Mulcahey v. 685
Lake Nat. Bank v. Wolfeborough Sav. Bank..... 195
Landner, United States v..... 691
Laws, United States v..... 691
Leeming, Van Den Toorn v..... 461
Legg v. The Titan..... 464
Leslie, Standard Sewing-Mach. Co. v. 107
Lewis, King v..... 683
Lewis, Third Street & Suburban Ry. Co. v..... 482
Lincoln's Ex'r, Foster v..... 470
Loewer Sole-Rounder Co., Gibbon v. 612
London Assur. Corp. v. The Alliance 676
Lorentzen, Denver & R. G. R. Co. v. 592
Lowrey, Cowles Electric Smelting & Aluminum Co. v..... 616
Lozano v. Palatine Ins. Co..... 85
Lynch, Northern Pac. R. Co. v.... 570

McCann, United States v..... 692
McCanna & Fraser Co. v. Citizens' Trust & Surety Co. of Philadelphia 11
McClintock, King v..... 684
McClure, Farmers' Loan & Trust Co. v..... 64
McClure, Farmers' Loan & Trust Co. v..... 66
McCook, Newkirk v..... 686
Mackay, Anderson v..... 677
Mackaye v. Mallory, two cases... 420
MacLeod v. Graven..... 449
Magna Charta Silver Mining & Tunnel Co. v. Hole..... 684
Maier v. Fidelity Mut. Life Ass'n 239
Mallory, Mackaye v., two cases... 420
Manhattan Trust Co., Sioux City, O'N. & W. R. Co. v., two cases.. 689
Matheson v. Campbell..... 384
Mathews, United States v..... 127
Mayer v. Glenn..... 684
Meehan, Jones v..... 683
Merrill v. National Bank of Jacksonville 63
Merritt v. American Steel-Barge Co. 530
Michigan Pipe Co., Town of Cripple Creek v..... 690
Miles, St. Louis & S. F. Ry. Co. v. 559
Miller, The Bertha M..... 641
Miller, The Decatur H..... 267
Miller v. Choctaw, O. & G. Ry. Co. 685
Missouri Pac. Ry. Co. v. Sidell.... 685
Missouri Pac. Ry. Co., Sidell v.... 216
Montague, Cox v..... 364
Moore v. Clark..... 685
Morgan's Louisiana & T. R. & S. S. Co. v. Farmers' Loan & Trust Co. 495
Morris v. United States..... 685
Morse, Gougar v..... 682
Mosle v. The Sintran..... 689
Mulcahey v. Lake Erie & W. Ry. Co. 685
Munroe v. Philadelphia Warehouse Co. 685
Murphy v. United States..... 557

Natchez, The..... 49
National Acc. Soc. v. Spiro..... 334
National Bank of Jacksonville, Merrill v..... 63
National Mach. Co. v. Wheeler & Wilson Manuf'g Co..... 663
National Masonic Acc. Ass'n of Des Moines, Iowa, Ex parte..... 686

Digitized by Google

Page
National Masonic Acc. Ass'n of Des Moines, Iowa, Sparks v.... 679
National Masonic Acc. Ass'n of Des Moines, Iowa, Sparks v.... 686
New England Furniture & Carpet Co. v. Catholicon Co..... 595
New England Loan & Trust Co., City of Omaha v. 679
Newkirk v. McCook..... 686
New Orleans Nav. Co. v. St. Louis & N. O. Anchor Line..... 49
New Zealand Ins. Co. v. Earnmoor S. S. Co..... 644
Nordlinger, United States v..... 692
Norfolk & C. R. Co., Thom v..... 51
Norma, The, Sullivan v..... 686
Northern Pac. Ry. Co. v. De Lacey 686
Northern Pac. R. Co. v. Lynch.... 570
Northern Pac. R. Co., Farmers' Loan & Trust Co. v..... 511
Northern Trust Co., Severs v..... 689

Oliver Min. Co., Staberg v..... 689
Olson v. Snyder..... 686
Oregon Imp. Co., Excelsior Coal Co. v..... 640
Oregon Short Line & U. N. Ry. Co. v. American Loan & Trust Co... 686
Oregon Short Line & U. N. Ry. Co. v. American Loan & Trust Co., three cases..... 687
Owens v. Heidbreder..... 362

Palatine Ins. Co., Lozano v..... 85
Palmer, Philadelphia Traction Co. v. 687
Passavant, United States v..... 692
Peck v. Elliott..... 425
Peck, Rousseau v..... 7
Peddie, Roemer v..... 39
Peirce v. Van Dusen..... 280
Pennington v. Smith..... 145
Pennsylvania R. Co. v. The Alvena 411
Phelan Billiard-Ball Co., Brunswick-Balke-Collender Co. v..... 451
Philadelphia Traction Co. v. Palmer 687
Philadelphia Warehouse Co., Munroe v..... 685
Philadelphia & R. R. Co., Union Switch & Signal Co. v..... 690
Phoenix Ins. Co. v. Warttemberg.. 547
Pierpont Boiler Co., Fowler Manuf'g Co. v..... 682

Page
Pine River Logging & Improvement Co., United States v..... 101
P. J. Willis & Bro., Townsend v... 369
Pomeroy v. Glenn..... 687
Pope Manuf'g Co. v. Kirkpatrick.. 687
Preferred Acc. Ins. Co. v. Randolph 320
Prince Steam Shipping Co., Brown v. 678
Prince Steam Shipping Co., Hartman v..... 678
Proceeds of the Advance, Atlantic Trust Co. v..... 676
Proceeds of the Advance, Hard v. 676
Proceeds of the Seguranca, Brown v. 688

Rainey, Spang v..... 551
Randall v. Glenn..... 688
Randolph, Fidelity & Casualty Co. v. 320
Randolph, Preferred Acc. Ins. Co. v. 320
Randolph, Standard Life & Accident Ins. Co. v. 320
Randolph, Travelers' Ins. Co. of Hartford v..... 305
Randolph, Union C. & S. Co. v.... 320
Ricks, In re..... 688
Ries v. Henderson..... 194
Ritter v. Ulman..... 71
Roberts v. Brooks..... 158
Robinson, Union Guaranty & Trust Co. v..... 650
Roemer v. Peddie..... 39
Roessler & Hasslacher Chemical Co., United States v..... 604
Rollins v. Board of Com'rs of Gunnison County, Colo..... 298
Roser, Buffalo Bill's Wild West Co. v..... 678
Roth v. American Loan & Trust Co. 688
Rousseau v. Peck..... 7
Russ v. Telfener..... 688

Saginaw Valley, The..... 688
St. Louis, I. M. & S. Ry. Co. v. Edwards 300
St. Louis & N. O. Anchor Line, New Orleans Nav. Co. v..... 49
St. Louis & S. F. Ry. Co. v. Hicks, two cases..... 563
St. Louis & S. F. Ry. Co. v. Miles 559

Digitized by Google

Page
St. Louis & S. F. Ry. Co., Weatherby v. 693
Salisbury, Bennett v. 329
Sanbern v. The Beaconsfield 677
Saunders, United States v. 649
Savannah, F. & W. Ry. Co. v. Jacksonville, T. & K. W. Ry. Co. 437
Scales, Kelley-Goodfellow Shoe Co. v. 683
Schmelling, Bunker Hill & S. Mining & Concentrating Co. v. 564
Scullin v. Harper 169
Seattle, L. S. & E. Ry. Co. v. Union Trust Co. 512
Second Nat. Bank of Providence, R. I., Garner v. 682
Seguranca, The 688
Selden, Travelers' Ins. Co. v. 92
Severs v. Bull 689
Severs v. Northern Trust Co. 689
Shedden Co., Hardy v. 261
Short, Burke v. 422
Sidell v. Missouri Pac. Ry. Co. 216
Sidell, Missouri Pac. Ry. Co. v. 685
Sintran, The Mosle v. 689
Sioux City, O'N. & W. R. Co. v. Manhattan Trust Co., two cases.. 689
Smith, City of Jacksonville v. 97
Smith, Pennington v. 145
Smith, Woerishoeffer v. 693
Snyder, Olson v. 686
Southern Development Co. v. Farmers' Loan & Trust Co. 497
Spang v. Rainey 551
Sparks v. National Masonic Acc. Ass'n of Des Moines, Iowa 679
Sparks v. National Masonic Acc. Ass'n of Des Moines, Iowa 686
Spedden v. Koenig 189
Spencer v. Uselton 689
Spiro, Felton v. 321
Spiro, National Acc. Soc. v. 334
Staberg v. Oliver Min. Co. 689
Stafford, Edison Electric Light Co. v. 689
Stahl v. Williams 690
Standard Life & Accident Ins. Co. v. Randolph 320
Standard Sewing-Mach. Co. v. Leslie 107
Starcke v. Klein 144
State Trust Co. v. Chehalis County 584
Steiner v. United States 690
Stewart, Graves v. 683
Stratton v. Dewey 435

Page
Sullivan v. The Norma 686
Sweeney, Tyler Min. Co. v. 578
Syme, Aultman & Taylor Co. v. 539

Tannage Patent Co., Donallan v. .. 647
Tarr v. Jordan 641
Teifener, Russ v. 688
Thacker, White v. 374
T. H. Garrett & Co., Garrett v. 173
Third Street & Suburban Ry. Co. v. Lewis 482
Thom v. Norfolk & C. R. Co. 51
Thomas, City of Hastings, Neb., v. 679
Thomasson v. Bumpass 180
Titan, The, Legg v. 464
Tod v. Hubbard 690
Tod, Hubbard v. 683
Toledo, St. L. & K. C. R. Co., Hamlin v. 271
Toledo, St. L. & K. C. R. Co., White v. 467
Town of Cripple Creek v. Michigan Pipe Co. 690
Town of Darlington v. Atlantic Trust Co. 257
Town of Phelps v. Briggs 690
Townsend v. P. J. Willis & Bro. 369
Travelers' Ins. Co. v. Selden 92
Travelers' Ins. Co. of Hartford v. Randolph 305
Turner, Waples-Platter Co. v. 692
Tyler Min. Co. v. Sweeney 578

Ulman, Ritter v. 71
Union C. & S. Co. v. Randolph 320
Union Guaranty & Trust Co. v. Robinson 650
Union Switch & Signal Co. v. Atlantic City R. Co. 690
Union Switch & Signal Co. v. Philadelphia & R. R. Co. 690
Union Trust Co., Seattle, L. S. & E. Ry. Co. v. 512
United States v. Buffalo Natural Gas Fuel Co. 4
United States v. Burr 690
United States v. Dominici 116
United States v. Ducas 121
United States v. Dudley 449
United States v. Einstein 346
United States v. Eleven Hundred Head of Cattle 691
United States v. Ferguson 1
United States v. Godwin, two cases 691
United States v. Hill 691

Digitized by Google

Page
United States v. Huntington..... 691
United States v. Irwin..... 349
United States v. Landner..... 691
United States v. Laws..... 691
United States v. McCann..... 692
United States v. Mathews..... 127
United States v. Nordlinger..... 692
United States v. Passavant..... 692
United States v. Pine River Logging & Improvement Co..... 101
United States v. Roessler & Hasslacher Chemical Co..... 604
United States v. Saunders..... 649
United States v. Vautine..... 692
United States v. Zeimer..... 692
United States, Apgar v..... 113
United States, Foppes v..... 681
United States, Foppes v., two cases 682
United States, Frankel v..... 682
United States, Krall v..... 543
United States, Morris v..... 685
United States, Murphy v..... 557
United States, Steiner v..... 690
United States, Zimmerman v..... 693
United States Nat. Bank v. First Nat. Bank of Little Rock..... 597
Uselton, Spencer v..... 689

Valencia, The, v. Zeigler..... 692
Van Den Toorn v. Leeming..... 461
Van Dusen, Peirce v..... 280
Van Valkenberg, Ypsilanti Dress-Stay Manuf'g Co. v..... 416
Vautine, United States v..... 692
Virginia & T. Coal & Iron Co., Fidelity Insurance, Trust & Safe-Deposit Co. v..... 681

Page
Wakelee, Davis v..... 680
Waples-Platter Co. v. Turner..... 692
Warttemberg, Phoenix Ins. Co. v. 547
Weatherby v. St. Louis & S. F. Ry. Co. 693
Weedon, Baltimore & O. R. Co. v.. 249
Western Manuf'g Co., Kingman v.. 684
Wharton, Grand Avenue Hotel Co. v. 441
Wheeler, The F. W., v. Churchill.. 353
Wheeler & Wilson Manuf'g Co., National Mach. Co. v..... 663
White v. Blum..... 573
White v. Thacker..... 374
White v. Toledo, St. L. & K. C. R. Co. 467
Williams v. American Nat. Bank of Kansas City, Mo..... 693
Williams v. Glenn..... 693
Williams, Coloritype Co. v..... 163
Williams, Stahl v..... 690
Willis & Bro., Townsend v..... 369
Winney, Harvey v..... 683
Woerishoeffer v. Smith..... 693
Wolfeborough Sav. Bank, Lake Nat. Bank v..... 195
Woodfin v. Hampton & O. P. Ry. Co. 693
Woodson, Cockrill v..... 670

Ypsilanti Dress-Stay Manuf'g Co. v. Van Valkenberg..... 416

Zeigler, The Valencia v..... 692
Zeimer, United States v..... 692
Zimmerman v. United States..... 693

Digitized by Google

Digitized by Google

CASES REPORTED.

ARRANGED UNDER THEIR RESPECTIVE CIRCUITS.

FIRST CIRCUIT.

Page

Bertha M. Miller, The..... 641

Canada Shipping Co. v. Haskell... 678

Donallan v. Tannage Patent Co... 647

First Nat. Bank of Concord v. Hawkins 444

Gunar v. Morse..... 682

Lake Nat. Bank v. Wolfeborough Sav. Bank..... 195

Miller, The Bertha M..... 641

Tarr v. Jordan..... 641

United States v. Saunders..... 649

SECOND CIRCUIT.

Advance, The, two cases..... 676

Allianca, The, London Assur. Corp. v. 676

Allington & Curtis Manuf'g Co. v. Booth 378

Alvena, The, Pennsylvania R. Co. v. 411

Anderson v. Mackay..... 677

Aspinwall v. Glenn..... 677

Atlantic Trust Co. v. Proceeds of the Advance 676

Atlas S. S. Co. v. The Chicago.... 411

Aultman & Taylor Co. v. Syme.... 539

Beach v. Inman..... 408

Beaconsfield, The, Sanbern v..... 677

Bennett v. Salisbury..... 329

Page

Branchi v. Glenn..... 677

Brown v. Proceeds of the Seguranca 688

Brunswick-Balke-Collender Co. v. Phelan Billiard-Ball Co..... 451

Buffalo Bill's Wild West Co. v. Roser 678

Burt v. Glenn..... 678

Chase v. Catlin..... 679

Chicago, The, Atlas S. S. Co. v.... 411

Coloritype Co. v. Williams..... 163

Commercial Travelers' Mut. Acc. Ass'n of America v. Fulton..... 654

Davis v. Cornwall..... 680

Davis v. Wakelee..... 680

Eaucabert v. Appleton..... 680

Eddy v. Glenn..... 680

Edison Electric Light Co. v. Stafford 680

Excelsior Elevator Guard & Hatch Cover Co. v. Foote..... 673

Flagler v. Kidd..... 123

Foppes v. United States..... 681

Foppes v. United States, two cases.. 682

Foster v. Lincoln's Ex'r..... 470

Frankel v. United States..... 682

Garner v. Second Nat. Bank of Providence, R. I..... 682

George S. Homer, The, Harris v.. 682

Grand Trunk Ry. Co. of Canada v. Cobleigh 342

Graves v. Stewart..... 683

Hahn v. Erhardt..... 265

Hard v. Proceeds of the Advance.. 676

Harris v. The George S. Homer... 682

Digitized by Google

Page
Hayden v. Brown..... 683
Homer, The George S..... 682

Legg v. The Titan..... 464
London Assur. Corp. v. The Alliance 676

Mackaye v. Mallory, two cases... 420
Matheson v. Campbell..... 384
Mayer v. Glenn..... 684
Missouri Pac. Ry. Co. v. Sidell.... 685
Moore v. Clark..... 685
Morris v. United States..... 685
Mosle v. The Sintran..... 689

National Mach. Co. v. Wheeler & Wilson Manuf'g Co..... 663
Norma, The, Sullivan v..... 686

Pennington v. Smith..... 145
Pennsylvania R. Co. v. The Alvena 411
Pomeroy v. Glenn..... 687
Pope Manuf'g Co. v. Kirkpatrick.. 687
Proceeds of the Advance, Atlantic Trust Co. v..... 676
Proceeds of the Advance, Hard v. 676
Proceeds of the Seguranca, Brown v. 688

Randall v. Glenn..... 688
Roberts v. Brooks..... 158
Rousseau v. Peck..... 7

Sanbern v. The Beaconsfield..... 677
Seguranca, The..... 688
Sidell v. Missouri Pac. Ry. Co.... 216
Sintran, The, Mosle v..... 689
Spang v. Rainey..... 551
Stahl v. Williams..... 690
Steiner v. United States..... 690
Sullivan v. The Norma..... 686

Titan, The, Legg v..... 464
Town of Phelps v. Briggs..... 690

United States v. Buffalo Natural Gas Fuel Co..... 4
United States v. Burr..... 690
United States v. Dominici..... 116
United States v. Ducas..... 121
United States v. Dudley..... 449
United States v. Einstein..... 346
United States v. Ferguson..... 1
United States v. Godwin, two cases 691
United States v. Huntington..... 691
United States v. Irwin..... 349
United States v. Landner..... 691
United States v. McCann..... 692
United States v. Mathews..... 127
United States v. Nordlinger..... 692
United States v. Passavant..... 692
United States v. Roessler & Hasslacher Chemical Co..... 604
United States v. Vautine..... 692
United States v. Zeimer..... 692

Valencia, The, v. Zeigler..... 692
Van Den Toorn v. Leeming..... 461

White v. Toledo, St. L. & K. C. R. Co. 467
Williams v. Glenn..... 693

Ypsilanti Dress-Stay Manuf'g Co. v. Van Valkenberg..... 416

Zimmerman v. United States..... 693

THIRD CIRCUIT.

American Grocery Co. v. Godillot.. 677

Gibbon v. Loewer Sole-Rounder Co. 612
Green v. American Soda-Fountain Co. 41

McCanna & Fraser Co. v. Citizens' Trust & Surety Co. of Philadelphia 11
Munroe v. Philadelphia Warehouse Co. 685

Philadelphia Traction Co. v. Palmer 687

Roemer v. Peddle..... 39

Union Switch & Signal Co. v. Atlantic City R. Co..... 690
Union Switch & Signal Co. v. Philadelphia & R. R. Co..... 690

FOURTH CIRCUIT.

Bartlett v. Ambrose..... 397
Bowden, The, v. The Decatur H. Miller 267
Bramble v. Culmer..... 182

Digitized by Google

Page
Bryson v. Koons..... 678

Carter Mach. Co. v. Hanes..... 128
City of Chester, The..... 51

Decatur H. Miller, The, The Bowden v..... 267

Excelsior Pebble Phosphate Co. v. Brown 681

Fidelity Insurance, Trust & Safe-Deposit Co. v. Virginia & T. Coal & Iron Co..... 681

Glide, The..... 46

Hudson v. Grafflin..... 46

King v. Buskirk..... 82
King v. McClintock..... 684

Miller, The Decatur H..... 267

Ries v. Henderson..... 194
Ritter v. Ulman..... 71

Spedden v. Koenig..... 189

Thom v. Norfolk & C. R. Co..... 51
Thomasson v. Bumpass..... 180
Town of Darlington v. Atlantic Trust Co..... 257
Travelers' Ins. Co. v. Selden..... 92

Woodfin v. Hampton & O. P. Ry. Co. 693

FIFTH CIRCUIT.

Birmingham Cement Manufacturing Co. v. Gates Iron Works.... 132
Blanks v. Klein..... 144
Bowen v. Clymer..... 446
Brown v. Prince Steam Shipping Co. 678

Central Trust Co. v. Carter..... 73
City of Jacksonville v. Smith..... 97

Downs v. Farmers' Loan & Trust Co. 500

Farmers' Loan & Trust Co. v. Green 506

Page
Green v. Farmers' Loan & Trust Co. 506

Hartman v. Prince Steam Shipping Co. 678
Hazzard v. Fitzhugh..... 232

Jackson v. Dwight..... 380

Kaiser v. First Nat. Bank of Brandon 88

Lackawanna Iron & Coal Co. v. Farmers' Loan & Trust Co..... 487
Lozano v. Palatine Ins. Co..... 85

Merrill v. National Bank of Jacksonville 63
Morgan's Louisiana & T. R. & S. S. Co. v. Farmers' Loan & Trust Co. 495

Natchez, The..... 49
New Orleans Nav. Co. v. St. Louis & N. O. Anchor Line..... 49

Owens v. Heidbreder..... 362

Ricks, In re..... 688
Russ v. Telfener..... 688

Savannah, F. & W. Ry. Co. v. Jacksonville, T. & K. W. Ry. Co. 437
Southern Development Co. v. Farmers' Loan & Trust Co..... 497
Spencer v. Uselton..... 689
Starcke v. Klein..... 144
Stratton v. Dewey..... 435

Townsend v. P. J. Willis & Bro.... 369

United States v. Eleven Hundred Head of Cattle..... 691

White v. Blum..... 573
White v. Thacker..... 374
Woerishoeffer v. Smith..... 693

SIXTH CIRCUIT.

American Buttonhole, Overseaming & Sewing Machine Co. v. Babcock 677

Baltimore & O. R. Co. v. Weedon.. 249
Brady v. Evans..... 236

Digitized by Google

Page
Burke v. Short..... 422

Calvin v. Escanaba Towing & Wrecking Co..... 688
Cowen v. Adams..... 198
Cowles Electric Smelting & Aluminum Co. v. Lowrey..... 616
Cox v. Montague..... 364

Davidson v. Baldwin..... 453

Emil Kiewert Co. v. Juneau..... 294

Felton v. Spiro..... 321
Fidelity & Casualty Co. v. Randolph 320
Fowler Manuf'g Co. v. Pierpont Boiler Co..... 682
F. W. Wheeler, The, v. Churchill.. 353

Garrett v. T. H. Garrett & Co..... 173

Hamlin v. Toledo, St. L. & K. C. R. Co..... 271
Hardy v. Shedden Co..... 261
Harvey v. Winney..... 683

Kiewert Co. v. Juneau..... 294
King v. Lewis..... 683

MacLeod v. Graven..... 449
Maier v. Fidelity Mut. Life Ass'n 239
Mulcahey v. Lake Erie & W. Ry. Co. 685

National Acc. Soc. v. Spiro..... 334

Peck v. Elliott..... 425
Peirce v. Van Dusen..... 280
Preferred Acc. Ins. Co. v. Randolph 320

Saginaw Valley, The..... 688
Standard Life & Accident Ins. Co. v. Randolph 320

Travelers' Ins. Co. of Hartford v. Randolph 305

Union C. & S. Co. v. Randolph.... 320
United States v. Laws..... 691

Wheeler, The F. W., v. Churchill.. 353

SEVENTH CIRCUIT.

Page
Apgar v. United States..... 113

Fidelity Insurance, Trust & Safe-Deposit Co. v. Dickson..... 60

Scullin v. Harper..... 169
Standard Sewing-Mach. Co. v. Leslie 107

EIGHTH CIRCUIT.

Central Trust Co. of New York v. Benedict 56
Citizens' Nat. Bank of Des Moines, Iowa, Ex parte..... 679
City of Hastings, Neb., v. Thomas 679
City of Humboldt v. Jackson..... 679
City of Omaha v. New England Loan & Trust Co..... 679
Cockrill v. Woodson..... 679

Daniel v. Brown..... 680
Denver & R. G. R. Co. v. Lorentzen 592
Dodson v. Fletcher..... 69
Dodson v. Fletcher..... 466

Farmers' Loan & Trust Co. v. Farmers' Loan & Trust Co., three cases 681
Farmers' Loan & Trust Co. v. McClure 64
Farmers' Loan & Trust Co. v. McClure 66

Grand Avenue Hotel Co. v. Wharton 441

Hubbard v. Tod..... 683

Jones v. Meehan..... 683

Kelley-Goodfellow Shoe Co. v. Scales 683
Kingman v. Western Manuf'g Co.. 684
Kinney v. Cunningham..... 684

Magna Charta Silver Mining & Tunnel Co. v. Hole..... 684
Merritt v. American Steel-Barge Co. 530
Miller v. Choctaw, O. & G. Ry. Co. 685

Digitized by Google

Page
National Masonic Acc. Ass'n of Des Moines, Iowa, Ex parte..... 686
New England Furniture & Carpet Co. v. Catholicon Co..... 595
Newkirk v. McCook..... 686

Olson v. Snyder..... 686
Oregon Short Line & U. N. Ry. Co. v. American Loan & Trust Co.... 687

Rollins v. Board of Com'rs of Gunnison County, Colo..... 298

St. Louis, I. M. & S. Ry. Co. v. Edwards 300
St. Louis & S. F. Ry. Co. v. Hicks, two cases..... 563
St. Louis & S. F. Ry. Co. v. Miles 559
Severs v. Bull..... 689
Severs v. Northern Trust Co..... 689
Sioux City, O'N. & W. R. Co. v. Manhattan Trust Co., two cases.. 689
Sparks v. National Masonic Acc. Ass'n of Des Moines, Iowa..... 679
Sparks v. National Masonic Acc. Ass'n of Des Moines, Iowa..... 686
Staberg v. Oliver Min. Co..... 689

Tod v. Hubbard..... 690
Town of Cripple Creek v. Michigan Pipe Co..... 690

Union Guaranty & Trust Co. v. Robinson 650
United States v. Hill..... 691
United States v. Pine River Logging & Improvement Co..... 101
United States Nat. Bank v. First Nat. Bank of Little Rock..... 597

Waples-Platter Co. v. Turner..... 692
Weatherby v. St. Louis & S. F. Ry. Co. 693
Williams v. American Nat. Bank of Kansas City, Mo..... 693

NINTH CIRCUIT.

Page
Bausman v. Kinnear..... 473
Bunker Hill & S. Mining & Concentrating Co. v. Schmelling..... 564

Denton v. Baker..... 476

Ebner v. Juneau Min. & Manuf'g Co. 680
Excelsior Coal Co. v. Oregon Imp. Co. 640

Farmers' Loan & Trust Co. v. Northern Pac. R. Co..... 511

Grace v. Collector of Customs of Port and District of San Francisco 606

Krall v. United States..... 543

Murphy v. United States..... 557

New Zealand Ins. Co. v. Earnmoor S. S. Co..... 644
Northern Pac. Ry. Co. v. De Lacey 686
Northern Pac. R. Co. v. Lynch.... 570

Oregon Short Line & U. N. Ry. Co. v. American Loan & Trust Co... 686
Oregon Short Line & U. N. Ry. Co. v. American Loan & Trust Co., two cases 687

Phoenix Ins. Co. v. Warttemberg.. 547

Roth v. American Loan & Trust Co. 688

Seattle, L. S. & E. Ry. Co. v. Union Trust Co..... 512
State Trust Co. v. Chehalis County 584

Third Street & Suburban Ry. Co. v. Lewis..... 482
Tyler Min. Co. v. Sweeney 578

Digitized by Google

Digitized by Google

CASES CITED.

Page

Accident Ins. Co. v. Crandal, 120 U. S. 527, 530, 7 Sup. Ct. 685..... 309
Adams v. Trust Co., 15 C. C. A. 6..... 74
Adler v. Whitbeck, 44 Ohio St. 539, 9 N. E. 672..... 290
Ætna Live Stock F. & F. Ins. Co. v. Olmstead, 21 Mich. 246..... 247
Alaska Treadwell Gold Min. Co. v. Whelan, 12 C. C. A. 225, 64 Fed. 462, 465... 568
Aldridge v. Williams, 3 How. 9, 24..... 611
Alexander v. U. S., 6 C. C. A. 602, 57 Fed. 828 100
Allen v. Pegram, 16 Iowa, 163, 173..... 537
Allis v. Davidson, 23 Minn. 442..... 536
Alsop v. Riker, 155 U. S. 461, 15 Sup. Ct. 167 399
America, The, 92 U. S. 432..... 54
American Bridge Co. v. Heidelbach, 94 U. S. 798..... 505
American Eagle, The, 27 Fed. 465..... 270
American Net & Twine Co. v. Worthington, 141 U. S. 468, 12 Sup. Ct. 55..... 610
American Paper-Pail Co. v. Paper Co., 2 C. C. A. 165, 51 Fed. 229..... 197
Anderson v. Warehouse Co., 111 U. S. 479, 483, 4 Sup. Ct. 525..... 445
Annett v. Carstairs, 3 Camp. 354..... 192
Ansonia Brass & Copper Co. v. Supply Co., 144 U. S. 11, 18, 12 Sup. Ct. 601.... 614, 615
Archbishop of York v. Stapleton, 2 Atk. 136 521
Argentine Min. Co. v. Mining Co., 122 U. S. 478, 7 Sup. Ct. 1356..... 582
Arndt v. Griggs, 134 U. S. 316, 10 Sup. Ct. 557 537
Arnold v. Chesebrough, 35 Fed. 16..... 470
Aron v. Railroad Co., 132 U. S. 84, 10 Sup. Ct. 24..... 46
Arthur v. Lahey, 96 U. S. 112..... 610
Arthur v. Morrison, 96 U. S. 108..... 610
Ashton Valve Co. v. Safety-Valve Co., 3 C. C. A. 98, 52 Fed. 318..... 180
Ashwell's Will, In re, Johns. Eng. Ch. 122 214
Aspen Mining & Smelting Co. v. Billings, 150 U. S. 31, 37, 14 Sup. Ct. 4..... 63
Atchison v. Peterson, 20 Wall. 507, 512... 544, 546
Atchison, T. & S. F. R. Co. v. Meyers, 22 C. C. A. 268, 76 Fed. 443..... 172
Atlantic Works v. Brady, 107 U. S. 199, 2 Sup. Ct. 231..... 143
Augusta Bank v. City of Augusta, 36 Me. 255 588
Augusti v. Bank, 46 La. Ann. 530, 15 South. 74 .....588, 589
Aurania, The, 29 Fed. 123..... 54

Bacon v. Parker, 2 Tenn. 57..... 342
Baer v. Choir, 7 Wash. 631, 634, 32 Pac. 776, 36 Pac. 286..... 590
Baker v. Pendergast, 32 Ohio St. 494.... 255
Baltimore & O. R. Co. v. Camp, 13 C. C. A. 233, 65 Fed. 952..... 284
Baltimore & O. R. Co. v. Friel, 23 C. C. A. 77, 77 Fed. 126..... 305
Baltimore & O. R. Co. v. Griffith, 159 U. S. 611, 16 Sup. Ct. 105..... 326
Baltimore & O. R. Co. v. State (Md.) 32 Atl. 201..... 293
Baltimore & O. R. Co. v. Thompson, 10 Md. 76, 85..... 303
Baltimore & P. R. Co. v. Mackey, 157 U. S. 75, 15 Sup. Ct. 491..... 323
Bangor & P. S. & S. Co., In re, L. R. 20 Eq. 59..... 279
Bank v. Case, 99 U. S. 628..... 472
Bank v. Halstead, 10 Wheat. 51..... 469
Bank v. Kennedy, 17 Wall. 19..... 480
Bank of Bethel v. Bank, 14 Wall. 383, 397 .....479, 481
Bank of Commerce v. Bank, 11 C. C. A. 484, 63 Fed. 898..... 538
Bank of Edgefield v. Manufacturing Co., 2 C. C. A. 637, 646, 52 Fed. 98, 103..... 91
Bank of Genesee v. Bank, 13 N. Y. 309... 601
Bank of Ogdensburgh v. Arnold, 5 Paige, 38 505
Bank of Pahquioque v. Bank, 36 Conn. 325 480
Bank of the State v. Wheeler, 21 Ind. 90 600
Bank of U. S. v. Bank, 7 Gill, 415..... 536
Bark Kate Irving, The, 5 Fed. 633..... 48
Barnard v. Adams, 10 How. 270..... 462
Barnes v. District of Columbia, 91 U. S. 540 100
Barry's Case, In re, 131 U. S. 100, 9 Sup. Ct. 755 96
Bartlett v. Drew, 57 N. Y. 587..... 219
Bascy v. Gallagher, 20 Wall. 670, 682..544, 546
Bast v. Bank, 101 U. S. 96..... 110
Bath Co. v. Amy, 13 Wall. 244..... 481
Baumvoll v. Gilchrest [1892] 1 Q. B. 258; [1893] 1 App. Cas. 8.....185, 186
Beach v. Inman, 75 Fed. 840..... 410
Beal v. Bank, 15 C. C. A. 128, 130, 67 Fed. 816.....364, 444, 445
Bearse v. Ropes, 1 Spr. 331, Fed. Cas. No. 1,192 48
Beaver v. Taylor, 1 Wall. 637..... 401
Beer v. Simpson, 65 Hun, 20, 19 N. Y. Supp. 578 541
Beers v. Haughton, 9 Pet. 338, 359..... 469
Beinecke v. The Secret, 3 Fed. 665..... 192
Beryl, The, 9 Prob. Div. 137..... 54
Biggs v. Barry, Fed. Cas. No. 1,402..... 238
Black Diamond Coal Min. Co. v. Coal Co., 156 U. S. 611, 15 Sup. Ct. 482..... 640

Digitized by Google

Page
Blackler v. Boott, 114 Mass. 24..... 207
Blanks v. Klein, 3 C. C. A. 585, 53 Fed. 436 144
Blount v. Société Anonyme, 3 C. C. A. 455, 53 Fed. 98..... 197
Blum v. Bowman, 14 C. C. A. 158, 66 Fed. 883 575
Board v. Anderson, 15 C. C. A. 471, 68 Fed. 341 590
Boston, The, 1 Blatchf. & H. 309, Fed. Cas. No. 1,669; 1 Gall. 239, Fed. Cas. No. 1,670 .....126, 458
Bostwick v. Brinkerhoff, 106 U. S. 3, 1 Sup. Ct. 15..... 450
Boulton Carbon Co. v. Mills, 78 Iowa, 460, 43 N. W. 290..... 475
Bound v. Railway Co., 7 C. C. A. 322, 58 Fed. 473, 59 Fed. 509.....493, 494, 509, 511
Bowden v. Johnson, 107 U. S. 251, 261, 2 Sup. Ct. 246, 254.....367, 368, 472
Bowditch v. Boston, 101 U. S. 16..... 96
Bracken v. Railroad Co., 5 C. C. A. 548, 56 Fed. 447..... 596
Broder v. Water Co., 101 U. S. 274, 276.... 544, 546
Bronson v. Railroad Co., 2 Wall. 283-302.. 279
Brooks v. Dick, 135 N. Y. 652, 32 N. E. 230 81
Brown v. Baxter, 146 U. S. 619, 13 Sup. Ct. 260 450
Brown v. Edgington, 2 Man. & G. 279.... 443
Brown v. Guild, 23 Wall. 181.....129, 130
Brown v. Higden, 1 Atk. 291..... 521
Brownell v. Railroad Co., 47 Mo. 239..... 293
Brown's Adm'r v. Mattingly, 91 Ky. 275, 15 S. W. 353..... 207
Brunswick-Balke-Collender Co. v. Phelan Billiard Ball Co., 76 Fed. 978..... 452
Bryant v. Groves, 24 S. E. 608..... 401
Buchanan v. Bigler, 64 Tex. 589, 591..... 373
Buchanan v. Meisser, 105 Ill. 638..... 475
Buck v. Colbath, 3 Wall. 334, 335, 345..535, 536
Buckingham v. McLean, 13 How. 150.... 421
Burgess v. Seligman, 107 U. S. 20, 2 Sup. Ct. 10 445
Burke v. Dulaney, 153 U. S. 228, 14 Sup. Ct. 816 213
Burnham v. Bowen, 111 U. S. 777, 4 Sup. Ct. 675.....491, 494
Burrough's Case, 69 Pa. St. 51..... 96
Busell Trimmer Co. v. Stevens, 137 U. S. 432, 11 Sup. Ct. 150..... 615
Buskirk v. King, 18 C. C. A. 418, 72 Fed. 22 83
Bussy v. Donaldson, 4 Dall. 207..... 188
Butler v. Cockrill, 20 C. C. A. 122, 73 Fed. 945 603
Butler v. Hildreth, 5 Metc. (Mass.) 49.... 537
Butler v. Stark, 139 Mass. 19, 29 N. E. 213 588
Byers v. McAuley, 149 U. S. 608, 13 Sup. Ct. 906 205

Cairo & St. L. R. Co. v. Woosley, 85 Ill. 370, 373..... 303
Calais Steamboat Co. v. Scudder, 2 Black, 385 458
California Fig Syrup Co. v. Frederick Stearns & Co., 20 C. C. A. 22, 73 Fed. 812 178

Page
Camden v. Stuart, 144 U. S. 104-118, 12 Sup. Ct. 585..... 298
Cameron v. U. S., 148 U. S. 301, 13 Sup. Ct. 595 401
Campbell v. City of Haverhill, 155 U. S. 610, 612, 15 Sup. Ct. 217..... 310
Campbell v. Cook, 86 Tex. 630, 634, 26 S. W. 486..... 282
Canter v. Insurance Co., 3 Pet. 307, 319.. 145, 584
Carpenter v. Warner, 38 Ohio St. 416.... 256
Carrier v. Gordon, 21 Ohio St. 605, 609... 591
Carswell v. Trust Co., 20 C. C. A. 282, 74 Fed. 88 440
Carter v. Pomeroy, 30 Ind. 438..... 172
Cartwright v. Dickinson, 88 Tenn. 476-487, 12 S. W. 1030..... 432
Case v. Bank, 100 U. S. 446.....480, 482
Cass v. Dillon, 2 Ohio St. 607..... 290
Cate v. State, 3 Sneed, 120..... 433
Catlin v. Bank, 6 Conn. 233..... 220
Catoir v. Trust Co., 33 N. J. Law, 487.. 247
Catskill, The, 34 Fed. 660; 38 Fed. 367.. 54
Central R. Co. v. Keegan, 160 U. S. 259, 16 Sup. Ct. 269..... 291
Central Trust Co. v. Madden, 17 C. C. A. 238 .....194, 271, 420, 435
Central Trust Co. v. Railway Co. (1886) 26 Fed. 12..... 283
Central Trust Co. of New York v. Railroad Co., 57 Fed. 3; 65 Fed. 269....494, 534
Chaffee v. Quidnick Co., 13 R. I. 442.... 59
Chaffee v. Railroad Co., 55 Vt. 110....278, 279
Chanter v. Hopkins, 4 Mees. & W. 399... 443
Chasca, The, 32 Law T. (N. S.) 838..... 48
Chase v. U. S., 155 U. S. 489, 15 Sup. Ct. 174 650
Chicago, B. & Q. R. Co. v. Hitchcock Co. (Neb.) 59 N. W. 358..... 592
Chicago, D. & V. R. Co. v. Fosdick, 106 U. S. 47, 71, 1 Sup. Ct. 10..... 519
Chicago, M. & St. P. Ry. Co. v. Bank, 134 U. S. 276, 287, 10 Sup. Ct. 550..... 219
Chicago, M. & St. P. Ry. Co. v. Lowell, 151 U. S. 209, 218, 14 Sup. Ct. 281..... 320
Child v. Powder Works, 45 N. H. 547.... 536
China, The, 7 Wall. 67..... 188
Chittenden v. Brewster, 2 Wall. 191..... 534
Chubb v. Upton, 95 U. S. 665..... 445
Chusan, The, 2 Story, 455, Fed. Cas. No. 2,717 646
Cincinnati St. R. Co. v. Whitcomb, 14 C. C. A. 183, 66 Fed. 915..... 252
City Bank of New Haven v. Perkins, 29 N. Y. 554, 569..... 600
City Nat. Bank of Ft. Worth v. Hunter, 152 U. S. 512, 516, 14 Sup. Ct. 675..... 584
City of Galveston v. Posnainsky, 62 Tex. 129, 130..... 100
City of Indianapolis v. Gaston, 58 Ind. 227 594
City of Jacksonville v. Drew, 19 Fla. 116.. 100
City of Key West v. Baer, 13 C. C. A. 572, 66 Fed. 440..... 377
City of Lowell v. Parker, 10 Metc. (Mass.) 309 653
City of Orlando v. Pragg, 31 Fla. 111, 12 South. 368 100
City of Paris, The, Fed. Cas. No. 2,767, 14 Blatchf. 531 270

Digitized by Google

Page
City of Springfield, 29 Fed. 923..... 359
City of Tallahassee v. Fortune, 3 Fla. 19 100
Clark v. Baird, 9 N. Y. 183.....302, 303
Clark v. Five Hundred and Five Thousand Feet of Lumber, 12 C. C. A. 628, 65 Fed. 236..... 534
Clarke v. Curtis, 1 Grat. 289..... 505
Clarke v. Matthewson, 12 Pet. 164..... 421
Clarke v. Warehouse Co., 10 C. C. A. 387, 393, 62 Fed. 328, 334.....144, 584
Cleaver v. Insurance Co., 65 Mich. 527, 531-533, 32 N. W. 660, 662.....246, 247
Cleveland, C., C. & I. R. Co. v. Schneider, 45 Ohio St. 678, 699, 17 N. E. 321..... 255
Clifford v. Richardson, 18 Vt. 626..... 302
Cluett v. Claflin, 140 U. S. 180, 11 Sup. Ct. 725 419
C. N. Nelson Lumber Co. v. Town of Loraine, 22 Fed. 54..... 591
Coal Co. v. Blatchford, 11 Wall. 172..... 155
Coats v. Donnell, 94 N. Y. 168..... 220
Cochrane v. Badische Anilin & Soda Fabrik, 111 U. S. 293, 4 Sup. Ct. 455..... 391
Coffin v. Douglass, 61 Tex. 406..... 625
Cohen v. Marchant, 1 Disney, 113..... 256
Cole v. Logan, 24 Or. 304, 314, 33 Pac. 568 583
Columbia & P. S. R. Co. v. Hawthorne, 144 U. S. 202, 206, 12 Sup. Ct. 591..... 310
Com. v. Carrington, 116 Mass. 37..... 569
Compton v. Railroad Co., 15 C. C. A. 397, 68 Fed. 263..... 427
Comstock v. Herron, 5 C. C. A. 266, 55 Fed. 803 214
Conn v. Penn, 5 Wheat. 424..... 468
Continental Life Ins. Co. v. Chamberlain, 132 U. S. 304, 310, 311, 10 Sup. Ct. 87..245, 550
Continental Trust Co. of New York v. Railroad Co., 72 Fed. 92.....273, 280
Cook v. Insurance Co., 84 Mich. 12, 17, 18, 47 N. W. 568, 570..... 247
Cooke v. Bank, 52 N. Y. 96, 114, 115..... 600
Cooke v. Lamotte, 15 Beav. 234..... 215
Cooley v. Board, 1 How. 299, 320..... 285
Cooper v. Curtis, 30 Me. 488, 490..... 601
Cooper v. Randall, 59 Ill. 317..... 303
Cordier v. Cage, 44 Tex. 534..... 373
Corn-Planter Patent, 23 Wall. 181, 224..129, 137
Cosgrove v. Bennett, 32 Minn. 371, 20 N. W. 359..... 443
Costello v. Village of Wyoming, 49 Ohio St. 202, 30 N. E. 613..... 289
County of Cumberland v. Boyd, 113 Pa. St. 52, 57, 4 Atl. 346..... 611
Courtenay v. Williams, 3 Hare, 539..... 207
Covell v. Heyman, 111 U. S. 176, 4 Sup. Ct. 355 534
Creighton v. Kerr, 20 Wall. 8, 12..... 520
Crimp v. Construction Co., 18 C. C. A. 595, 72 Fed. 366, 371..... 110
Crooks v. Finney, 39 Ohio St. 57..... 239
Curlewis v. Broad, 1 Hurl. & C. 322..... 255
Curran v. Arkansas, 15 How. 307..... 219
Curtis v. Ward, 20 Conn. 204..... 106
Cutting, Ex parte, 94 U. S. 14..... 272

Dabney v. Bank, 3 S. C. 124..... 220
Davenport v. Stone (Mich.) 62 N. W. 722.. 601
Davies v. Arthur, 96 U. S. 148..... 266
Davis v. Jones, 17 C. B. 625..... 213

Page
Davis v. Trust Co., 152 U. S. 595, 14 Sup. Ct. 693 .....67, 70
Davis Electrical Works v. Light Co., 8 C. C. A. 615, 60 Fed. 276, 277..... 197
Dean v. Railway Co., 119 N. Y. 540, 23 N. E. 1054..... 345
Delaware, L. & W. R. Co. v. Ashley, 14 C. C. A. 368, 67 Fed. 209..... 293
Denn v. Reid, 10 Pet. 524, 527..... 609
Dennison Manuf'g Co. v. U. S., 18 C. C. A. 345 604
Derry v. Peek, L. R. 14 App. Cas. 337-343 238
Detroit v. Osborne, 135 U. S. 492, 10 Sup. Ct. 1012..... 100
District of Columbia v. Market Co., 108 U. S. 243, 254, 2 Sup. Ct. 543..... 611
Dodson v. Fletcher, 78 Fed. 214, 24 C. C. A. 69 466
Doe v. Mining Co., 17 C. C. A. 190, 70 Fed. 455 .....3, 124
Donovan v. Construction Syndicate [1893] 1 Q. B. 629..... 264
Doris Eckhoff, The, 32 Fed. 558, 560; 50 Fed. 135..... 415
Dow v. Railroad Co., 124 U. S. 654, 656, 8 Sup. Ct. 674, 675..... 505
Droitwich Patent Salt Co. v. Curzon, L. R. 3 Exch. 35-42..... 431
Drury v. Cross, 7 Wall. 299..... 219
Du Bois v. Kirk, 158 U. S. 58, 67, 15 Sup. Ct. 729 .....145, 584
Duff v. Bayard, 4 Watts & S. 240..... 458
Duffy v. Lytle, 5 Watts, 120..... 536
Duplex Printing-Press Co. v. Manufacturing Co., 16 C. C. A. 220, 69 Fed. 252..... 177
Dupont de Nemours v. Vance, 19 How. 162 462
Durham v. State, 89 Tenn. 723, 18 S. W. 74 433
Dutilh v. Maxwell, 2 Blatchf. 541, Fed. Cas. No. 4,207..... 120
Dwight v. Commissioners, 11 Cush. 201, 203 302
Dwight v. Insurance Co., 103 N. Y. 341, 346, 8 N. E. 654, 655..... 87

Eames v. Andrews, 122 U. S. 40, 7 Sup. Ct. 1073 .....636, 638
Eames v. Godfrey, 1 Wall. 78..... 130
E. A. Packer, The, 140 U. S. 369, 11 Sup. Ct. 794 55
Earnmoor Steamship Co. v. Insurance Co., 73 Fed. 867..... 645
East Tennessee & V. R. Co. v. Gammon, 5 Sneed, 567..... 429
Eddy v. Lafayette, 163 U. S. 456, 464, 16 Sup. Ct. 1082..... 287
Edith, The, 94 U. S. 518..... 455
Edrington v. Newland, 57 Tex. 633..... 504
Eidman v. Bowman, 58 Ill. 444..... 431
Elastic Fabrics Co. v. Smith, 100 U. S. 110 584
Elledge v. Railway Co., 100 Cal. 282, 34 Pac. 720..... 293
Elliot v. Mitchell, 28 Tex. 111, 112..... 575
Elliott v. Railway Co., 150 U. S. 245, 14 Sup. Ct. 85..... 326
Elmendorf v. Taylor, 10 Wheat. 152..... 402
Elwood v. Telegraph Co., 45 N. Y. 549..... 345
Empire City Bank, In re, 18 N. Y. 199..... 475

Digitized by Google

Page
Ervin v. Navigation Co., 27 Fed. 625..... 219
Ewing v. Blount, 20 Ala. 694..... 106
Express, The, 46 Fed. 860, 863; 3 C. C. A. 342, 52 Fed. 890..... 415

Falk, Ex parte, 42 Ohio St. 638, 641....289, 290
Farmers' Loan & Trust Co. v. McClure, 24 C. C. A. 64, 78 Fed. 209.....69, 70
Farmers' Loan & Trust Co. v. Northern Pac. R. Co., 66 Fed. 169-176..... 279
Farmers' Loan & Trust Co. v. Railroad Co., 74 Fed. 431; 150 N. Y. 410, 44 N. E. 1043 .....219, 512
Farmers' & Mechanics' Bank of Kent Co. v. Bank, 16 N. Y. 125, 134, 135..... 603
Farmers' & Merchants' Nat. Bank v. Smith, 23 C. C. A. 80, 77 Fed. 129, 135.... 600, 601
Fenton v. Packet Co., 8 Adol. & E. 835... 187
Field v. U. S., 9 Pet. 182..... 377
Finance Co. of Pennsylvania v. Railroad Co., 10 C. C. A. 323, 62 Fed. 205.....492, 494
Finney v. Boyd, 26 Wis. 366, 371..... 588
First Nat. Bank of Charlotte v. Bank, 92 U. S. 122..... 445
Fisher v. Simon, 14 C. C. A. 443, 67 Fed. 387 68
Fleckner v. Bank, 8 Wheat. 338, 360..... 600
Florida Const. Co. v. Young, 8 C. C. A. 231, 59 Fed. 721.....197, 198
Fogg v. Blair, 133 U. S. 534, 10 Sup. Ct. 338 495
Follis v. Ass'n, 62 N. W. 807, 809..... 314
Forbes v. Board of Health, 28 Fla. 26, 9 South. 862..... 100
Ford v. Douglas, 5 How. 143-167..... 363
Fordtran v. Ellis, 58 Tex. 245..... 578
Fosdick v. Schall, 99 U. S. 235..... 491
Foster v. Lincoln, 74 Fed. 382..... 369
Foster v. Rhodes, 10 N. B. R. 523, Fed. Cas. No. 4,981..... 505
Francis, The, 21 Fed. 722..... 193
Freeman v. Ass'n, 156 Mass. 351, 30 N. E. 1013 658
Freeman v. Howe, 24 How. 450..... 534
Freeman v. Insurance Co., 144 Mass. 572, 576, 12 N. E. 372..... 319
French v. Spalding, 61 N. H. 395, 402..... 588
Fretz v. Stoner, 22 Wall. 198..... 421
Furrer v. Ferris, 145 U. S. 132, 134, 12 Sup. Ct. 821 65

Gaines v. Rugg, 148 U. S. 228, 242, 13 Sup. Ct. 611..... 63
Galena & S. W. R. Co. v. Haslam, 73 Ill. 494. 497..... 303
Galliher v. Cadwell, 145 U. S. 368, 12 Sup. Ct. 873..... 399
Galveston R. Co. v. Cowdrey, 11 Wall. 482 494
Gamewell Fire-Alarm Tel. Co. v. Signal Co., 9 C. C. A. 450, 61 Fed. 208, 209..... 648
Gardner v. Railroad Co., 150 U. S. 349, 361, 14 Sup. Ct. 140..... 311
Gares v. Association, 55 Fed. 209..... 481
Gates v. Bucki, 4 C. C. A. 116, 53 Fed. 961.. 534
Gates Iron-Works v. Fraser, 42 Fed. 49; 153 U. S. 332, 14 Sup. Ct. 883.....133-135, 140
Gauthier v. Bell, 10 Fed. Cas. 103..... 120
General Smith, The, 4 Wheat. 443.....191, 455
Genesee Salt Co. v. Burnap, 20 C. C. A. 27, 73 Fed. 818..... 178

Page
Gerrish v. Black, 104 Mass. 400-404..... 298
Gibson v. Chouteau, 13 Wall. 101..... 401
Gibson v. Goldthwaite, 7 Ala. 281, 293..... 599
Gildersleeve v. Mining Co., 161 U. S. 573, 16 Sup. Ct. 663..... 399
Giles v. Stanton, 86 Tex. 627, 26 S. W. 618.. 506
Glover v. McGilvray, 63 Ala. 508..... 81
Godden v. Kimmell, 99 U. S. 201..... 402
Goldberg v. Lippmann (City Ct. N. Y.) 25 N. Y. Supp. 1003..... 542
Goodin v. Canal Co., 18 Ohio St. 169..... 219
Goodman v. Simonds, 20 How. 343..... 91
Goodrich v. Russell, 42 N. Y. 177, 184..... 610
Goodyear Dental Vulcanite Co. v. Friselle, 22 Hun, 174..... 541
Gough v. Bell, 22 N. J. Law, 441..... 161
Gould v. Insurance Co., 90 Mich. 302, 51 N. W. 455; 90 Mich. 308, 52 N. W. 754.. 247
Grace Girdler, The, 7 Wall. 196..... 269
Grand Trunk Ry. Co. v. Cummings, 106 U. S. 700, 1 Sup. Ct. 493..... 309
Grand Trunk Ry. Co. v. Ives, 144 U. S. 408, 417, 12 Sup. Ct. 679.....311, 326
Grangers' Life & Health Ins. Co. v. Kamper, 73 Ala. 325..... 432
Grant v. Walter, 148 U. S. 547, 13 Sup. Ct. 699 180
Grape Creek Coal Co. v. Farmers' Loan & Trust Co., 12 C. C. A. 350, 63 Fed. 891 3, 124
Grapeshot, The, 9 Wall. 129..... 643
Gray v. Bank, 3 Mass. 364..... 432
Gray v. Havemeyer, 3 C. C. A. 497, 53 Fed. 174, 178.....67, 70
Great Republic, The, 23 Wall. 31..... 54
Green v. Bank, 7 Hun, 63..... 480
Green v. Grissom, 53 Tex. 435..... 373
Green v. Neal, 6 Pet. 291..... 401
Greenfield Bank v. Leavitt, 17 Pick. 1.... 106
Greenlee v. Railway Co., 5 Lea, 419..... 324
Gresham v. Ware, 79 Ala. 192..... 298
Grimball v. Cruse, 70 Ala. 534, 544, 545.... 509, 511
Gulf, C. & S. F. Ry. Co. v. Washington, 1 C. C. A. 286, 49 Fed. 347..... 302
Gunther v. Insurance Co., 134 U. S. 110, 116, 10 Sup. Ct. 448..... 311

Haley v. Elliott (Colo. Sup.) 38 Pac. 771, 773 .....589, 590
Hall v. Law, 102 U. S. 461.....401, 402
Hall v. Robinson, 2 N. Y. 293..... 3
Hancock v. McKinney, 7 Tex. 384..... 575
Hand v. Railroad Co., 21 S. C. 179..... 511
Handley v. Stutz, 139 U. S. 417, 11 Sup. Ct. 530 434
Hanover R. Co. v. Coyle, 55 Pa. St. 402.... 293
Hardee v. Wilson, 146 U. S. 179, 181, 13 Sup. Ct. 39.....67, 70
Harle v. Langdon's Heirs, 60 Tex. 555..... 449
Harpending v. Shoemaker, 37 Barb. 270... 302
Harwood v. Wentworth, 162 U. S. 547, 563, 16 Sup. Ct. 890..... 290
Haskell v. Valley Co. (Neb.) 59 N. W. 680 583
Hatfield v. Bushnell, 1 Blatchf. 393, Fed. Cas. No. 6,211..... 422
H. B. Claflin Co., In re, 2 C. C. A. 647, 52 Fed. 121..... 610
Heald v. Rice, 104 U. S. 737..... 46

Digitized by Google

Page
Heath v. Railway Co., 3 Blatchf. 407, Fed. Cas. No. 6,306 440
Hedden v. Robertson, 151 U. S. 520, 14 Sup. Ct. 434 ..... 347, 348
Heidritter v. Oil-Cloth Co., 112 U. S. 294, 302, 5 Sup. Ct. 135 534
Henderson v. Walker, 55 Ga. 481 282
Hennington v. State of Georgia, 163 U. S. 299, 317, 16 Sup. Ct. 1086 286
Hermes v. Railway Co., 80 Wis. 590, 50 N. W. 584 293
Hickman v. Macon Co., 42 Fed. 759 481
Hickory v. U. S., 151 U. S. 303, 316, 14 Sup. Ct. 334 ..... 338, 655
Hicks v. Kelsey, 18 Wall. 670 453
Hill v. Com., 2 Grat. 594, 605 293
Hill v. Graham, 72 Mich. 659, 667, 40 N. W. 779 591
Hinsaman v. Hinsaman, 7 Jones (N. C.) 510 652
Hobbs v. McLean, 117 U. S. 567, 579, 6 Sup. Ct. 870 ..... 2, 609
Hochster v. De La Tour, 2 El. & Bl. 678 342
Hodgson v. Fox, 9 Ch. Div. 673 207
Hoffman v. Gordon, 15 Ohio St. 211, 218 252
Hoffman v. Young, 2 Fed. 74 45
Holder v. Railroad Co., 92 Tenn. 146, 20 S. W. 537 324
Hollins v. Iron Co., 150 U. S. 371, 14 Sup. Ct. 127 219
Holloway v. Holloway, 13 Beav. 209 ..... 178, 179
Homer Ramsdell Transp. Co. v. Compagnie Generale Transatlantique, 63 Fed. 847 188
Hooe v. Groverman, 1 Cranch, 214 187
Hooker v. Railway Co., 76 Wis. 542, 44 N. W. 1085 293
Hornsby v. Eddy, 5 C. C. A. 560, 572, 56 Fed. 461 283
Horton v. Mercer, 18 C. C. A. 18, 71 Fed. 153 538
Houghton v. Bank, 26 Wis. 663 601
Houston v. Moore, 3 Wheat. 433 450
Howard, In re, 9 Wall. 175 424
Howard v. Odell, 1 Allen, 85 ..... 455, 457
Howe v. Welch, 2 How. Prac. (N. S.) 507, 3 How. Prac. (N. S.) 465, 3 N. Y. St. Rep. 577 542
Howe Mach. Co. v. Needle Co., 134 U. S. 388, 397, 10 Sup. Ct. 570 614
Hughes v. Williams, 12 Ves. 493 ..... 297, 298
Humphrey v. Baker, 103 U. S. 736 63
Humphreys v. McKissock, 140 U. S. 304, 312, 11 Sup. Ct. 779 521
Hunter v. Hays, 7 Biss. 362, Fed. Cas. No. 6,906 505

Imperial Fire Ins. Co. v. Coos Co., 151 U. S. 452, 462, 14 Sup. Ct. 379, 381 87
Improvement Co. v. Munson, 14 Wall. 442, 448 ..... 96, 310
Indemnity Co. v. Dorgan, 7 C. C. A. 581, 58 Fed. 945 313
Insurance Co. v. Boon, 95 U. S. 117 123
Insurance Co. v. Dunham, 11 Wall. 1 647
Insurance Co. v. Harris, 97 U. S. 331 535
Insurance Co. v. Mahone, 21 Wall. 152 ..... 245, 549
Insurance Co. v. Mitchell, 26 C. C. A. —, 82 Fed. — 248
Insurance Co. v. Wilkinson, 13 Wall. 222 ..... 245, 549

Page
Jackson v. Ludeling, 21 Wall. 616 219
Jacksonville, T. & K. W. R. Co. v. Construction Co., 6 C. C. A. 249, 57 Fed. 66 509
J. E. Rumbell, The, 148 U. S. 1-19, 13 Sup. Ct. 498 455
Jetter v. Railroad Co., *41 N. Y. 154 255
John Adams, The, 1 Cliff. 404-413, Fed. Cas. No. 338 358
John Fenwick, The, L. R. 3 Adm. & Ecc. 500 270
John McIntyre, The, 9 Prob. Div. 135 54
Johnson v. Hulings, 103 Pa. St. 498 12
Johnson v. Insurance Co., 4 Allen, 388 314
Johnson v. Keith, 117 U. S. 199, 6 Sup. Ct. 669 450
Johnson v. State, 37 Ala. 457 303
Jones v. Just, L. R. 3 Q. B. 197 ..... 442, 443
Jones v. Railroad Co., 128 U. S. 443, 9 Sup. Ct. 118 311
Jones v. Town of Bridgeport, 36 Conn. 283 588
Jones v. Van Doren, 130 U. S. 684, 9 Sup. Ct. 685 521
Jones' Adm'r v. Craig, 127 U. S. 215, 216, 8 Sup. Ct. 1175 437
Jordan, Ex parte, 94 U. S. 248 279
Jordan v. Imthurn, 51 Tex. 286 373
Judd v. Gibbs, 3 Gray, 539 625
Junge v. Hedden, 146 U. S. 233, 13 Sup. Ct. 88 347
Justice Windham's Case, 5 Coke, 7b 625

Kane v. Railway Co., 128 U. S. 91, 9 Sup. Ct. 16 311
Kate Tremaine, The, 5 Ben. 60, Fed. Cas. No. 7,622 647
Keene v. Ass'n, 164 Mass. 170, 41 N. E. 203 314
Keithsburg & E. R. Co. v. Henry, 79 Ill. 299 303
Kellogg v. Krauser, 14 Serg. & R. 137 303
Kellogg Bridge Co. v. Hamilton, 110 U. S. 108, 3 Sup. Ct. 537 442
Kennedy v. Thorp, 51 N. Y. 174, 176 537
Kent v. Mining Co., 78 N. Y. 159 ..... 277, 279
Keyport & M. Steamboat Co. v. Transportation Co., 18 N. J. Eq. 13, 24 611
Keyser v. Hitz, 133 U. S. 138, 151, 10 Sup. Ct. 290 445
Keyser v. Railway Co., 66 Mich. 390, 33 N. W. 867 293
Khedive, The, 5 App. Cas. 876 55
Kimberly v. Arms, 129 U. S. 512, 9 Sup. Ct. 355 ..... 65, 298
King v. Buskirk, 24 C. C. A. 82, 78 Fed. 233 684
King v. Doane, 139 U. S. 166, 173, 11 Sup. Ct. 465 91
King v. Mining Co., 152 U. S. 222, 14 Sup. Ct. 510 582
King v. Penn, 43 Ohio St. 57, 1 N. E. 84 253
Kitchen v. Insurance Co., 57 Mich. 135, 23 N. W. 616 246
Kittredge v. Race, 92 U. S. 116, 120, 121 ..... 145, 583
Klein v. Thompson, 19 Ohio St. 571 594
Kneeland v. Trust Co., 136 U. S. 89, 10 Sup. Ct. 950 493
Knickerbocker Co. v. Rogers, 61 Fed. 297 378
Knox County Court v. U. S., 109 U. S. 229, 3 Sup. Ct. 131 261

Digitized by Google

Page

Knoxville, C. G. & L. R. Co. v. Acuff, 92 Tenn. 29, 20 S. W. 348..... 324
Kolorama, The, 10 Wall. 204..... 643

Lackawanna Iron & Coal Co. v. Loan & Trust Co. (No. 503) 24 C. C. A. 487, 79 Fed. 202.....497, 500
Lake Shore & M. S. Ry. Co. v. Prentice, 147 U. S. 101, 13 Sup. Ct. 261..... 332
Landreth v. Landreth, 22 Fed. 41..... 179
Langford v. Langford, 5 Law J. Ch. (N. S.) 60..... 59
Lasher v. Stimson, 145 Pa. St. 30, 23 Atl. 552 12
Last Chance Min. Co. v. Mining Co., 9 C. C. A. 613, 61 Fed. 557; 157 U. S. 683, 687, 15 Sup. Ct. 733, 734.....581, 582
Laugher v. Pointer, 5 Barn. & C. 547..... 265
Lawrence v. Allen, 7 How. 785, 797..... 610
Leary v. U. S., 14 Wall. 607..... 187
Leese v. Clark, 20 Cal. 389, 425..... 611
Lehigh Zinc & Iron Co. v. Bamford, 150 U. S. 665, 14 Sup. Ct. 219..... 238
Lehman v. McBride, 15 Ohio St. 573, 653.. 289, 290
Leopold v. Van Kirk, 27 Wis. 152..... 442
Lewis v. Railroad Co., 10 C. C. A. 446, 62 Fed. 218..... 272
Lewis v. Sumner, 13 Metc. (Mass.) 269.... 522
Lincoln Nat. Bank v. Perry, 14 C. C. A. 273, 66 Fed. 887.....68, 299
Liquidators of Maritime Bank v. Troop, 31 Am. & Eng. Corp. Cas. 410..... 475
Little v. Hackett, 116 U. S. 366, 372, 380, 6 Sup. Ct. 391..... 265
Little Josephine Min. Co. v. Fullerton, 7 C. C. A. 340, 58 Fed. 521..... 100
Livingston v. Story, 9 Pet. 658..... 440
Llano Imp. & Furnace Co. v. Pacific Imp. Co., 13 C. C. A. 625, 66 Fed. 526..... 81
Loague v. Railroad, 91 Tenn. 461, 19 S. W. 430 324
Lockhart v. Van Alstyne, 31 Mich. 76, 79.. 277, 279
Lord v. Goddard, 13 How. 198..... 238
Lottawanna, The, 21 Wall. 559..... 455
Louisville, N. A. & C. Ry. Co. v. Buck, 116 Ind. 566, 19 N. E. 453..... 293
Louisville & N. R. Co. v. Bean, 94 Tenn. 394, 29 S. W. 870..... 324
Louisville & N. R. Co. v. Foley (Ky.) 21 S. W. 866..... 293
Louisville & N. R. Co. v. Railway Co., 9 C. C. A. 314, 60 Fed. 993.....254, 255
Louisville & N. R. Co. v. Woodson, 134 U. S. 622, 10 Sup. Ct. 630..... 97
Loving v. Milliken, 59 Tex. 427..... 504
Lowell M. Palmer, The, 58 Fed. 701..... 53
Lowrey v. Smelting & Aluminum Co., 68 Fed. 368..... 626
Loyd v. Freshfield, 2 Car. & P. 329..... 368
Lucy, The, and The Spring Garden, 20 C. C. A. 660, 74 Fed. 572..... 269
Lulu, The, 10 Wall. 192..... 643
Lumley v. Railroad Co., 22 C. C. A. 60, 76 Fed. 66..... 427
Lund v. Inhabitants of Tyngsborough, 9 Cush. 36..... 293
Lutz v. Magone, 153 U. S. 105, 14 Sup. Ct. 777 .....5, 610
Lyman v. Bonney, 101 Mass. 562..... 219

Page

Lynch v. Railroad Co., 16 C. C. A. 151, 69 Fed. 86..... 570

McAllister v. Kuhn, 96 U. S. 87, 89..... 538
McAvity v. Paper Co., 82 Me. 504, 20 Atl. 82 475
McChesney v. City of Syracuse, 75 Hun, 503, 508, 27 N. Y. Supp. 508..... 583
McClain v. Ortmayer, 141 U. S. 419, 428, 12 Sup. Ct. 76.....180, 420
McCormick Harvesting Mach. Co. v. C. Aultman & Co., 16 C. C. A. 259, 69 Fed. 371 637
McCutcheon v. Capsule Co., 19 C. C. A. 108-115, 71 Fed. 787..... 278
McDonald v. Pike, 60 Wis. 222, 19 N. W. 44 537
McElrath v. U. S., 12 Ct. Cl. 201; 102 U. S. 426 650
McGahan v. Bank, 156 U. S. 218, 15 Sup. Ct. 347 207
McGill v. State, 34 Ohio St. 238.....289, 290
McGregor v. Insurance Co., 33 N. J. Eq. 181 277
Machine Co. v. Nixon, 105 U. S. 766, 772.. 584
McIntire v. Wood, 7 Cranch, 504..... 481
McIntyre v. Scott, 8 Johns. 159, 160...455, 458
Mackall v. Richards, 116 U. S. 45, 6 Sup. Ct. 234..... 63
McLeod v. Ginther's Adm'r, 80 Ky. 399... 293
MacLeod v. Graven, 19 C. C. A. 616, 73 Fed. 627..... 430
McLish v. Roff, 141 U. S. 661, 12 Sup. Ct. 118 .....197, 451
McNally v. Meyer, Fed. Cas. No. 8,909.... 50
McNeil v. Bank, 46 N. Y. 331..... 538
McNulta v. Lochridge, 141 U. S. 327, 331, 12 Sup. Ct. 11..... 283
Macon Co. v. Huidekoper, 134 U. S. 332, 10 Sup. Ct. 491..... 261
McRaney v. Coulter, 39 Miss. 390..... 256
Maddox v. Fenner, 79 Tex. 291, 15 S. W. 239 578
Magone v. Luckemeyer, 139 U. S. 612, 11 Sup. Ct. 651..... 351
Magone v. Rosenstein, 142 U. S. 604, 12 Sup. Ct. 391..... 128
Mallory v. Insurance Co., 97 Mich. 416, 56 N. W. 773..... 247
Marcardler v. Insurance Co., 8 Cranch, 39 187
Marden v. Manuf'g Co., 15 C. C. A. 26, 67 Fed. 809..... 648
Maria Martin, The, 12 Wall. 31, 47.....54, 270
Marshall v. Hubbard, 117 U. S. 415, 419, 6 Sup. Ct. 806..... 311
Martin's Case, 1 Fost. & F. 505..... 96
Marvine v. Hymers, 12 N. Y. 223..... 601
Marx v. Insurance Co., 39 Fed. 321, 322.. 317, 319
Mary, The, 1 Gall. 206, Fed. Cas. No. 9,-183 126
Mason v. Bemiss, 38 La. Ann. 935, 938... 588
Masonic Ben. Ass'n v. Lyman, 9 C. C. A. 104, 60 Fed. 498..... 596
Massie v. Jordan, 1 Lea, 647.....324
Master of Trinity House v. Clark, 4 Maule & S. 288..... 186
Masterson v. Herndon, 10 Wall. 416..67, 68, 70
Matthews v. Albert, 24 Md. 527..... 475
Mattox v. U. S., 146 U. S. 140, 151, 13 Sup. Ct. 50, 53.....326, 327, 329

Digitized by Google

Page
Maxey v. O'Connor, 23 Tex. 241..... 575
Maybey, The, and Cooper, 14 Wall. 215... 269
Meagher v. Manufacturing Co., 145 U. S. 608, 12 Sup. Ct. 876..... 450
Meehan v. Valentine, 145 U. S. 611, 625, 12 Sup. Ct. 972..... 311
Meiklereid v. West, 1 Q. B. Div. 428..... 186
Mellen v. Iron Works, 131 U. S. 352-367, 9 Sup. Ct. 781..... 427
Memnon, The, 62 Law T. (N. S.) 84, 6 Asp. 483..... 55
Memphis & C. R. Co. v. Grayson, 88 Ala. 572, 7 South. 122..... 536
Mercantile Trust Co. v. Railway Co., 7 C. C. A. 3, 58 Fed. 6..... 485
Merchants' Bank v. Bank, 10 Wall. 604, 645, 646, 650.....600, 603
Merrill v. Bank, 21 C. C. A. 282, 75 Fed. 148 63
Merritt v. Welsh, 104 U. S. 694..... 350
Merserau v. Insurance Co., 66 N. Y. 274.. 247
Migeon v. Railway Co., 23 C. C. A. 156, 77 Fed. 249..... 589
Miller v. Brass Co., 104 U. S. 352..... 137
Miller v. Insurance Co., 92 Tenn. 167, 187, 21 S. W. 39..... 314
Miller v. Manufacturing Co., 151 U. S. 186, 207, 14 Sup. Ct. 310.....41, 141
Miller v. Railway Co., 76 Iowa, 655, 39 N. W. 183..... 264
Miller v. Ratterman, 47 Ohio St. 163, 24 N. E. 496..... 277
Mills v. Drewitt, 20 Beav. 632..... 214
Milwaukee Boiler Co. v. Duncan, 87 Wis. 120, 58 N. W. 232..... 443
Milwaukee & M. R. Co. v. Soutter, 2 Wall. 520, 521..... 421
Miner v. Pingree, 110 Mass. 47..... 588
Mining Co. v. Tarbet, 98 U. S. 463..... 582
Minnesota Co. v. St. Paul Co., 2 Wall. 609 82
Missouri Pac. Ry. Co. v. Humes, 115 U. S. 512, 6 Sup. Ct. 110..... 283
Missouri Pac. Ry. Co. v. Mackey, 127 U. S. 205, 208, 210, 8 Sup. Ct. 1161..... 286
Mitcheson v. Oliver, 5 El. & Bl. 419-437 455, 456, 460
Moline Plow Co. v. Carson, 18 C. C. A. 606, 72 Fed. 387..... 66
Montana Ry. Co. v. Warren, 137 U. S. 348, 11 Sup. Ct. 96..... 304
Montclair v. Dana, 107 U. S. 162, 2 Sup. Ct. 403..... 311
Monticello, The, 15 Fed. 474..... 414
Moore v. U. S., 91 U. S. 270..... 338
Morgan's Assignees v. Shinn, 15 Wall. 105 455
Morgan's L. & T. R. & S. S. Co. v. Louisiana Board of Health, 118 U. S. 455, 463, 6 Sup. Ct. 1114..... 285
Morgan's L. & T. R. & S. S. Co. v. Railway Co., 137 U. S. 171, 201, 11 Sup. Ct. 61 .....82, 494, 500
Morley Sewing-Mach. Co. v. Lancaster, 129 U. S. 263, 9 Sup. Ct. 299.....41, 637
Morris v. Mowatt, 2 Paige, 586..... 510
Morris v. Rexford, 18 N. Y. 552..... 537
Morrison v. Arthur, 13 Blatchf. 194, Fed. Cas. No. 9,842..... 610
Morrow v. Steel Co., 87 Tenn. 262, 10 S. W. 495..... 278
Morrow v. Turney's Adm'r, 35 Ala. 137.. 81
Morton v. Palmer (Sup.) 14 N. Y. Supp. 912 541
Moses v. Bank, 1 Lea, 398-408..... 431
Mt. Adams & E. P. Inclined Ry. Co. v. Lowery, 20 C. C. A. 596, 609, 74 Fed. 463, 465, 477.....248, 311, 327, 328
Movius v. U. S., 66 Fed. 734..... 115
Mullan's Adm'r v. Carper, 16 S. E. 527, 37 W. Va. 215..... 401
Murdock v. Clarke, 90 Cal. 427, 27 Pac. 275 298
Muser, In re, 49 Fed. 831..... 116
Mutual Life Ins. Co. v. Phinney, 22 C. C. A. 425, 76 Fed. 617..... 603

Nashville, C. & St. L. Ry. Co. v. Alabama, 128 U. S. 96, 100, 9 Sup. Ct. 28... 285
Nason's Adm'r v. Railroad Co., 9 C. C. A. 666, 61 Fed. 605..... 264
National Acc. Society v. Spiro, 18 C. C. A. 382, 71 Fed. 897; 164 U. S. 281, 17 Sup. Ct..... 336
National Bank v. Case, 99 U. S. 628..... 445
National Bank v. Colby, 21 Wall. 609.... 479
National Bank v. Insurance Co., 95 U. S. 673, 679..... 312
National Bank of the Commonwealth v. Bank, 94 U. S. 437, 440..... 480
National Cash-Register Co. v. Cash-Register Co., 3 C. C. A. 559, 53 Fed. 369.... 46
National Masonic Acc. Ass'n v. Shryock, 20 C. C. A. 5, 73 Fed. 775..... 657
New Departure Bell Co. v. Manufacturing Co., 73 Fed. 69..... 473
Newman v. Arthur, 109 U. S. 132, 3 Sup. Ct. 88..... 347
New Orleans & C. R. Co. v. Schneider, 8 C. C. A. 571, 60 Fed. 210..... 51
New York, The, 53 Fed. 555..... 53
New York v. Rea, 18 How. 223..... 647
New York Life Ins. Co. v. Fletcher, 117 U. S. 519, 529, 531, 534, 6 Sup. Ct. 837.. 244, 549
New York, N. H. & H. R. Co. v. Blessing's Adm'r, 14 C. C. A. 396, 67 Fed. 280 345
New York, P. & O. R. Co. v. Railroad Co., 58 Fed. 268..... 441
New York & Virginia S. S. Co. v. Calderwood, 19 How. 243..... 270
Nichols, The, 7 Wall. 656-665..... 357
Nichols v. Beard, 15 Fed. 436, 437..... 610
Nix v. Hedden, 149 U. S. 304, 13 Sup. Ct. 881 5
Non Pareille, The, 33 Fed. 524..... 54
North Cape, The, 6 Biss. 505, 515, Fed. Cas. No. 10,316..... 588
Northern Liberty Market Co. v. Kelly, 113 U. S. 199, 5 Sup. Ct. 422..... 81
Northern Pac. R. Co. v. Everett, 152 U. S. 107, 113, 14 Sup. Ct. 474..... 311
Northern Pac. R. Co. v. Lamont, 16 C. C. A. 364, 69 Fed. 23..... 440
Northern Pac. R. Co. v. Peterson, 162 U. S. 346, 353, 16 Sup. Ct. 843..... 568
North Star, The, 10 C. C. A. 262, 62 Fed. 71 356
Northwestern Mut. Life Ins. Co. v. Keith, 23 C. C. A. 196, 77 Fed. 374..... 521
Norway v. Rowe, 19 Ves. 147..... 83

Digitized by Google

Page

Oelrichs v. Spain, 15 Wall. 211..... 510
Olympia, The, 9 C. C. A. 393, 61 Fed. 120.. 361
Omaha Coal, Coke & Lime Co. v. Fay (Neb.) 55 N. W. 213..... 443
Omoa & C. Coal & Iron Co. v. Huntley, 2 C. P. Div. 464..... 187
O'Neill v. Annett, 27 N. J. Law, 290...160, 161
Oregon, The, 158 U. S. 194, 15 Sup. Ct. 804 188
O'Reilly v. Morse, 15 How. 62..... 636
Orr & Lindsley Shoe Co. v. Ferrell, 68 Tex. 638, 5 S. W. 490..... 625
Orton v. Smith, 18 How. 263, 265..... 534
Oswego Tp. v. Travelers' Ins. Co., 17 C. C. A. 77, 70 Fed. 225.....3, 124
Ottawa Gas Light & Coke Co. v. Graham, 35 Ill. 346..... 304
Overton's Lessee v. Campbell, 5 Hayw. (Tenn.) 165..... 575
Owens v. Railroad Co., 2 Fed. 10..... 534
Owens v. Rains' Lessee, 5 Hayw. (Tenn.) 106 575

Pacific R. Co. of Missouri v. Railway Co., 111 U. S. 520, 4 Sup. Ct. 583..... 440
Packet Co. v. Clough, 20 Wall. 528, 540.. 292
Paine v. Insurance Co., 11 R. I. 411..... 536
Palmer v. Bank, 78 Ill. 380..... 600
Park v. Bushnell, 9 C. C. A. 138, 60 Fed. 583 596
Park Bros. & Co. v. Bushnell, 9 C. C. A. 140, 60 Fed. 583..... 655
Patapsco, The, 13 Wall. 329..... 643
Patent File Co., In re, 6 Ch. App. 83.... 220
Pawling v. U. S., 4 Cranch, 219..... 213
Paxton v. Meyer, 67 Tex. 96, 2 S. W. 817.. 449
Payne v. Hook, 7 Wall. 425.....205, 206
Payson v. Stoever, 2 Dill. 427, Fed. Cas. No. 10,863..... 429
Payson v. Withers, 5 Biss. 276, Fed. Cas. No. 10,864..... 429
Pease v. Sabin, 38 Vt. 432..... 443
Peck v. Jenness, 7 How. 612, 624, 625..... 534
Penn v. Bibby, L. R. 3 Eq. 308..... 379
Pennington v. Smith, 75 Fed. 157..... 152
Penn Mut. Life Ins. Co. v. Trust Co., 19 C. C. A. 317, 73 Fed. 653..... 238
Pennsylvania Co. v. Marion, 104 Ind. 239, 3 N. E. 874..... 594
Pennsylvania Co. v. Roy, 102 U. S. 451, 460 322
Pentz v. Clarke, 41 Md. 338..... 191
People's Bank v. Bank, 101 U. S. 181.... 600
Peoria Marine & Fire Ins. Co. v. Hall, 12 Mich. 202..... 247
Petersburg Sav. & Ins. Co. v. Dellatorre, 17 C. C. A. 310, 70 Fed. 643..... 509
Phelps v. Mayer, 15 How. 160..... 596
Philips v. Ledley, 1 Wash. C. C. 226, Fed. Cas. No. 11,096.....455, 458
Phœnix Mut. Life Ins. Co. v. Doster, 106 U. S. 30, 32, 1 Sup. Ct. 18..... 310
Pierce v. Benjamin, 14 Pick. 356, 361..... 106
Pillow v. Roberts, 13 How. 477..... 400
Pillsworth v. Hopton, 6 Ves. 51..... 83
Pilot, The, 19 Fed. Cas. 691, 693..... 358
Pittsburg, C., C. & St. L. Ry. Co. v. Cox, 45 N. E. 641..... 289
Planters' Bank of Mississippi v. Sharp, 6 How. 301, 322, 323..... 601
Pleasants v. Fant, 22 Wall. 116, 121.....97, 311
Plimpton v. Bigelow, 93 N. Y. 592..... 538

Page

Polk v. Coffin, 9 Cal. 56..... 303
Poor v. Carleton, Fed. Cas. No. 11,272..73, 84
Poorman v. Mitchell, 48 Mo. 45..... 536
Port Carbon Iron Co. v. Groves, 68 Pa. St. 149..... 443
Potter v. Beal, 2 C. C. A. 60, 50 Fed. 860.. 197
Powell v. Construction Co., 88 Tenn. 692, 13 S. W. 691..... 264
Pratt v. Godwin, 61 Tex. 334..... 373
President, Directors & Co. of Augusta Bank v. Hamlin, 14 Mass. 178, 180..... 599
Price v. Pankhurst, 3 C. C. A. 551, 53 Fed. 312..... 596
Pringle v. Woolworth, 90 N. Y. 502, 511... 481
Proctor v. Bennis, 36 Ch. Div. 740..... 637
Providence Life Ins. & Inv. Co. v. Martin, 32 Md. 310, 312..... 318
Puget Sound Agricultural Co. v. Pierce Co., 1 Wash. T. 159, 168..... 588
Puget Sound Nat. Bank v. Mather (Minn.) 62 N. W. 396..... 538
Pullman v. Upton, 96 U. S. 228, 330..... 445
Pym v. Campbell, 6 El. & Bl. 370, 373.... 213

Quarman v. Burnett, 6 Mees. & W. 499, 507 265
Quincy Horse-Railway & Carrying Co. v. Gnuse, 137 Ill. 264, 27 N. E. 190..... 293

Railroad Co. v. Fraloff, 100 U. S. 24, 31.. 292
Railway Co. v. Allerton, 18 Wall. 233, 236 429, 431
Ralli v. Troop, 157 U. S. 386, 15 Sup. Ct. 657 188
Randall v. Railroad Co., 109 U. S. 478, 482, 3 Sup. Ct. 324, 332.....93, 311
Ratcliff's Case, 9 State Tr. 582..... 368
Read v. Gas Co., 9 Heisk. 545-553..... 429
Real v. Honey, 39 Neb. 516, 520, 58 N. W. 136 583
Rector v. Ashley, 6 Wall. 142..... 401
Redfield v. Parks, 132 U. S. 239, 10 Sup. Ct. 83..... 400
Reed v. U. S., 11 Wall. 591..... 187
Reeside, The, 2 Sumn. 567, Fed. Cas. No. 11,657 48
Rice v. Sanger, 144 U. S. 197, 12 Sup. Ct. 664 450
Rich v. Coe, Cowp. 636..... 456
Richards v. Borowsky, 39 Neb. 774, 58 N. W. 277..... 583
Richardson v. City of Boston, 148 Mass. 508, 20 N. E. 166..... 588
Richmond & D. R. Co. v. Powers, 149 U. S. 43, 13 Sup. Ct. 748..... 311
Riddle v. Hudgins, 7 C. C. A. 335, 58 Fed. 490 81
Riddle v. Norris, 46 Mo. App. 512..... 81
Riggs v. Johnson Co., 6 Wall. 166, 196.... 534
Roberts, Ex parte, 15 Wall. 384..... 68
Roberts v. Drehmer, 41 Neb. 306, 310, 59 N. W. 911..... 583
Robertson v. Hedden, 40 Fed. 322..... 348
Robertson v. Salomon, 130 U. S. 412, 9 Sup. Ct. 559.....5, 610
Robinson v. Greenville, 42 Ohio St. 625... 239
Rockaway, The, 19 Fed. 449..... 358
Rockwell v. Taylor, 41 Conn. 55, 59..... 293
Rodermund v. Clark, 46 N. Y. 354..... 537
Rogers v. Odell, 39 N. H. 452..... 536
Rogers v. Rogers, 53 Conn. 121, 1 Atl. 807, 5 Atl. 675..... 179

Digitized by Google

Page
Rosenbaum v. Bauer, 120 U. S. 450, 7 Sup. Ct. 633 481
Roslyn, The, 22 Fed. 687 270
Rourke v. Colliery Co., 2 C. P. Div. 205 .. 264
Rouse v. Letcher, 156 U. S. 49, 50, 15 Sup. Ct. 266 82
Rowell v. Lindsay, 113 U. S. 101, 5 Sup. Ct. 507 129
Russell v. Farley, 105 U. S. 433, 437, 441, 442 ..... 84, 584
Rutherford v. Greene's Heirs, 2 Wheat. 196 160
Rutherford v. Insurance Co., 1 Fed. 456 .. 327
R. W. Rogers Co. v. Manufacturing Co., 17 C. C. A. 576, 579, 70 Fed. 1017 .... 173, 179
Ryckman v. Parkins, 5 Paige, 545 .... 509, 510

Sage v. Railroad Co., 125 U. S. 361, 8 Sup. Ct. 887 505
St. Jago de Cuba, The, 9 Wheat. 416 192
St. Louis, I. M. & S. R. Co. v. Express Co., 108 U. S. 24, 2 Sup. Ct. 6 62
St. Louis, I. M. & S. R. Co. v. Spencer, 18 C. C. A. 114, 71 Fed. 93 596
St. Louis Trust Co. v. Riley, 16 C. C. A. 610, 70 Fed. 32 512
St. Louis & S. F. R. Co. v. Bennett's Adm'x, 16 C. C. A. 300, 69 Fed. 525 560
St. Louis & S. F. R. Co. v. Brown's Adm'r, 16 C. C. A. 682, 69 Fed. 530 560
St. Louis & S. F. R. Co. v. Miles, 24 C. C. A. 559, 79 Fed. 257 564
St. Louis & S. F. R. Co. v. Spoon's Adm'r, 16 C. C. A. 680, 69 Fed. 531 560
Sam Sloan, The, 65 Fed. 125-127 50
Samuel Marshall, The, 4 C. C. A. 385, 392, 54 Fed. 396, 403 ..... 455, 456, 460
Sanford Fork & Tool Co., In re, 160 U. S. 247, 259, 16 Sup. Ct. 291 63
Santa Claus, The, Fed. Cas. No. 12,327 ... 358
Sargent v. Webster, 13 Metc. (Mass.) 497 220
Sawyer v. Hoag, 17 Wall. 610 475
Scheuer v. Miller, 20 C. C. A. 165 173
Schiedam, The, 48 Fed. 923 462
Schindelholz v. Cullum, 5 C. C. A. 293, 55 Fed. 885 59
Schofield v. Railway Co., 114 U. S. 615, 619, 5 Sup. Ct. 1125 311
Scovill v. Thayer, 105 U. S. 143, 149 .... 428, 445, 475
Scruggs v. Railroad Co., 108 U. S. 368-375, 2 Sup. Ct. 780 297
Scull v. Raymond, 18 Fed. 547 191
Security Bank of Minnesota v. Beede, 37 Minn. 527, 35 N. W. 435 625
Security Ins. Co. v. Fay, 22 Mich. 467 246
Seeberger v. Farwell, 139 U. S. 608, 11 Sup. Ct. 650 351
Seignouret v. Insurance Co., 24 Fed. 332 .. 431
Seitz v. Machine Co., 141 U. S. 510, 12 Sup. Ct. 46 443
Selah, The, 4 Sawy. 40, Fed. Cas. No. 12,-636 647
Senior v. Ratterman, 44 Ohio St. 661, 11 N. E. 321 290
Sercomb v. Catlin, 128 Ill. 556, 21 N. E. 606 59
Seymour v. Harrow Co., 81 Ala. 250, 1 South. 45 299
Seymour v. Osborne, 11 Wall. 516 8
Shafer v. Lacock, 168 Pa. St. 497, 32 Atl. 44 293

Page
Sharon v. Terry, 36 Fed. 337, 359, 360 .. 534, 536
Shattuck v. Railroad Co., 6 Allen, 115-117 302
Shaver v. Pennsylvania Co., 71 Fed. 931 .. 288, 289
Sherlock v. Alling, 93 U. S. 99, 104 285
Sherman v. Elder, 24 N. Y. 381 3
Shickle v. Watts, 94 Mo. 410, 7 S. W. 274 .. 475
Shipp v. Williams, 10 C. C. A. 252, 253 146
Shumacher v. Cornell, 96 U. S. 549 129
Silliman v. Gammage, 55 Tex. 369 504
Simmons v. Railway Co., 159 U. S. 291, 16 Sup. Ct. 1 72
Simpson v. Holliday, 13 Wkly. Rep. 577 .. 387
Simpson v. Railway Co., 89 Tenn. 308, 15 S. W. 735 342
Smith v. Alabama, 124 U. S. 465, 8 Sup. Ct. 564 285
Smith v. The Creole, 2 Wall. Jr. 485, Fed. Cas. No. 13,033 188
Smith v. Goldsworthy, 4 Adol. & E. (N. S.) 430 431
Smith v. Lawson, 18 W. Va. 212, 228 599
Smith v. Nichols, 21 Wall. 112, 119 .... 137, 615
Smith v. Rines, 2 Sumn. 338, Fed. Cas. No. 13,100 609
Snow v. Booth, 2 Kay & J. 132 214
Society of Shakers v. Watson, 15 C. C. A. 632, 68 Fed. 730 207
Somerset & K. R. Co. v. Cushing, 45 Me. 524-532 432
Souter v. Railroad, Woolw. 80, 85, Fed. Cas. No. 13,180 505
Southard v. Assurance Co., 34 Conn. 574 .. 316
Southern Pac. Co. v. Pool, 160 U. S. 438, 16 Sup. Ct. 338 326
Sparf v. U. S., 156 U. S. 51, 99, 15 Sup. Ct. 273 311
Sparks v. Purdy, 11 Mo. 219, 223 106
Spiro v. Felton, 73 Fed. 91 325
Stafford v. Brown, 4 Paige, 88 274
Standard Oil Co. v. Hawkins, 20 C. C. A. 468, 74 Fed. 395 215
Standley v. Roberts, 8 C. C. A. 305, 59 Fed. 836 536
Stanton v. Embrey, 93 U. S. 548 535
Stapley v. Railway Co., L. R. 1 Exch. 21 .. 255
Starcke v. Klein, 14 C. C. A. 672 144
Star of Hope, The, 9 Wall. 203 462
State v. Caffee, 6 Ohio, 150 253
State v. Dalrymple (N. J. Sup.) 28 Atl. 671 592
State v. Molisse, 38 La. Ann. 381 293
State v. Nelson, 52 Ohio St. 88, 97, 39 N. E. 22 289
State v. Turnpike Co., 37 Ohio St. 481 290
State v. William Deering & Co. (Minn.) 57 N. W. 313 592
Stewart v. Salamon, 97 U. S. 361 63
Stockmeyer v. Reed, 55 Fed. 259 291
Story v. Livingston, 13 Pet. 359 468
Straus v. Weil, 5 Cold. 126, 127 342
Strong v. Taylor, 82 Ala. 213, 2 South. 760 509
Stuart v. Hayden, 18 C. C. A. 618, 72 Fed. 402 368
Sturr v. Beck, 133 U. S. 541, 10 Sup. Ct. 350 544-547
Suffolk Co. v. Hayden, 3 Wall. 315, 320 .. 379
Sunflower Oil Co. v. Wilson, 142 U. S. 313, 12 Sup. Ct. 235 440
Sunnyside, The, 91 U. S. 208, 222, 223 .. 54, 269

Digitized by Google

Page
Sun Printing & Pub. Ass'n v. Smith, 5 C. C. A. 91, 55 Fed. 240 334
Sutherland v. Olcott, 95 N. Y. 94 431
Svend, The, 1 Fed. 58 48
Swan v. Middlesex Co., 101 Mass. 173, 178 302
Swift v. Herrera, 9 Tex. 263 575
Swift v. Smith, 102 U. S. 442 91

Tate v. Holmes, 22 C. C. A. 466, 76 Fed. 664 475
Tayloe v. Insurance Co., 9 How. 406 521
Taylor v. Carryl, 20 How. 583, 596, 597 534
Taylor v. Taylor, 8 How. 183; 10 Minn. 108, 126 (Gil. 81) 214, 611
Taylor-Craig Corporation v. Hage, 16 C. C. A. 339, 69 Fed. 581 593
Teal v. Walker, 111 U. S. 249, 250, 251, 4 Sup. Ct. 424, 425 505
Telfener v. Russ, 16 Sup. Ct. 695 688
Terre Haute & I. R. Co. v. Struble, 109 U. S. 381, 3 Sup. Ct. 270 100
Terry v. Munger, 121 N. Y. 161, 24 N. E. 272 537
Terry v. Sharon, 131 U. S. 40, 9 Sup. Ct. 705 421
Texas & P. R. Co. v. Anderson, 149 U. S. 237, 242, 13 Sup. Ct. 843 63
Texas & P. Ry. Co. v. Cox, 145 U. S. 593, 12 Sup. Ct. 905 450
Thatcher Heating Co. v. Burtis, 121 U. S. 286, 7 Sup. Ct. 1034 46
Thomas v. Bank (Neb.) 58 N. W. 943 600
Thomas v. Car Co., 149 U. S. 95, 13 Sup. Ct. 824 ..... 440, 492, 493
Thomas v. Osborn, 19 How. 22 ..... 192, 643
Thompson v. Bank, 19 Nev. 103, 7 Pac. 68 475
Thompson v. Howard, 31 Mich. 309 537
Thompson v. Insurance Co., 136 U. S. 287, 297, 10 Sup. Ct. 1019 312
Thompson v. Railroad Co., 132 U. S. 68, 10 Sup. Ct. 29 495
Thorne v. Insurance Co., 80 Pa. St. 15 12
Thorp v. Hammond, 12 Wall. 410 192
Tilghman v. Proctor, 102 U. S. 707; 125 U. S. 136, 8 Sup. Ct. 894 ..... 65, 298, 637
Toledo, D. & B. R. Co. v. Hamilton, 134 U. S. 296, 10 Sup. Ct. 546 495
Toler v. Railroad Co., 67 Fed. 168-174 ..... 272, 279
Town of Hartland v. Hackett, 57 Vt. 96 537
Tracy v. Reed, 38 Fed. 69, 74 588
Travellers' Ins. Co. v. McConkey, 127 U. S. 661, 666, 8 Sup. Ct. 1360 312
Travelers' Ins. Co. v. Melick, 12 C. C. A. 544, 65 Fed. 178 657
Travelers' Ins. Co. of Hartford v. Randolph, 24 C. C. A. 305, 78 Fed. 754 ..... 320, 321, 328
Truly v. Wanzer, 5 How. 142, 143 84
Trustees v. Greenough, 105 U. S. 527 ..... 509, 511
Turley v. Turley, 85 Tenn. 251, 1 S. W. 891 298
Turner v. Bank, 26 Iowa, 562 480
Two Hundred Chests of Tea, 9 Wheat. 430 5
Tyler Min. Co. v. Sweeney, 4 C. C. A. 329, 54 Fed. 284 581

Ulman v. Ritter, 72 Fed. 1000 72
Union Cent. Life Ins. Co. v. Cheever, 36 Ohio St. 201, 207 293
Union Ins. Co. v. U. S., 6 Wall. 759, 764 324

Page
Union Mut. Life Ins. Co. v. Kirchoff, 160 U. S. 374, 16 Sup. Ct. 318 450
Union Mut. Life Ins. Co. v. University of Chicago, 6 Fed. 443 534
Union Nat. Bank v. Byram (Ill. Sup.) 22 N. E. 842 538
Union Pac. Ry. Co. v. Callaghan, 161 U. S. 91, 95, 16 Sup. Ct. 493 310
Union Stock Yards & Transit Co. v. Western Land & Cattle Co., 7 C. C. A. 660, 59 Fed. 49 110
Union Trust Co. v. Railroad Co., 6 Biss. 197, 24 Fed. Cas. 704; 117 U. S. 434, 6 Sup. Ct. 809 ..... 484, 534
U. S. v. Ady, 22 C. C. A. 223, 76 Fed. 359 650
U. S. v. Breed, 1 Sumn. 159, Fed. Cas. No. 14,638 ..... 5, 609, 610
U. S. v. Clark Co., 96 U. S. 211 261
U. S. v. Griffith, 141 U. S. 212, 11 Sup. Ct. 1005 648
U. S. v. Herrman, 5 C. C. A. 582, 56 Fed. 477 610
U. S. v. Jahn, 155 U. S. 109, 15 Sup. Ct. 39 197
U. S. v. King, 7 How. 854 377
U. S. v. Leggett, 13 C. C. A. 418, 66 Fed. 300 128
U. S. v. McMahon, 164 U. S. 81, 17 Sup. Ct. 28 649
U. S. v. Matheson, 4 C. C. A. 3, 56 Fed. 482 605
U. S. v. Railroad Co., 18 How. 241, 242, 91 U. S. 72 ..... 611, 648
U. S. v. Rodgers, 150 U. S. 249, 14 Sup. Ct. 109 356
U. S. v. Roessler & Hasslacher Co., 4 C. C. A. 1, 56 Fed. 481 605
U. S. v. Schoverling, 146 U. S. 76, 13 Sup. Ct. 24 ..... 351, 352
U. S. v. Shea, 152 U. S. 178, 14 Sup. Ct. 519 188
U. S. v. Thompson, 98 U. S. 486 401
U. S. v. Van Blankensteyn, 5 C. C. A. 579, 56 Fed. 474 115
U. S. v. Vowell, 5 Cranch, 368 126
United States Mut. Acc. Ass'n v. Robinson, 20 C. C. A. 262, 74 Fed. 10 593
United States Nat. Bank v. Bank, 13 C. C. A. 472, 64 Fed. 985 597

Van Buren v. Olmstead, 5 Paige, 9 298
Vance v. Corrigan, 78 Mo. 94 588
Vandine v. Burpee, 13 Metc. (Mass.) 288 302
Van Houten v. Insurance Co., 68 N. W. 982 248
Veeder v. Mudgett, 95 N. Y. 295 434
Vermont & C. R. Co. v. Vermont Cent. R. Co., 46 Vt. 792 59
Vestal v. Morris, 11 Wash. 452, 39 Pac. 960 596
Vicksburg & M. R. Co. v. O'Brien, 119 U. S. 99, 105, 7 Sup. Ct. 118 ..... 292, 293
Vinton v. Hamilton, 104 U. S. 485 46
Von Wettberg v. Carson, 44 Conn. 289 625
Voorhies v. Hennessy, 7 Wash. 243, 34 Pac. 931 590
Voss v. Fisher, 113 U. S. 213, 5 Sup. Ct. 511 129

Waddingham v. Dickson, 17 Colo. 223, 29 Pac. 177 590
Waldele v. Railroad Co., 95 N. Y. 274 293
Waldron v. Willard 17 N. Y. 467 3

Digitized by Google

Page
Walker v. Boston, 8 Cush. 279..... 302
Walker v. State, 102 Ind. 502, 1 N. E. 856 299
Wallace v. McConnell, 13 Pet. 135..... 534
Wallis v. Littell, 11 C. B. (N. S.) 369..... 213
Ware v. Allen, 128 U. S. 590, 9 Sup. Ct. 174 213
Warner v. Mower, 11 Vt. 385..... 220
Warren v. Burt, 7 C. C. A. 105, 58 Fed. 101 65
Warren v. King, 108 U. S. 389, 2 Sup. Ct. 789 277-279
Warren v. Wheeler, 21 Me. 484..... 303
Washington R. Co. v. Bradleys, 10 Wall. 299 363
Watts v. Camors, 10 Fed. 148..... 647
Wayman v. Southard, 10 Wheat. 1..... 469
Webb v. Railway Co., 88 Tenn. 128, 12 S. W. 428..... 324
Wells v. Armstrong, 29 Fed. 217..... 359
Wells v. Tolman (Sup.) 34 N. Y. Supp. 840, 843 583
Wendover v. Hogeboom, 7 Johns. 308..... 458
Werner v. Charleston, 151 U. S. 360, 14 Sup. Ct. 356..... 450
West v. Smith, 101 U. S. 263-271..... 110
Westcott v. Edmunds, 68 Pa. St. 34..... 536
Western Div. of Western N. C. R. Co. v. Drew, 3 Woods, 691, Fed. Cas. No. 17,-424 469
Western Electric Manuf'g Co. v. Copper Co., 114 U. S. 447, 5 Sup. Ct. 941..... 180
Western Land & Cattle Co. v. Hall, 33 Fed. 236..... 106
Western Nat. Bank v. Armstrong, 152 U. S. 346, 14 Sup. Ct. 572..... 601
Western Union Tel. Co. v. James, 162 U. S. 650, 662, 16 Sup. Ct. 934..... 285
West St. Louis Sav. Bank v. Bank, 95 U. S. 557, 559..... 601
Wharton v. Fisher, 2 Serg. & R. 182..... 625
White, In re, 53 Fed. 787..... 115
White v. Bower, 48 Fed. 186..... 363
White v. Burnley, 20 How. 247..... 575
White v. Ewing, 159 U. S. 36, 15 Sup. Ct. 1013 427
Whiteley v. Trust Co., 22 C. C. A. 67, 76 Fed. 74..... 512
Whiting v. Society, 8 C. C. A. 558, 60 Fed. 197 299
Whitman v. Railroad Co., 7 Allen, 316... 302
Wild v. Bank, 3 Mason, 505, Fed. Cas. No. 17,646 600

Page
Wilkinson v. Bauerle, 41 N. J. Eq. 635, 7 Atl. 514..... 220
William Rogers Manuf'g Co. v. Manuf'g Co., 11 Fed. 495..... 178
Wm. Rogers Manuf'g Co. v. Simpson, 54 Conn. 527, 9 Atl. 395..... 179
Williams v. Gibbes, 17 How. 239..... 424
Williams v. Hadley, 21 Kan. 350..... 625
Williams v. Morgan, 111 U. S. 684, 4 Sup. Ct. 638..... 82
Williams v. Traphagen, 38 N. J. Eq. 57.. 475
Wilson v. Ass'n, 53 Minn. 470, 479, 55 N. W. 626..... 319
Wilson v. Pauly, 18 C. C. A. 475, 72 Fed. 129 341
Wilson v. Powers, 131 Mass. 539..... 213
Wilson v. Rastall, 4 Term R. 753..... 368
Winans v. Denmead, 15 How. 330..... 637
Winnipiseogee Paper Co. v. Town of Northfield (N. H.) 29 Atl. 453..... 591
Winslow v. Tarbox, 18 Me. 132.....455, 458
Wisconsin Cent. R. Co. v. U. S., 164 U. S. 190, 212, 17 Sup. Ct. 45..... 650
Wiswall v. Sampson, 14 How. 52..... 534
Wood v. Collins, 8 C. C. A. 525, 60 Fed. 142 363
Wood v. Railroad Co., 70 Fed. 743..... 494
Wood v. Weimar, 104 U. S. 786, 792..... 584
Woodruff v. Parham, 8 Wall. 138..... 100
Woods v. Morrell, 1 Johns. Ch. 105..... 274
Woodward v. Baird, 43 Neb. 310, 317, 61 N. W. 612..... 583
Worsham v. Chisum (Tex. Civ. App.) 28 S. W. 905..... 578
Worsham v. Morgan (Tex. Civ. App.) 28 S. W. 918..... 578
Worthington v. Abbott, 124 U. S. 434, 8 Sup. Ct. 562..... 610
Worthington v. Robbins, 139 U. S. 341, 11 Sup. Ct. 583..... 351
Wray v. Hutchinson, 2 Mylne & K. 235... 521
Wright v. Mattison, 18 How. 50, 57...400, 401
Wyman v. Railroad Co., 13 Metc. (Mass.) 326 302

York v. Texas, 137 U. S. 15, 11 Sup. Ct. 9.. 341
Young v. Iron Co., 85 Tenn. 189, 2 S. W. 202 434

Zimpelman v. Hipwell, 4 C. C. A. 609, 54 Fed. 848..... 100

Digitized by Google

CASES

IN THE UNITED STATES CIRCUIT COURTS OF APPEALS WHICH HAVE BEEN PASSED UPON BY THE SUPREME COURT OF THE UNITED STATES.

Camfield v. United States.....13 C. C. A. 359

Appeal. Decree of circuit court of appeals affirmed, May 24, 1897. 17 Sup. Ct. 864, 167 U. S. 518.

Compton v. Jesup.....15 C. C. A. 397

Certified to supreme court. Questions certified determined by supreme court, May 10, 1897. 17 Sup. Ct. 795, 167 U. S. 1.

Cross v. Evans.....20 C. C. A. 679

Certified to supreme court. Questions certified determined by supreme court, May 10, 1897. 17 Sup. Ct. 733, 167 U. S. 60.

Enterprise Min. Co. v. Rico-Aspen Consol. Min. Co.....13 C. C. A. 390

Writ of certiorari. Affirmed, May 10, 1897. 17 Sup. Ct. 762, 167 U. S. 108.

Interstate Commerce Commission v. Detroit, G. H. & M. Ry. Co..21 C. C. A. 103

Appeal. Decree of circuit court of appeals affirmed, May 24, 1897. 17 Sup. Ct. 986, 167 U. S. 633.

London Assurance v. Companhia De Moagens Do Barreiro....15 C. C. A. 379

Writ of certiorari. Affirmed, May 10, 1897. 17 Sup. Ct. 785, 167 U. S. 150.

Parsons v. Chicago & N. W. Ry. Co.....11 C. C. A. 489

Writ of error. Judgment affirmed, May 24, 1897. 17 Sup. Ct. 887, 167 U. S. 447.

St. Joseph & G. I. R. Co. v. Steele.....11 C. C. A. 470

Appeal. Decree of circuit court of appeals reversed, May 24, 1897. 17 Sup. Ct. 925, 167 U. S. 659.

Stone v. United States.....12 C. C. A. 451

Writ of error. Judgment affirmed, May 10, 1897. 17 Sup. Ct. 778, 167 U. S. 193.

Tindal v. Wesley.....13 C. C. A. 160

Writ of certiorari. Affirmed, May 10, 1897. 17 Sup. Ct. 770, 167 U. S. 204.

United States v. American Bell Tel. Co.....15 C. C. A. 569

Appeal. Decree of circuit court of appeals affirmed, May 10, 1897. 17 Sup. Ct. 809, 167 U. S. 224.

United States v. Reed..... 9 C. C. A. 563

Appeal. Decree of circuit court of appeals affirmed, May 24, 1897. 17 Sup. Ct. 919, 167 U. S. 664.

United States v. Reed.....13 C. C. A. 682

Appeal. Decree of circuit court of appeals affirmed, May 24, 1897. 17 Sup. Ct. 919, 167 U. S. 664.

Valencia, The, v. Ziegler.....24 C. C. A. 692

Certified to supreme court. Questions certified determined by supreme court, February 1, 1897. 17 Sup. Ct. 323, 165 U. S. 264.

Yardley v. Philler.....10 C. C. A. 562

Appeal. Decree of circuit court of appeals reversed, May 24, 1897. 17 Sup. Ct. 835, 167 U. S. 344.

Digitized by Google

CASES

In the United States Circuit Courts of Appeals in which Rehearings have been Granted or Denied.

Colorado Pav. Co. v. Murphy.....23 C. C. A. 631
Rehearing denied, May 6, 1897.

Hazzard v. Fitzhugh.....24 C. C. A. 232
Rehearing denied, January 26, 1897.

Kingman v. Western Manuf'g Co.....24 C. C. A. 684
Rehearing denied, September 21, 1896.

National Acc. Soc. v. Spiro.....24 C. C. A. 334
Rehearing denied, May 4, 1897.

Russ v. Teifener.....24 C. C. A. 688
Rehearing denied, January 26, 1897.

Staberg v. Oliver Min. Co.....24 C. C. A. 689
Rehearing denied, May 6, 1897.

Digitized by Google

Digitized by Google

INDEX TO NOTES.

VOLUMES 1–24.

ACTIONS.
Against counties—Jurisdiction. 1 C. C. A. 514.
On insurance policy—Time of bringing suit. 2 C. C. A. 473.
Forms of action in federal courts. 5 C. C. A. 594.

ADMIRALTY.
Nature of hearing on appeal—Admission of new proof. 3 C. C. A. 322.
Jurisdiction as to matters of contract. 18 C. C. A. 347.
Jurisdiction to enforce liens under state laws. 21 C. C. A. 21.

ADVERSE POSSESSION.
Tax deed as color of title. 24 C. C. A. 402.

ALIENS.
Citizenship under state and federal laws. 6 C. C. A. 37.

APPEAL.
What decrees are final. 2 C. C. A. 379.
In admiralty—New proofs. 3 C. C. A. 322.
Review of previous decisions as to validity of patents in circuit court of appeals. 3 C. C. A. 565.
Review of interlocutory decree granting or refusing injunction in patent case in circuit court of appeals. 3 C. C. A. 572; 7 C. C. A. 196.
When may be aided by mandamus. 10 C. C. A. 450.
Finality of judgments and decrees for purposes of review. 17 C. C. A. 238.

APPEARANCE.
Effect of. 5 C. C. A. 594.

ARBITRATION.
As a condition of an insurance policy. 9 C. C. A. 628.

ARBITRATION AND AWARD.
Setting aside an award for interest, prejudice, or misconduct of arbitrator. 12 C. C. A. 592.

ARGUMENTS.
Of counsel. 13 C. C. A. 589.

ASSIGNEES.
Citizenship as affecting the jurisdiction of the federal courts. 10 C. C. A. 254.

ASSIGNMENT.
Of right to use name as trade-mark. 17 C. C. A. 579.
Of claims against the United States and government contracts. 22 C. C. A. 650.

ASSIGNMENT FOR BENEFIT OF CREDITORS.
Power of corporation to make. 24 C. C. A. 221.

ATTACHMENT.
Issuance—Following state practice. 5 C. C. A. 594.

ATTORNEY AND CLIENT.
Arguments of counsel. 13 C. C. A. 589.

AWARD.
Setting aside for interest, prejudice, or misconduct of arbitrator. 12 C. C. A. 592.

BAGGAGE.
Responsibility of sleeping-car companies for baggage and valuables. 10 C. C. A. 338.

BANKS AND BANKING.
Who liable as shareholders in national banks. 15 C. C. A. 130.

BILLS OF LADING.
Perils of the sea. 19 C. C. A. 465.

CANCELLATION.
Of patent to public land. 22 C. C. A. 38.

CARRIERS.
Duty to protect passengers from dangerous fellow passengers. 4 C. C. A. 231.
Right to restrain or expel disorderly passenger. 4 C. C. A. 231.
Duties and liabilities of sleeping-car companies. 10 C. C. A. 335.
Liability for injuries caused by negligence or torts of servants. 10 C. C. A. 466.
Duty to stop trains at station. 14 C. C. A. 362.
Quick dispatch. 14 C. C. A. 657.
Who are common carriers of goods. 20 C. C. A. 521.

Digitized by Google

CERTIORARI.
From supreme court. 1 C. C. A. 5.

CHARTER.
Implied warranty of seaworthiness. 15 C. C. A. 388.

CHATTEL MORTGAGES.
Controlling effect of state decisions in United States courts. 11 C. C. A. 88.

CHILD.
Death of parent by wrongful act—Damages. 1 C. C. A. 34.

CHINESE.
Citizenship. 1 C. C. A. 212.

CIRCUIT COURTS OF APPEALS.
Orders, decrees, and judgments reviewable. 13 C. C. A. 374.

CITIZENSHIP.
Of Chinese. 1 C. C. A. 212.
Of aliens under state and federal laws. 6 C. C. A. 37.
Of corporations. 6 C. C. A. 174.
Diverse citizenship as a ground of federal jurisdiction. 10 C. C. A. 249.

COLLISION.
As a peril of the sea. 19 C. C. A. 468.

COLOR OF TITLE.
Tax deed as color of title. 24 C. C. A. 402.

COMMERCE.
Interference with interstate or foreign commerce. 24 C. C. A. 13.

CONSTITUTIONAL LAW.
Due process of law in revenue proceedings. 8 C. C. A. 398.
Regulation of commerce by taxation. 8 C. C. A. 492.
Restrictions on grants. 14 C. C. A. 6.
Limitations of taxing power. 23 C. C. A. 515.
Interference with interstate or foreign commerce. 24 C. C. A. 13.

CONTRACT LABOR.
Importation of. 1 C. C. A. 52.

CONTRACTS.
Implied obligation to pay for benefits received. 2 C. C. A. 488.
Validity as affected by public policy. 9 C. C. A. 666.
Relating to use of trade-name. 14 C. C. A. 104.
Mutuality in. 15 C. C. A. 543.
Intent as an element in offer and acceptance. 16 C. C. A. 199.
Admiralty jurisdiction over. 18 C. C. A. 347.
Of common carriers. 20 C. C. A. 521.

CONTRIBUTION.
On marine loss. 20 C. C. A. 357.

COPYRIGHTS.
Laches as a defense in suits for infringement. 22 C. C. A. 211.

CORPORATIONS.
Citizenship for purposes of federal jurisdiction. 6 C. C. A. 174.
Status of foreign corporations. 7 C. C. A. 419.
Dissolution of foreign corporation. 7 C. C. A. 421.
Personal liability of directors for negligence. 12 C. C. A. 680.
The power of officers and directors in their individual capacity to deal with corporation. 13 C. C. A. 466.
Stockholders' liability to creditors in equity. 23 C. C. A. 315.
Exclusion, regulation, and taxation of foreign corporations. 24 C. C. A. 13.
Power to assign for benefit of creditors. 24 C. C. A. 221.

COSTS.
Right to costs in equity. 17 C. C. A. 368.

COURT OF APPEALS.
Certiorari to. 1 C. C. A. 5.
Jurisdiction. 1 C. C. A. 6.

COURTS.
Jurisdiction to review interlocutory decree as to injunction in patent case. 3 C. C. A. 572.
Following state practice in common-law actions. 5 C. C. A. 594; 9 C. C. A. 548.
Jurisdiction of federal courts over corporations. 6 C. C. A. 174.
Diverse citizenship as a ground of federal jurisdiction. 10 C. C. A. 249.
State laws as rules of decision in federal courts. 11 C. C. A. 71.
Jurisdiction of United States courts. 11 C. C. A. 308.
Jurisdiction and judgments of Indian courts. 11 C. C. A. 468.
Federal jurisdiction of suits against state. 13 C. C. A. 165.
Orders, decrees, and judgments reviewable in circuit court of appeals. 13 C. C. A. 374.
Jurisdiction as affected by possession of the subject-matter. 15 C. C. A. 6.
Enjoining proceedings in state courts. 16 C. C. A. 90.
Jurisdiction of United States circuit court. 16 C. C. A. 507; 19 C. C. A. 75.
Jurisdiction of state courts to enforce maritime liens under state laws. 21 C. C. A. 21.
Conclusiveness of judgments as between federal and state courts. 21 C. C. A. 478.
Conflicts of jurisdiction between federal and state courts. 22 C. C. A. 356.
Jurisdiction in foreclosure of federal courts. 24 C. C. A. 523.

CREDIT INSURANCE. 19 C. C. A. 271.

Digitized by Google

CUSTOMS DUTIES.
Interpretation of commercial and trade terms in tariff laws. 18 C. C. A. 545.
DAMAGES.
For death by wrongful act. 1 C. C. A. 33.
Mental suffering as an element of damage. 11 C. C. A. 556.
In actions against telegraph companies. 15 C. C. A. 235.
In condemnation proceedings. 16 C. C. A. 468.
DEATH BY WRONGFUL ACT.
Damages. 1 C. C. A. 33.
Statutory provisions. 1 C. C. A. 33.
DEMURRAGE.
Quick dispatch. 14 C. C. A. 657.
Definition and general principles. 21 C. C. A. 337.
DEPOSITION.
Examinations before trial. 5 C. C. A. 594.
DISCOVERY.
Examination of party before trial. 5 C. C. A. 594.
DISSOLUTION.
Of foreign corporations. 7 C. C. A. 421.
DOMICILE.
Effect of change of domicile on the citizenship of a party. 10 C. C. A. 251.
DOWER.
How inchoate right extinguished. 3 C. C. A. 316.
In mines. 3 C. C. A. 316.
What estate subject to dower. 3 C. C. A. 316.
Divestiture of inchoate right by legislative action. 4 C. C. A. 295.
EMINENT DOMAIN.
Consequential and indirect damages. 16 C. C. A. 468.
EQUITY.
Jurisdiction of federal courts. 1 C. C. A. 514.
Right to costs. 17 C. C. A. 368.
Equitable mortgages. 18 C. C. A. 458.
Stockholders' liability to creditors of corporation. 23 C. C. A. 315.
ESTOPPEL.
As against state or United States. 16 C. C. A. 353.
EVIDENCE.
Rules of evidence in federal courts—Following state practice. 5 C. C. A. 594.
Excluded from bill of exceptions. 14 C. C. A. 248.
Expert testimony. 20 C. C. A. 180.
EXCEPTIONS, BILL OF.
Time of filing—When regulated by state practice. 5 C. C. A. 594.
EXCEPTIONS, BILL OF—Cont'd.
Exclusion of evidence. 14 C. C. A. 248.
EXECUTION.
Supplementary proceedings—Following state practice. 5 C. C. A. 594.
EXECUTORS AND ADMINISTRATORS.
Citizenship as affecting the jurisdiction of the federal courts. 10 C. C. A. 252.
EXTINGUISHMENT.
Of maritime liens. 17 C. C. A. 102.
FEDERAL COURTS.
Jurisdiction as affected by state laws. 1 C. C. A. 513.
Following state practice. 5 C. C. A. 594.
Jurisdiction. 11 C. C. A. 308; 13 C. C. A. 165.
Enjoining proceedings in state courts. 16 C. C. A. 90.
Effect of state decisions as to constitutionality of statute. 21 C. C. A. 21.
Enforcing liens created by state laws. 21 C. C. A. 21.
Conclusiveness of judgment between federal and state courts. 21 C. C. A. 478.
Conflict of jurisdiction with state courts. 22 C. C. A. 356.
Jurisdiction in mortgage foreclosure. 24 C. C. A. 523.
FEDERAL QUESTIONS.
As conferring jurisdiction on United States courts. 11 C. C. A. 308.
FELLOW SERVANTS.
Who are. 8 C. C. A. 668; 9 C. C. A. 596.
FIDELITY INSURANCE. 19 C. C. A. 273.
FIRES.
As a peril of the sea. 19 C. C. A. 472.
FOREIGN CORPORATIONS.
Status under the rule of comity. 7 C. C. A. 419.
Dissolution. 7 C. C. A. 421.
FRAUD.
Fraudulent use of trade-mark. 17 C. C. A. 579, 657.
In use of trade-marks and trade-names. 20 C. C. A. 165.
GENERAL AVERAGE.
Marine insurance. 20 C. C. A. 357.
GUARANTY INSURANCE. 19 C. C. A. 271.
GUARDIAN AND WARD.
Citizenship as affecting the jurisdiction of the federal courts. 10 C. C. A. 253.
HUSBAND AND WIFE.
Liability of husband for negligence of wife. 12 C. C. A. 196.

Digitized by Google

IMMIGRATION.
Contract labor. 1 C. C. A. 52.

IMPORTATION.
Of contract labor. 1 C. C. A. 52.

INDIANS.
Jurisdiction and judgments of Indian courts. 11 C. C. A. 468.

INFRINGEMENT.
Of patents, copyrights, and trademarks, laches as a defense. 22 C. C. A. 211.

INJUNCTION.
Restraining proceedings in state courts. 16 C. C. A. 90.

INSANITY.
Effect on the question of suicide. 16 C. C. A. 623.

INSURANCE.
Conditions as to time for bringing suit. 2 C. C. A. 473.
Effect of disability to sue on limitations of policy. 2 C. C. A. 473.
Estoppel of company to set up limitation of action. 2 C. C. A. 473.
Limitation of time for bringing suit. 2 C. C. A. 473.
Time when limitation of action begins to run. 2 C. C. A. 473.
Waiver of limitations by company. 2 C. C. A. 473.
Conditions of policy, arbitration. 9 C. C. A. 628.
Authority of insurance agent. 13 C. C. A. 292.
Waiver of prepayment of insurance premiums. 13 C. C. A. 292.
Suicide as a defense to a life policy. 16 C. C. A. 623.
Credit insurance. 19 C. C. A. 271.
Guaranty insurance. 19 C. C. A. 271.
Fidelity insurance. 19 C. C. A. 273.
Title insurance. 19 C. C. A. 278.

INTENT.
As an element in offer and acceptance of proposition. 16 C. C. A. 199

INTERSTATE COMMERCE.
Taxation of. 8 C. C. A. 492.

JUDGMENT.
Method of entering judgment in federal court—Following state practice. 5 C. C. A. 594.
Rendition on Sunday. 12 C. C. A. 462.
Finality of judgments for purposes of review. 17 C. C. A. 238.
Conclusiveness as between federal and state courts. 21 C. C. A. 478.

JUDICIAL SALES.
On Sunday. 12 C. C. A. 462.

JURISDICTION.
Of circuit court of appeals. 1 C. C. A. 6.
Of supreme court. 1 C. C. A. 9, 11.
Of federal courts. 1 C. C. A. 513.

JURISDICTION—Cont'd.
Of federal courts in equity. 1 C. C. A. 514; 5 C. C. A. 594; 11 C. C. A. 308; 13 C. C. A. 165; 18 C. C. A. 86.
Of federal courts in probate matters. 1 C. C. A. 514.
Of federal courts over corporations. 6 C. C. A. 174.
Of Indian courts. 11 C. C. A. 468.
As affected by possession of the subject-matter. 15 C. C. A. 6.
Of United States circuit courts. 16 C. C. A. 507; 19 C. C. A. 75.
In admiralty as to matters of contract. 18 C. C. A. 347.
In admiralty to enforce liens created by state laws. 21 C. C. A. 21.
Conflict between federal and state courts. 22 C. C. A. 356.
Of federal courts in foreclosure. 24 C. C. A. 523.

JURY.
Right to trial by jury in federal court. 5 C. C. A. 594.

LACHES.
As a defense in suits for infringement of patents, copyrights, and trademarks. 22 C. C. A. 211.

LIMITATION OF ACTIONS.
On insurance policies. 2 C. C. A. 473.

LOTTERY.
What constitutes. 12 C. C. A. 346.

MANDAMUS.
In aid of appeals. 10 C. C. A. 450.

MARINE INSURANCE.
Perils of the sea. 19 C. C. A. 465.
General average. 20 C. C. A. 357.

MARITIME LIENS.
For supplies and services. 15 C. C. A. 679.
Waiver and extinguishment. 17 C. C. A. 102.
Created by state laws. 21 C. C. A. 21.

MASTER AND SERVANT.
Who are fellow servants. 8 C. C. A. 668; 9 C. C. A. 596.
Liabilities of carriers for injuries caused by negligence or torts of servants. 10 C. C. A. 466.

MENTAL SUFFERING.
As an element of damages. 11 C. C. A. 556; 15 C. C. A. 250.

MINES AND MINING.
Right of dower in mines. 3 C. C. A. 316.

MONOPOLIES.
Constitutional restrictions on grant. 14 C. C. A. 6.

MORTGAGES.
Agreement to give a mortgage. 18 C. C. A. 458.
Foreclosure in federal courts. 24 C. C. A. 523.

Digitized by Google

MUNICIPAL CORPORATIONS.
Liability for torts of public officers. 14 C. C. A. 534.

NAMES.
Of parties in deeds and mortgages. 23 C. C. A. 146.

NEGLIGENCE.
Liabilities of carriers for negligence of servants. 10 C. C. A. 466.
Of wife, liability of husband. 12 C. C. A. 196.
Personal liability of directors. 12 C. C. A. 680.
In transmission of telegram. 14 C. C. A. 177.

NEW TRIAL.
When granted in federal courts. 5 C. C. A. 594.

OFFICE AND OFFICER.
Torts of public officers. 14 C. C. A. 534.

PARENT.
Death of child by wrongful act—Damages. 1 C. C. A. 34.

PARTIES.
To actions in federal courts. 5 C. C. A. 594.
Citizenship as affecting the jurisdiction of the federal courts. 10 C. C. A. 254.
Names of, in deeds and mortgages. 23 C. C. A. 146.

PASSENGERS.
Duty of carrier to protect from dangerous fellow passengers. 4 C. C. A. 231.
Right of carrier to restrain or expel disorderly passenger. 4 C. C. A. 231.
Duties and liabilities of sleeping-car companies towards. 10 C. C. A. 335.
Rights against carriers for injuries caused by negligence or torts of servants. 10 C. C. A. 466.

PATENTS FOR INVENTIONS.
Effect of previous adjudication on circuit court of appeals. 3 C. C. A. 565.
Review of interlocutory decree granting or continuing injunction in circuit court of appeals. 3 C. C. A. 572.
Pleading in infringement suits. 19 C. C. A. 595.
To public lands—Cancellation. 22 C. C. A. 38.
Laches as a defense in suits for infringement. 22 C. C. A. 211.

PAYMENT.
Implied obligation to pay for benefits received. 2 C. C. A. 488.

PERILS OF THE SEA.
Damages to ship and cargo by vermin. 18 C. C. A. 231.
Damages to ship and cargo through various causes. 19 C. C. A. 465.

PLEADING.
In common-law actions in federal courts. 5 C. C. A. 594.
Averments of citizenship to show jurisdiction in federal courts. 10 C. C. A. 261.
In patent infringement suits. 19 C. C. A. 595.

PRACTICE.
As regulated by state laws. 1 C. C. A. 515; 5 C. C. A. 594; 9 C. C. A. 548.

PREJUDICE.
As ground for removal of causes. 8 C. C. A. 95.

PROBATE.
Jurisdiction of federal courts. 1 C. C. A. 514.

PUBLIC LANDS.
Liability of purchaser holding equitable title to state taxation. 4 C. C. A. 196.
Not subject to state taxation. 4 C. C. A. 196.
Decisions of land department, their conclusiveness and effect. 22 C. C. A. 38.

PUBLIC POLICY.
As affecting contracts. 9 C. C. A. 666.

RAILROADS.
When land grants taxable. 4 C. C. A. 196.

RECEIVERS.
Citizenship as affecting the jurisdiction of the federal courts. 10 C. C. A. 253.

REMOVAL OF CAUSES.
As restricted by state laws. 1 C. C. A. 515.
For prejudice or local influence. 8 C. C. A. 95.
Construction of statute. 18 C. C. A. 86.

REVIEW, BILL OF.
Necessity of leave to file after decisions on appeal. 4 C. C. A. 72.

SEPARABLE CONTROVERSIES.
As ground for removal of cause. 18 C. C. A. 86.

SHAREHOLDERS.
In national banks. 15 C. C. A. 130.

SHIPPING.
Implied warranty of seaworthiness. 15 C. C. A. 388.
Damages to ships and cargoes by vermin. 18 C. C. A. 231.
Loss by perils of the sea. 19 C. C. A. 465.
Demurrage. 21 C. C. A. 337.

SLEEPING-CAR COMPANIES.
Their duties and liabilities towards their passengers. 10 C. C. A. 335.

STATE COURTS.
Proceedings enjoined by federal courts. 16 C. C. A. 90.

Digitized by Google

STATE COURTS—Cont'd.
Conclusiveness of judgments between federal and state courts. 21 C. C. A. 478.
Conflict of jurisdiction with federal courts. 22 C. C. A. 356.

STATES.
Federal jurisdiction in suit against state. 13 C. C. A. 165.
Estoppel against. 16 C. C. A. 353.

STATUTES.
Construction of statutes. 11 C. C. A. 71.

STOCKHOLDERS.
Liability to creditors of corporation. 23 C. C. A. 315.

SUICIDE.
As a defense to a suit for life insurance. 16 C. C. A. 623.

SUNDAY.
As dies non juridicus. 12 C. C. A. 462.

SUPPLEMENTARY PROCEEDINGS.
Following state practice. 5 C. C. A. 594.

SUPREME COURT.
Certiorari to circuit court of appeals. 1 C. C. A. 5.
Jurisdiction. 1 C. C. A. 9, 11.

TARIFF LAWS.
Interpretation of commercial and trade terms. 18 C. C. A. 545.

TAXATION.
Lands of the United States not subject to state taxation. 4 C. C. A. 196.
Of equitable title to public lands. 4 C. C. A. 196.
Of railroad land grants. 4 C. C. A. 196.
Due process of law. 8 C. C. A. 398.
Notice of equalization. 8 C. C. A. 400.
Forfeiture for nonpayment. 8 C. C. A. 401.
Regulation of commerce. 8 C. C. A. 492.
Limitations of taxing power from mutual independence of federal and state governments. 23 C. C. A. 515.
Of foreign corporations. 24 C. C. A. 13.
Tax deed as color of title. 24 C. C. A. 402.

TELEGRAPH COMPANIES.
Delay in transmission of message. 14 C. C. A. 177.
Measure of damages in actions against. 15 C. C. A. 235.

TITLE INSURANCE. 19 C. C. A. 278.

TORTS.
Liabilities of carriers for negligence and torts of servants. 10 C. C. A. 466.
Of wife, liability of husband. 12 C. C. A. 196.
Of public officers. 14 C. C. A. 534.
As affecting demurrage. 21 C. C. A. 345.

TRADE-MARKS AND TRADE-NAMES.
Contracts relating to use. 14 C. C. A. 104.
Assignment of right to use a person's name. 17 C. C. A. 579.
Right to use one's own name. 17 C. C. A. 579.
Use of corporate and firm names. 17 C. C. A. 579.
Use of geographical names. 17 C. C. A. 657.
Unfair competition. 20 C. C. A. 165.
Laches as a defense in suits for infringement. 22 C. C. A. 211.

TRIAL.
Instructing jury and receiving verdict on Sunday. 12 C. C. A. 462.

TRUSTEES.
Citizenship as affecting the jurisdiction of the federal courts. 10 C. C. A. 252.

TRUSTS.
Assets of corporation when trust fund for creditors. 23 C. C. A. 315.

UNITED STATES.
Estoppel against. 16 C. C. A. 353.
Assignment of claims and government contracts. 22 C. C. A. 650.

WAIVER.
Of prepayment of insurance premiums. 13 C. C. A. 292.
Of maritime liens. 17 C. C. A. 102.

WAREHOUSEMEN.
Liability of carriers. 20 C. C. A. 529.

WIFE.
Death of husband by wrongful act—Damages. 1 C. C. A. 33.

WITNESS.
Competency in federal courts—Following state practice. 5 C. C. A. 594; 21 C. C. A. 278.
Method of summoning. 5 C. C. A. 594.
Comments of counsel in argument on failure to produce. 13 C. C. A. 589.

WRITS.
Form and service of process. 5 C. C. A. 594.
Issue and service on Sunday. 12 C. C. A. 462.

See End of Index for Tables of C. C. A. Cases in other Reports.

Digitized by Google

CASES

ARGUED AND DETERMINED

IN THE

UNITED STATES CIRCUIT COURTS OF APPEALS.

(78 Fed. 103.)

UNITED STATES v. FERGUSON.

(Circuit Court of Appeals, Second Circuit. January 13, 1897.)

1. MONEY WRONGFULLY RETAINED BY FEDERAL OFFICER — CLAIM AGAINST UNITED STATES—STATUTE.
   Money taken from one arrested for larceny from a post office was retained by the inspector under the erroneous supposition that it was the money stolen. *Held*, that an order by the prisoner to the inspector to pay it to a third person was not an assignment of a claim against the United States, within Rev. St. § 3477, requiring such assignments to be made in the presence of witnesses, and after the allowance of the claim.
2. SAME—RIGHT OF ACTION—ASSIGNMENT OF.
   A written order to an officer to pay to a third party money belonging to the drawer, but retained by the officer without authority, is an assignment of the right of action to recover it.
3. REVIEW ON APPEAL—FINDINGS OF FACT.
   Findings of fact will not be reviewed where the evidence is not in the record.
4. SAME—ASSIGNMENTS OF ERROR—SUFFICIENCY.
   General assignments that the court erred in rendering judgment against the defendant, and in not rendering judgment in his favor, cannot be considered.

In Error to the District Court of the United States for the Northern District of New York.

Action by Frank C. Ferguson against the United States. Judgment for plaintiff (64 Fed. 88), and defendant appeals.

Wm. A. Poucher, U. S. Atty.

Ford & Ferguson, for defendant in error.

Before WALLACE, LACOMBE, and SHIPMAN, Circuit Judges.

WALLACE, Circuit Judge. The plaintiff in error was the defendant in the court below, and seeks to review a judgment for the plaintiff in a suit brought pursuant to the provisions of the act of congress of March 3, 1887, entitled, "An act to provide for the bringing of suits against the government of the United States." Conformably with section 7 of the act, the court below made and filed

Digitized by Google

a written opinion setting forth the specific findings of fact and the conclusions of law involved in the case. There is no bill of exceptions, and none of the evidence or rulings of the court upon the trial are before us. The assignments of error are eight in number.

The suit was brought to recover a small sum of money ($50.60) in the possession of the government, which had been received by the postmaster general of the United States from a post-office inspector. It appears from the findings of fact that the post-office inspector received the money, and afterwards forwarded it to the postmaster general, under the following circumstances: One Atwood had burglariously entered a post office and stolen postage stamps of the value of $320.61, and money to the amount of $50.60, belonging to the government. He was arrested the next day, and postage stamps of the value of $127.30, and $113.96 in money, were found upon his person. The stamps and money were turned over by the arresting officers to the post-office inspector in charge of the case. The inspector, apparently assuming that the money found upon Atwood's person was, to the extent of $50.60, the stolen money, kept that amount in his possession pending the trial of Atwood. In fact, it was not the stolen money, or the proceeds of the stolen postage stamps. The plaintiff, a lawyer, was retained by Atwood to defend him upon the trial, and Atwood gave him a written order, directed to the inspector, for the payment of the $50.60 in the hands of the inspector. The plaintiff presented this order to the inspector, but the latter refused to pay over the money. Thereafter Atwood was convicted of the burglary, and the inspector transmitted the money to the postmaster general. As a conclusion of law, the court found that the plaintiff was entitled to judgment for the sum of $50.60, and interest thereon from the time of the demand and refusal.

The first and second assignments of error allege that the court erred in not finding that there was no legal and valid assignment of the money from Atwood to the plaintiff. It is argued in support of these assignments of error that the order given by Atwood to the plaintiff was an assignment of a claim against the United States, and void by force of section 3477 of the Revised Statutes, which enacts that "all transfers and assignments made of any claim upon the United States * * * shall be absolutely null and void unless they are freely made and executed in the presence of at least two attesting witnesses, after the allowance of such a claim, the ascertainment of the amount due and the issuing of a warrant for the payment thereof." The obvious answer to this contention is that, when the money in the hands of the inspector was transferred by Atwood to the plaintiff, there was no claim against the United States. As was said in Hobbs v. McLean, 117 U. S. 567, 6 Sup. Ct. 870, the section "only refers to claims against the United States which can be presented by the claimant to some department or officer of the United States for payment, or may be prosecuted in the court of claims. The section simply forbids the assignment of such claims before their allowance." At the time when the order was given the inspector had no authority, under the laws of the United States, or no color of authority, to take into his possession

Digitized by Google

and assume to retain money belonging to Atwood, even though Atwood had stolen an equivalent sum of government moneys from a post office. It is not pretended that any statute, or any regulation of the postmaster general made pursuant to a statute, could sanction a transaction of that kind. So long as the money was in the hands of the inspector, or of his superior officer, the postmaster general, there was no claim against the United States, and only one against the officers of the government, who had transcended their authority, and made themselves individually liable for the consequences. No claim accrued against the government until it ratified the acts of these officers by receiving and retaining the money which had been taken from Atwood. Until then, the government could have repudiated their acts, and there would not have been the slightest foundation for an action against it. The order given by Atwood to the plaintiff, being for money then in the adverse possession of another, was but a transfer of a chose in action. It, however, operated as an assignment of his cause of action for the recovery of the money. Hall v. Robinson, 2 N. Y. 293; Waldron v. Willard, 17 N. Y. 467; Sherman v. Elder, 24 N. Y. 381. It is now generally the doctrine in this country that a cause of action for a conversion is assignable. See 2 Am. & Eng. Enc. Law (2d Ed.) p. 1021.

The third, fourth, fifth, and sixth assignments of error impugn some of the findings of fact made by the court. There being no bill of exceptions, we can only review errors apparent upon the record. As the evidence upon the trial is not before us, these findings cannot be reviewed.

The seventh assignment alleges as error that the court erred in rendering a judgment against the defendant; and the eighth, that the court erred in not rendering a judgment in favor of the defendant. These assignments do not comply with the rules, as they fail to point out any particular error asserted and intended to be urged. Whether they mean that a wrong result was reached because the facts were erroneously decided, or because the court erred in applying the law to the facts, can only be conjectured. Grape Creek Coal Co. v. Farmers' Loan & Trust Co., 12 C. C. A. 350, 63 Fed. 891; Oswego Tp. v. Travelers' Ins. Co., 17 C. C. A. 77, 70 Fed. 225; Doe v. Mining Co., 17 C. C. A. 190, 70 Fed. 455. As was said by the circuit court of appeals for the Seventh circuit in the first of these cases, "an assignment of error cannot be good if it is necessary to look beyond its terms to the brief for a specific statement of the question to be presented." The court, at its option, may notice a plain error not assigned. A careful examination of the brief which has been submitted for the plaintiff in error fails to disclose any such error.

The judgment should be affirmed.

Digitized by Google

(78 Fed. 110.)

UNITED STATES v. BUFFALO NATURAL GAS FUEL CO.

(Circuit Court of Appeals, Second Circuit. January 7, 1897.)

1. CUSTOMS DUTIES—CONSTRUCTION OF LAWS—WORDS OF CLASSIFICATION.
   In tariff laws, words of classification are, in general, to be construed either in their common or their commercial meaning, as opposed to their scientific or technical sense.
2. SAME—CLASSIFICATION—NATURAL GAS.
   Natural gas was exempt from duty under paragraph 651 of the act of 1890, as a crude mineral, and was not dutiable under section 4, as a "raw or unmanufactured article not enumerated." 73 Fed. 191, affirmed.

This is an appeal from a decision of the circuit court for the Northern district of New York (73 Fed. 191) affirming a decision of the board of general appraisers which reversed the decision of the collector of the port of New York assessing a rate of duty upon natural gas. The gas, which is obtained by boring into the ground, comes from Shirkstown, in the dominion of Canada, about 12 miles from Buffalo. It is conveyed, through pipes, to and across the Niagara river, and is thus imported into the city of Buffalo, and there used in the same form in which it is taken from the earth. The importation in question was on August 1 and 4 and November 21, 1891.

Edward B. Whitney, Asst. Atty. Gen., and Wm. A. Poucher, for appellant.

Herbert P. Bissell, for appellee.

Before WALLACE, LACOMBE, and SHIPMAN, Circuit Judges.

LACOMBE, Circuit Judge. The tariff act in force at the date of this importation was what is known as the "McKinley Act," and was passed October 1, 1890. Prior to its passage natural gas had been obtained from the earth by boring or drilling in many different localities within the United States, had been bought and sold commercially, and had gone into use extensively; but, up to October 1, 1890, none had ever been imported. It is not mentioned by name in the tariff act, nor is it specifically enumerated therein. The collector assessed it as dutiable at 10 per cent., under section 4 of the act, as a "raw or unmanufactured article not enumerated or provided for." The importers protested, insisting that it was enumerated in one or other of the two following paragraphs of the free list:

"496. Asphaltum and bitumen, crude."

"651. Minerals, crude, or not advanced in value or condition by refining or grinding, or by other processes of manufacture, not specially provided for in this act."

The board of general appraisers found that natural gas was a crude mineral, and exempt from duty under paragraph 651; and the circuit court has sustained that decision.

Much testimony from scientific men, geologists, mineralogists, and chemists was introduced upon the hearing before the board. It

Digitized by Google

is interesting, but not especially helpful to a determination of the question presented here. In the "interpretation of the revenue laws, words are to be taken in their commonly received and popular sense, or according to their commercial designation if that differs from the ordinary understanding of the word." Lutz v. Magone, 153 U. S. 105, 14 Sup. Ct. 777.

In U. S. v. Breed, 1 Sumn. 159, Fed. Cas. No. 14,638, Mr. Justice Story, referring to Two Hundred Chests of Tea, 9 Wheat. 430, says:

"It was there held that, in construing revenue laws, we were to consider the words, not as used in the scientific or technical sense, where things are classified according to their scientific characters and properties;" and "laws of this sort taxed things by their common and usual denominations among the people, and not according to their denominations among naturalists or botanists or men of science."

Reference may also be had to Robertson v. Salomon, 130 U. S. 412, 9 Sup. Ct. 559; Nix v. Hedden, 149 U. S. 304, 13 Sup. Ct. 881; and Lutz v. Magone, 153 U. S. 105, 14 Sup. Ct. 777. In two of these cases shelled beans, although shown to be "seeds" in the language of botany, and tomatoes, although botanically they were "fruit," were both held to be "vegetables," within the meaning of that word in the tariff act. In the third case it was held that saccharine, a substance 300 times as sweet as sugar, although scientifically an "acid," was not an acid for revenue purposes.

There is no evidence in the record of any special trade meaning of the words "crude minerals." We are left, then, to determine the meaning of these words from judicial knowledge of the ordinary meanings of words of common speech, unless there is sufficient in the record to show that some modification of their ordinary signification was in the mind of congress when it passed the act. If the question whether the word "minerals," in ordinary speech, would include such an article as natural gas, were to be settled solely from reference to the dictionaries, its solution might not be easy. In view, however, of the various official publications by the federal government set forth in the record, and which are not intended for scholars or scientific men, but to give to congress and to the people the best knowledge the compilers can, there can be little doubt as to what congress understood to be the scope and meaning of the words,—a scope and meaning which is within some, at least, of the definitions of the lexicographers.

For several years prior to the passage of the tariff act of 1890 there has been prepared each year, by the bureau of statistics in the treasury department, a so-called "Statistical Abstract of the United States." It is prepared under the direction of the secretary of the treasury, and contains statistics of finance, coinage, commerce, etc. It is printed each year at the government printing office, and transmitted by the secretary of the treasury to the house of representatives. These abstracts each contain tables giving the "qualities and values of minerals produced in the United States" during the five or six years immediately preceding the year of publication. In the table contained in the Statistical Abstract of 1888, minerals are divided into metallic and nonmetallic. Of the latter class 35 species are enumerated, and the sixth on the list is "natural gas,"

Digitized by Google

appearing between petroleum and cement. The same is true of the Statistical Abstracts of 1889 and 1890. It thus appears that the reports, to which it is to be supposed that congress refers for enlightenment as to the statistics of the products of this country, used the word "minerals" in a sense broad enough to include natural gas; and, if there be any doubt as to the ordinary meaning of that word, it is to be presumed that congress, when legislating as to the rates of duty to be laid upon the products of other countries, used such word with a meaning equally comprehensive.

We do not undertake in this case to decide whether or not natural gas is a "crude bitumen." If it be such, the provisions of paragraph 496 would control its classification, being more specific than those of paragraph 651. Both paragraphs are in the free list, and, since natural gas comes fairly within the general provision for crude minerals, and is therefore free, it is unnecessary now to inquire whether it is also within the more specific description "crude bitumen," which is also free.

The board of general appraisers properly reversed the collector's assessment of the article for duty. It is not a "raw or unmanufactured article not enumerated." The decision of the circuit court is affirmed.

WALLACE, Circuit Judge. I concur in an affirmance in this case, but not for the reasons given in the prevailing opinion. In scientific classification natural gas may be considered a mineral, but in the tariff act the term "minerals" is to be read in its common acceptation, in the absence of a different commercial signification, and does not, I think, include a gas, but means something which, in ordinary parlance, is mined. I think the importation in controversy should be classified under the provision of the free list which exempts from duty "asphaltum and bitumen, crude." If it belongs there, as this is the more specific term of description, it is excluded from the category of "minerals, crude." According to the testimony in the record, "bitumen" is a generic term, applied to a large number of natural substances which consist largely or chiefly of hydrocarbons. This substance may be gaseous, as natural gas or marsh gas; fluid, as petroleum or naphtha; viscous, as the semi-fluid asphaltum; or solid, as some forms of asphaltum. According to McCulloch's Commercial Dictionary, bitumen includes a considerable range of inflammable mineral substances, burning with the flames in the open air, which differ in consistency from a thin fluid to a solid. He says:

"Near the village of Amiano, in the state of Parma, there exists a spring which yields this substance in a sufficient quantity to illuminate the city of Genoa, for which purpose it is employed."

Digitized by Google

(78 Fed. 113.)

ROUSSEAU v. PECK et al.

(Circuit Court of Appeals, Second Circuit. January 7, 1897.)

PATENTS—ANTICIPATION AND INFRINGEMENT—ELECTRIC CIRCUIT BREAKERS.

The Rousseau patent, No. 279,107, for an automatic electric circuit opener or "cut-off," used chiefly in connection with lighting gas jets, *held* to be for an improvement of a secondary character; and the first claim thereof construed, and *held* that the form of the complainant's apparatus which was alleged to have been infringed, had been anticipated. 66 Fed. 759, affirmed.

Appeal from the Circuit Court of the United States for the Eastern District of New York.

This was a suit in equity by David Rousseau against John B. Peck and Sarah E. Ostrander for alleged infringement of an automatic electric circuit opener. The circuit court dismissed the bill, holding that the claims of the patent were not infringed, and were apparently invalid. 66 Fed. 759. The complainant has appealed.

Richard N. Dyer, for appellant.

Edward P. Payson and Edwin H. Brown, for appellees.

Before LACOMBE and SHIPMAN, Circuit Judges.

SHIPMAN, Circuit Judge. This appeal is from a decree of the circuit court for the Eastern district of New York, which dismissed a bill in equity founded upon the alleged infringement by the defendants of claims 1 and 2 of letters patent No. 279,107, dated June 5, 1883, and issued to David Rousseau, for an automatic circuit opener or "cut-off." At the hearing before this court upon the appeal, the appellant withdrew from consideration the questions relative to claim 2.

The improvement which is shown in the patent was intended to be chiefly used in connection with systems for lighting gas by electricity. In these systems the circuit is ordinarily open until it is closed to perform each operation, but sometimes it becomes permanently closed, when the battery loses its power, is exhausted, and the apparatus is inoperative. The invention was intended to be an improvement upon the kind of circuit breaker shown in the device, known in the record and in the art of circuit breaking as the "Gibson Cut-Off," which is used by the Holmes Burglar-Alarm Company, and in which, if an abnormal closure of the circuit occurs, it remains closed until the clockwork which operates the circuit breaker has run down. The specification says that the improvement was for the purpose of preventing the result which follows from too long a closure, and of "automatically breaking the circuit whenever it becomes closed longer than is necessary to operate any of the usual devices in circuit." The improvement is described in the last clause of claim 1, which is as follows:

"The combination, with an electric generator and an electric circuit emanating therefrom, of an electro-motive device which is vitalized by the closing of said circuit, automatic time mechanism which is started into operation by said electro-motive device when so vitalized, and an automatic circuit breaker which is op-

Digitized by Google

erated by said time mechanism to permanently break said circuit at the expiration of a predetermined time after the closing of the same, substantially as set forth."

It will be perceived that the first four elements of the claim are of a well-known character, and that the fifth element is the one of novelty. The meaning of this clause of the claim is that the time mechanism is to cause the circuit breaker to break the abnormally closed circuit when the motor has run, and not until it has run, a time after the closing of the circuit, which time was established or arranged beforehand. The distinctive character of the Rousseau machine which differentiates it from the Gibson cut-off is that, "after the normal closing of the circuit in lighting the gas, the parts which tend towards the permanent opening of the circuit return to their original position." In other words, "if the time mechanism does not run for the predetermined period, the circuit breaker will be restored to the starting point." The claim does not, in terms, describe this operation. It says that the time after the closure of the circuit is predetermined, and the uniformity and equality of the predetermined periods are found in the claim, if at all, because the description of the mechanism shows that in fact the intervals of time become uniform and equal.

The defenses against the validity of the claim are many, and of a serious character. Judge Wheeler was of opinion that the claim was faulty because it did not include or describe this distinctive improvement, viz.: "The restoration or readjustment of the circuit-breaking mechanism after each normal closure of the circuit, and before the time mechanism had run the predetermined period"; secondly, because it was functional; and, thirdly, that, if the claim was for the mechanism of the specification, it had not been infringed. The defendants also insisted that the mechanism of the claim had been anticipated by devices alleged to have been pre-existing. A discussion of all the questions in the case would require an expenditure of a good deal of time upon a claim which is, at the best, of very little value. We shall therefore advert to one clearly-sustained defense, which is that the form of the complainant's circuit-breaking apparatus which was alleged to have been infringed had been anticipated.

It is to be premised that the patented improvement was of a secondary character; that there are different combinations of bars and springs, and other co-operating parts, which can be operated by clockwork so as to permanently break the circuit; that claim 1 is dangerously near being a claim for a mode of operation, and, if saved, it is saved by the words "substantially as set forth," which serve to limit the claim to the described mechanism (Seymour v. Osborne, 11 Wall. 516; Curt. Pat. [4th Ed.] 281); and that when construed by reference to the Sawyer patent, which will be hereafter mentioned, it is a secondary improvement of a narrow character. The bill in equity in this case was originally founded upon the alleged infringement of the Rousseau patent, and letters patent to William H. Sawyer, No. 279,023, dated June 5, 1883, and letters patent to Jacob P. Tirrell, No. 283,303, dated August 14, 1883. The complainant's

Digitized by Google

expert, upon his prima facie case, testified that each of these patents claimed broadly an automatic circuit-opening device adapted to permanently break an electrical circuit only after the circuit had been closed a predetermined length of time, and, furthermore, testified, without objection, that the application for the Sawyer patent was filed before the application for the other patents, as appeared from the dates upon them, and that, therefore, the Sawyer patent was entitled to the broadest claim. Cross-examination of the witness showed that the claims of the Sawyer patent required that an element of the combination should have a characteristic which did not exist in the defendants' machine, and, furthermore, that the mechanism of Fig. 4 of the drawings of the Sawyer patent, which was described in the specification, but was not included in the claims, anticipated the form of the mechanism described in the Rousseau patent, which was alleged to have been infringed by the defendants. It was therefore necessary for the complainant not only to abandon the Sawyer patent as a patent which had been infringed, but to show that the Rousseau patent was its senior, and therefore had not been anticipated. When the complainant began his testimony in rebuttal, his counsel gave notice that, for the purposes of the suit, he abandoned the Sawyer and the Tirrell patents, and would rest his case upon the Rousseau patent, and thereupon introduced the testimony of Rousseau and Huck, one of his workmen, to show that he invented the mechanism in April or May, 1879. His application was filed April 29, 1881, and Sawyer's application was filed September 28, 1880. The testimony of Rousseau and Huck does not show, with strength, the creation of the Rousseau structure, as a completed thing for use, in 1879; but its strength, whatever it would have been, was destroyed by Rousseau's sworn preliminary statements to the commissioner of patents in the matter of the interference between his and Sawyer's applications. Mr. Brevoort testified for the complainant that the Rousseau cut-off of 1879 contained the inventions as patented in the first and second claims of the patent in suit; but Rousseau, when he made his statements, dated November 4 and November 16, 1881, in regard to the date of the invention, omitted all mention of his machine of 1879, and said that in August or September, 1878, he made drawings of a device in connection with electric gas-lighting circuits, on the principle shown in his application, and that in March, 1880, he made a working drawing and a working instrument embodying the invention in question. If he had made a working instrument in the spring of 1879, he must have recollected, and it would seem that he would have stated, a fact which had so important a bearing upon the date of his invention. The attempt to answer this inconsistency by saying that the machine of 1879 did not contain a coil for generating a spark for the lighting of gas is without force. He took an assignment of the Sawyer invention for certain states on February 15, 1882, before the patent was issued, and his present title is by virtue of that assignment. Rousseau thus took the burden of proof of showing that his invention anticipated the invention described in Sawyer's patent, which he had put into the case, and which was prima facie an anticipation of his own patent.

Digitized by Google

This burden of proof he has not sustained, and the question of priority remains as it did upon the testimony offered by the complainant's expert.

The Rousseau specification shows three forms of apparatus, which are described in general, but apparently correct, terms, as follows, in the defendants' brief:

"The principal form of the specification is composed of the magnet, B, which releases a detent, l, allowing a clock motor to work, which starts a second clockwork motor, which turns an eccentric, thereby elevating a shaft so as to change the circuit and shift the current into a second magnet, o, out of action, until the circuit is thus changed, which, on being energized, attracts its armature, thereby releasing an annunciator drop, which, in falling, ruptures the circuit.

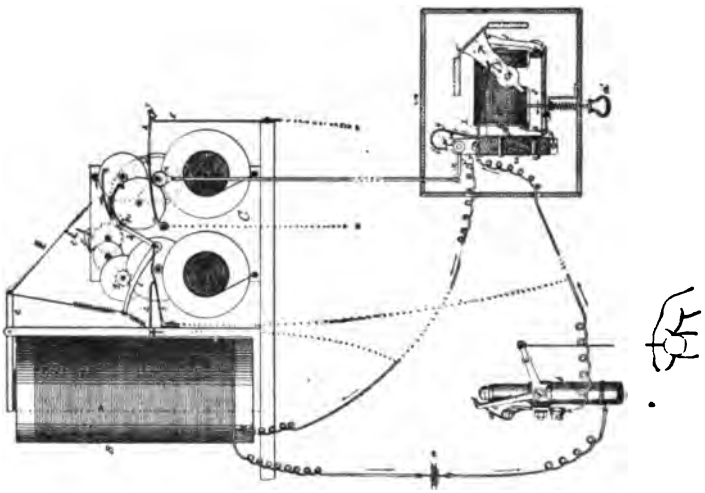

"The patent, in a few lines (12-23, p. 3), suggests magnet, B, with one clockwork motor, and the tongues, 2, 3, instead of the entire apparatus, the clock then operating to remove the support of one tongue until it can drop away from the other. It also briefly suggests, as a third form, the magnet, B, and the two clockworks, with the tongues, 4, 5, the second clockwork lifting one tongue away from the other."

The second form, with one clockwork motor, and the tongues, 2 and 3, is the one which the defendants are said to use. The complainant's expert, upon being asked to point out wherein the combination of Fig. 4 of the Sawyer patent differed from the combination disclosed in claim 1 of the Rousseau patent, replied that he found that the elements were the same, but that there was a specific difference in the automatic circuit breakers, in that "the automatic circuit breaker in the Rousseau patent is brought into operation upon energizing the magnet, o, while that in Fig. 4 of the Sawyer apparatus is brought into operation by clock mechanism." Magnet, o, is not used in the second form of the Rousseau invention, and its circuit breaker is brought into operation by clockwork. A similar identity between Fig. 4 and claim 1 was subsequently stated by the same witness. The decree of the circuit court is affirmed, with costs.

Digitized by Google

(76 Fed. 420.)

McCANNA & FRASER CO. v. CITIZENS' TRUST & SURETY CO. OF PHILADELPHIA.

(Circuit Court of Appeals, Third Circuit. October 23, 1896.)

No. 33.

FOREIGN CORPORATIONS—COMPLIANCE WITH LOCAL LAWS—SURETY BONDS.

A surety bond taken as security for the conduct of an agent of a foreign corporation which undertakes to do business in Pennsylvania without complying with the requirement of the second section of Act April 22, 1874, that a statement showing the title and object of the corporation, the location of its officers, and names of its agents, etc., shall be filed in the office of the secretary of the commonwealth, is invalid. 74 Fed. 597, affirmed. Thorne v. Insurance Co., 80 Pa. St. 15, and Johnson v. Hulings, 103 Pa. St. 498, followed.[1]

In Error to the Circuit Court of the United States for the Eastern District of Pennsylvania.

This was an action by the McCanna & Fraser Company against the Citizens' Trust & Surety Company of Philadelphia to recover upon a surety bond.

John W. Shortledge, for plaintiff in error.

David J. Myers, Jr., for defendant in error.

Before DALLAS, Circuit Judge, and BUTLER and WALES, District Judges.

BUTLER, District Judge. The suit is on a surety bond given by the defendant to the plaintiff—the latter being a corporation of Wisconsin. The bond recites that the plaintiff has appointed S. Ridgway Kennedy its manager, and that he is to enter into its service accordingly in Philadelphia, and then stipulates that the defendant will reimburse the plaintiff to the extent of $7,000 for such pecuniary loss, if any, as may be sustained by said employer by reason of the dishonesty of the employé, amounting to embezzlement or larceny, in connection with his duty as manager of the plaintiff's business.

An act of assembly of the commonwealth of Pennsylvania, approved April 22, 1874, requires every foreign corporation undertaking to do business in the state of Pennsylvania to establish an office here, and to appoint an agent for the transaction of business; and the second section declares that it shall not be lawful for any such corporation to do any business in this commonwealth until it shall have filed in the office of the secretary of this commonwealth a statement under the seal of the corporation and signed by the president and secretary thereof showing the title and object of the corporation, the location of its office or offices, and the name or names of its agent or agents, etc.

The third section declares that any person or persons, agent or agents, officer or employé of such foreign corporation who shall transact any business in this commonwealth without compliance

[1] See note at end of case.

Digitized by Google

with the provisions of the act shall be guilty of a misdemeanor, and on conviction thereof shall be punished by imprisonment, etc.

The plaintiff did not comply with the second section, and consequently its business transacted here was unlawful. The construction and effect of the statute have several times been considered by the supreme court of the state (whose decisions in this regard are binding on us) and that court has held that the transaction of business in Pennsylvania by a foreign corporation, under such circumstances, and all contracts pertaining to it, are unlawful. In Lasher v. Stimson, 145 Pa. St. 30 [23 Atl. 552], it is said:

"These terms are not onerous, or in conflict with any constitutional provision or rule of public policy. But they are clearly prohibitory, and they indelibly stamp as unlawful any business transaction within the state, by a foreign corporation which has not complied with them. It is only by its observance of them that it can have a legal existence for business purposes within this jurisdiction, or acquire contractual rights which our courts will recognize. Thorne v. Insurance Co., 80 Pa. St. 15."

It will be observed that the court in its construction adopts the principles of the case of Thorne v. Insurance Co., in which it was held that, when a foreign insurance company has not complied with the act under which alone it is authorized to transact business in Pennsylvania, there can be no recovery by the company upon a bond given by its agent, with sureties, conditioned for paying over moneys of the company received by him. Johnson v. Hulings, 103 Pa. St. 498, is to the same effect. Thus it results that the bond in suit must be regarded as taken to protect the plaintiff while engaged in prosecuting its business in violation of law. It is substantially a contract to protect the plaintiff against loss while engaged in violating the law. It requires no argument to demonstrate that such a contract is invalid. The point made by the plaintiff's counsel, that inasmuch as the appointment of the agent was lawful the bond taken as security for his conduct is not liable to the objection urged, is ingenious, but is not sound. The conduct contemplated relates to his prosecution of the unlawful business stated. It is true that the defendant may not have known or supposed that the business would be undertaken without compliance with the statute. It is immaterial, however, what the defendant's understanding was in this respect. It must be inferred that the plaintiff contemplated a disregard of the law from the beginning; inasmuch as he subsequently violated it. In any view that can be taken of the subject the fact remains that the plaintiff is seeking to enforce a contract entered into for the purpose of securing it in conducting a business forbidden by law; and such a contract is necessarily void.

The judgment is affirmed with costs.

Digitized by Google

NOTE.

Exclusion, Regulation, and Taxation of Foreign Corporations.

1. In General.
2. The Right to Exclude Foreign Corporations and to Impose Conditions.
3–4. Same—Const. U. S. Art. 4, § 2; and Amend. 14, § 1.
5. Imposition of Taxes and License Fees.
6. Prohibition of the Exercise of Greater Rights than are Given Domestic Corporations.
7. Designation of Place of Business and Appointment of Agent.
8. Miscellaneous Requirements.
9–12. Retaliatory Statutes.
13. Restrictions of the Federal Constitution.
14. Prohibiting Removal of Cause to the Federal Courts.
15. Corporations Employed in the Business of the Federal Government or Acting under Act of Congress.
16. Obligation of Contracts.
17. Deprivation of Property without Due Process of Law.
18. Interference with Interstate or Foreign Commerce—Const. U. S. Art. 1, § 8.
19–24. Same—Railroad, Steamship, and Express Companies.
25. Same—Telegraph and Telephone Companies.
26. Same—Insurance.
27. Same—Mercantile Agencies.
28. Same—Ferry Corporations.
29–30. Same—Manufacturing and Trading Corporations.
31–35. What Constitutes "Doing Business" in the State.
36–41. Same—Place of Contract or Transaction.
42. Effect of Failure to Comply with Conditions.
43–45. Same—Where a Penalty is Imposed.
46. Same—Penalty Imposed for Revenue Purposes Only.
47. Same—Where no Penalty is Imposed.
48. Same—Where Statute Declares that Contracts shall be Valid.
49. Same—Where Business is not Prohibited.
50–51. Same—Right of Corporation to Set up Noncompliance with the Law.
52. Same—Estoppel of Other Party to Contract.
53. Same—Contracts and Transactions not Connected with Illegal Business.
54. Same—Negotiable Instruments.
55. Same—Compliance with Statutes after Making of Contract or Bringing Suit.
56. Same—Executed Contracts.
57. Same—Contracts with Others than Citizens.
58. Same—Crimes against Noncomplying Corporations.
59–60. Prohibition against Acquiring and Holding Land.
61. Mandamus to Compel Issuance of a License.
62. Ouster in Quo Warranto Proceedings.

IN GENERAL.

1. It is well settled that the charter of a corporation can have no effect, ex proprio vigore, beyond the limits of the sovereignty by which it was granted, for the grant of a charter is a law, and the laws of a state can have no extraterritorial operation. "A corporation can have no legal existence out of the boundaries of the sovereignty by which it is created. It exists only in contemplation of law, and by force of the law; and where that law ceases to operate, and is no longer obligatory, the corporation can have no existence. It must dwell in the place of its creation, and cannot migrate to another sovereignty." Bank v. Earle, 13 Pet. 519, 585. It is possible, however, for a corporation to act beyond the limits of the state by which it was created by its agents, if the state in which it undertakes thus to act chooses to permit it to do so; and by rules of comity foreign corporations are generally recognized, and allowed to do business subject to such restrictions as the foreign state may see fit to impose. The purpose of this note is to show what restrictions may be imposed upon foreign corporations, and the effect of failure to comply with the law.

Digitized by Google

THE RIGHT TO EXCLUDE FOREIGN CORPORATIONS AND TO IMPOSE CONDITIONS.

2. No principle of law is better settled than that a corporation created by or under the laws of one state or country can exercise none of the functions or privileges conferred upon it by its charter in any other state or country, except by the comity or consent of the latter. Any other state or country has a perfect right, subject to constitutional limitations, to exclude it altogether, or to impose such terms as it chooses as a condition of allowing it to do business. The leading case holding this doctrine is Paul v. Virginia, 8 Wall. 168. In this case a Virginia statute requiring foreign insurance companies, before issuing policies in the state, to deposit security and obtain a license, was upheld as clearly within the power of the state. In delivering the opinion of the court, Mr. Justice Field said: "The corporation, being the mere creation of local law, can have no legal existence beyond the limits of the sovereignty where created. As said by this court in Bank v. Earle: 'It must dwell in the place of its creation, and cannot migrate to another sovereignty.' The recognition of its existence even by other states, and the enforcement of its contracts made therein, depend purely upon the comity of those states, —a comity which is never extended where the existence of the corporation or the exercise of its powers is prejudicial to their interests or repugnant to their policy. Having no absolute right of recognition in other states, but depending for such recognition and the enforcement of its contracts upon their assent, it follows, as a matter of course, that such assent may be granted upon such terms and conditions as those states may think proper to impose. They may exclude the foreign corporation entirely, they may restrict its business to particular localities, or they may exact such security for the performance of its contracts with their citizens as in their judgment will best promote the public interest. The whole matter rests in their discretion."

The fact that a state, in imposing conditions and burdens upon foreign corporations, discriminates between such corporations and like corporations formed under its own laws, can give the former no ground of complaint. As to the nature and extent of such discrimination, it belongs to the state to determine, subject only to such limitations on her sovereignty as may be found in the constitution of the United States. Ducat v. Chicago, 10 Wall. 410. The decisions of the state courts are to the same effect. People v. Fire Ass'n of Philadelphia, 92 N. Y. 311; People v. Wemple, 131 N. Y. 64, 29 N. E. 1002; Com. v. New York, L. E. & W. R. Co., 129 Pa. St. 463, 18 Atl. 412; Com. v. Milton, 12 B. Mon. 212; Slaughter v. Com., 13 Grat. 767; Attorney General v. Bay State Min. Co., 99 Mass. 148; Tatem v. Wright, 23 N. J. Law. 429; Insurance Co. v. Burdett, 112 Ind. 204, 13 N. E. 705; Central Railroad & Banking Co. v. Georgia Construction & Investment Co. (Ga.) 11 S. E. 192; Insurance Co. v. Davis, 29 Mich. 238; Hartford Fire Ins. Co. v. Commissioner of Insurance, 70 Mich. 485, 38 N. W. 474; Huffman v. Investment Co. (Tex. Civ. App.) 36 S. W. 306; Goldsmith v. Insurance Co., 62 Ga. 379; Insurance Co. v. Welch, 29 Kan. 672; and cases hereafter cited.

With regard to the expediency or policy of statutes imposing conditions upon foreign corporations, or excluding them, or regulating them, the courts have nothing to do. That is purely a legislative question. The statutes must be upheld unless they are plainly in conflict with some provision of the state or federal constitution, and, if there is doubt as to their constitutionality, the doubt must be resolved in favor of their validity. Insurance Co. v. Burdett, 112 Ind. 204, 13 N. E. 705. "It has been repeatedly held, and there seems to be no conflict of authority, that corporations of one state have no right to exercise their franchises in another state except upon the assent of such other state, and upon such terms as may be imposed by the state where their business is to be done. The conditions imposed may be reasonable or unreasonable; they are absolutely within the discretion of the legislature." Hartford Fire Ins. Co. v. Commissioner of Insurance, 70 Mich. 485, 38 N. W. 474, 482.

SAME—CONST. U. S. ART. 4, § 2; AND AMEND. 14, § 1.

3. The right of a state to exclude foreign corporation, or to impose conditions upon allowing it to do business, is not in any way affected by the provision of the federal constitution (article 4, § 2) that the "citizens" of each state of the Union shall be entitled to all the privileges and immunities of citizens in the several states, for corporations are not "citizens," within the meaning of this provision. As was said in Paul v. Virginia, 8 Wall. 168: "The term

Digitized by Google

'citizens,' as used in this provision, applies only to natural persons, members of the body politic, owing allegiance to the state, not to artificial persons created by the legislature, and possessing only the attributes which the legislature has prescribed. It is true that it has been held that, where contracts or rights of property are to be enforced by or against corporations, the courts of the United States will, for the purpose of maintaining jurisdiction, consider the corporation as representing citizens of the state under the laws of which it is created, and to this extent will treat a corporation as a citizen within the clause of the constitution extending the judicial power of the United States to controversies between citizens of different states. * * * But in no case which has come under our observation, either in the state or federal courts, has a corporation been considered a citizen within the meaning of that provision of the constitution which declares that the citizens of each state shall be entitled to all the privileges and immunities of citizens of the several states. In Bank v. Earle, 13 Pet. 586, the question arose whether a bank, incorporated by the laws of Georgia, with a power, among other things, to purchase bills of exchange, could lawfully exercise that power in the state of Alabama; and it was contended, as in the case at bar, that a corporation, composed of citizens of other states, was entitled to the benefit of that provision, and that the court should look beyond the act of incorporation, and see who were its members, for the purpose of affording them its protection, if found to be citizens of other states, reference being made to an early decision upon the right of corporations to litigate in the federal courts in support of the position. But the court, after expressing approval of the decision referred to (Bank v. Deveaux, 5 Cranch, 61), observed that the decision was confined in express terms to a question of jurisdiction; that the principle had never been carried further, and that it had never been supposed to extend to contracts made by a corporation, especially in another sovereignty from that of its creation; that if the principle were held to embrace contracts, and the members of a corporation were to be regarded as individuals carrying on business in the corporate name, and therefore entitled to the privileges of citizens, they must at the same time take upon themselves the liabilities of citizens, and be bound by their contracts in like manner; that the result would be to make the corporation a mere partnership in business, with the individual liability of each stockholder for all the debts of the corporation; that the clause of the constitution could never have intended to give citizens of each state the privileges of citizens in the several states, and at the same time to exempt them from the liabilities attendant upon the exercise of such privileges in those states; that this would be to give the citizens of other states higher and greater privileges than are enjoyed by citizens of the state itself, and would deprive each state of all control over the extent of corporate franchises proper to be granted therein. 'It is impossible,' continued the court, 'upon any sound principle, to give such a construction to the article in question. Whenever a corporation makes a contract it is the contract of the legal entity, the artificial being created by the charter, and not the contract of the individual members. The only rights it can claim are the rights which are given to it in that character, and not the rights which belong to its members as citizens of a state.' It was undoubtedly the object of the clause in question to place the citizens of each state upon the same footing with citizens of other states, so far as the advantages resulting from citizenship in those states are concerned. It relieves them from the disabilities of alienage in other states; it inhibits discriminating legislation against them by other states; it gives them the right of free ingress into other states, and egress from them; it insures to them in other states the same freedom possessed by the citizens of those states in the acquisition and enjoyment of property and in the pursuit of happiness; and it secures to them in other states the equal protection of their laws. * * * But the privileges and immunities secured to citizens of each state in the several states, by the provision in question, are those privileges and immunities which are common to the citizens in the latter states under their constitution and laws by virtue of their being citizens. Special privileges enjoyed by citizens in their own states are not secured in other states by this provision. It was not intended by the provision to give to the laws of one state any operation in other states. They can have no such operation, except by the permission, express or implied, of those states. The special privileges which they confer must, therefore, be enjoyed at home, unless the assent of other states to their enjoyment therein

Digitized by Google

be given." And see Liverpool Ins. Co. v. Massachusetts, 10 Wall. 566; Pembina Con. Silver Mining & Milling Co. v. Pennsylvania, 125 U. S. 181, 8 Sup. Ct. 737; Norfolk & W. R. Co. v. Pennsylvania, 136 U. S. 114, 10 Sup. Ct. 958.

4. Nor is the right of the state to exclude foreign corporations affected by the constitutional provision (Amend. 14, § 1), that no state shall deny to any person within its jurisdiction the equal protection of the laws. Pembina Con. Silver Mining & Milling Co. v. Pennsylvania, 125 U. S. 181, 8 Sup. Ct. 737; Norfolk & W. R. Co. v. Pennsylvania, 136 U. S. 114, 10 Sup. Ct. 958; Philadelphia Fire Ass'n v. People, 119 U. S. 110, 7 Sup. Ct. 108. Nor is the right of the state in this respect in conflict with the constitutional prohibition against depriving persons of their property without due process of law. Hartford Fire Ins. Co. v. Commissioners of Insurance, 70 Mich. 485, 38 N. W. 474. See post, § 17.

IMPOSITION OF TAXES AND LICENSE FEES.

5. The different states usually impose taxes or license fees, or both, upon foreign corporations, as a condition of allowing them to do business. The power of the state to do so has been questioned, but has uniformly been upheld, so long as the tax does not constitute an interference with interstate or foreign commerce. Ducat v. Chicago, 10 Wall. 410; Id., 48 Ill. 172, 95 Am. Dec. 529; Liverpool Ins. Co. v. Massachusetts, 10 Wall. 566; Blackstone Manuf'g Co. v. Inhabitants of Blackstone, 13 Gray, 488; Attorney General v. Bay State Min. Co., 99 Mass. 148; Slaughter v. Com., 13 Grat. 767; Com. v. Milton, 12 B. Mon. 212; Tatem v. Wright, 23 N. J. Law, 429; People v. Equitable Trust Co., 96 N. Y. 387; People v. Wemple, 131 N. Y. 64, 29 N. E. 1002; Loan Ass'n v. Norman (Ky.) 32 S. W. 952. Compare San Francisco v. Liverpool & L. & G. Ins. Co., 74 Cal. 113, 15 Pac. 380, where a tax upon a foreign corporation already licensed to do business in the state was held invalid, under the provisions of the California constitution relating to the power of taxation.

A state, therefore, may impose upon foreign insurance companies a tax of a certain percentage of all premiums received in the course of their business in the state. Liverpool Ins. Co. v. Massachusetts, 10 Wall. 566; Ducat v. Chicago, Id. 410; Id., 48 Ill. 172, 95 Am. Dec. 529; Philadelphia Fire Ass'n v. People, 119 U. S. 110, 7 Sup. Ct. 108. Or upon foreign building and loan associations a tax of a certain per cent. of their gross receipts. Such a tax is in the nature of a tax on the franchise of doing business in the state. Loan Ass'n v. Norman (Ky.) 32 S. W. 952. Or it may require foreign corporations to procure a license, and as a condition to pay a certain sum on each dollar of their capital stock. Such a tax is not a tax upon the franchise of the corporation, nor upon its business or property without the state. It is merely a license tax. Pembina Con. Silver Mining & Milling Co. v. Pennsylvania, 125 U. S. 181, 8 Sup. Ct. 737. In Com. v. New York, L. E. & W. R. Co., 129 Pa. St. 463, 18 Atl. 412, it was held that a state can impose a tax upon the indebtedness of a foreign corporation doing business in the state, and require the corporation to collect the tax.

PROHIBITION OF THE EXERCISE OF GREATER RIGHTS THAN ARE GIVEN DOMESTIC CORPORATIONS.

6. In a number of states it is provided by the constitution or by statute that no foreign corporation shall be allowed to transact business in the state on more favorable conditions than are prescribed by law to similar domestic corporations. These provisions are clearly valid, but, of course, they cannot give the state any right to interfere with or restrict interstate or foreign commerce. The object of such provisions as this is to produce uniformity in the powers, liabilities, duties, and restrictions of foreign and domestic corporations of like character, and bring them all under the influence of the same law. See, as to such provisions, Stevens v. Pratt, 101 Ill. 206; Barnes v. Suddard, 117 Ill. 237, 7 N. E. 477; Female Academy v. Sullivan, 116 Ill. 375, 6 N. E. 183; Pennsylvania Co. v. Bauerle, 143 Ill. 459, 33 N. E. 166.

DESIGNATION OF PLACE OF BUSINESS AND APPOINTMENT OF AGENT.

7. A very common condition imposed upon foreign corporations is the requirement that, before doing any business in the state, they shall file a certificate designating their principal place of business in the state, and an authorized agent or agents thereat to receive service of process in actions that may be brought against them in the state. The agent which a foreign corporation is required by the statutes to have at a known place of business within

Digitized by Google

the state need not be invested with any of the contractual powers which the corporation is permitted by its charter to exercise, but it is sufficient if he is authorized to accept or receive service of process. The designation of such an agent is merely for the purpose of suit against the corporation, so as to provide a means of acquiring jurisdiction over the corporation. He need not do any business, or have any power at all to do business. Nelms v. Mortgage Co., 92 Ala. 157, 9 South. 141; McCall v. Mortgage Co., 99 Ala. 427, 12 South. 806. The terms of a statute requiring foreign corporations, before they do business in the state, to designate an authorized agent, upon whom process may be served, are sufficiently complied with by a corporation, if it designates its general manager as such agent, without giving the name of any person. Goodwin v. Investment Co., 110 U. S. 1, 3 Sup. Ct. 473. Where a foreign corporation has a duly-appointed agent in the state, who has a place of business, on the inside walls of which is displayed a sign bearing the name of the corporation, and his own name as agent, and on the outside a sign bearing his own name and business, and who is authorized to receive service of process binding the corporation, there is, in the absence of statutory enactments, a sufficient compliance with a statute prohibiting a foreign corporation from doing business in the state without having a "known" place of business, and an authorized agent therein. Security Co. v. Ingram, 91 Ala. 387, 9 South. 140. Under a requirement that foreign corporations shall file with the secretary of state an instrument designating at least one known "place of business" in the state, and an agent or agents residing thereat, the certificate need not designate the store of office of such agent, but it is sufficient if it designate the store where he resides. McLeod v. Mortgage Co., 100 Ala. 496, 14 South. 409.

MISCELLANEOUS REQUIREMENTS.

8. Foreign corporations may be required to file a copy of their charter. State v. Phœnix Ins. Co., 92 Tenn. 420, 21 S. W. 893. A statute imposing conditions upon foreign corporations, and providing for a revocation of their license to do business by an executive officer of the state upon their failure to comply therewith, is not unconstitutional, as conferring judicial powers upon such officer, for the duty imposed is ministerial, not judicial, in its character. Hartford Fire Ins. Co. v. Commissioner of Insurance, 70 Mich. 485, 38 N. W. 474. A state may prohibit foreign insurance companies doing business in the state from entering into any contract with another such company, and require them to file an undertaking not to do so. Hartford Fire Ins. Co. v. Commissioner of Insurance, 70 Mich. 485, 38 N. W. 474. A state may require foreign insurance companies, and the same rule would apply to other corporations, to give security, by the deposit of money or bonds, or otherwise, for the performance of contracts which they may make with its citizens. Paul v. Virginia, 8 Wall. 168. And a state may require the agent of a foreign insurance company to retain money of the company until a loss of which he has notice is paid. Insurance Co. v. Burdett, 112 Ind. 204, 13 N. E. 705. A state may also impose upon foreign corporations doing business in the state the condition that, in any litigation arising out of its transactions in the state, it will accept as sufficient the service of process on its agents or persons specially designated. St. Clair v. Cox, 106 U. S. 350, 1 Sup. Ct. 354.

RETALIATORY STATUTES.

9. In many of the states the legislatures have enacted statutes, commonly known as retaliatory statutes. The object of these statutes is to impose upon corporations created by the laws of other states the same conditions and burdens which such other states impose upon like corporations created by the state enacting the statute. These statutes are aimed generally at foreign insurance companies. In Talbott v. Casualty Co., 74 Md. 536, 22 Atl. 395, a law of Maryland provided that "when by the laws of any other state any deposit of money * * * or prohibitions are imposed upon insurance companies incorporated * * * under the laws of this state, * * * so long as such laws continue in force the same * * * obligations and prohibitions shall be imposed * * * in this state." Code, art. 23, § 138. The New York law provided that the superintendent of insurance "shall have power to refuse admission to any company * * * applying to be permitted to transact the business of insurance in this state from any other state, * * * whenever in his judgment such refusal to admit shall best promote the interests of the

Digitized by Google

people of this state." Laws 1873, c. 593, § 2. In construing the Maryland statute it was held that it made the law of New York the law of Maryland; and Maryland companies being refused admission into New York solely upon the ground of discretion, the insurance commissioner of Maryland might exercise the same discretion, and refuse New York companies admission.

An important case under these statutes is People v. Fire Ass'n of Philadelphia, 92 N. Y. 311; Philadelphia Fire Ass'n v. People, 119 U. S. 110, 7 Sup. Ct. 108. In New York it was provided by statute (Laws 1865, c. 694, as amended by Laws 1875, c. 60), and doubtless it is still provided, that whenever the laws of any other state shall require of insurance companies incorporated under the laws of New York, and having agencies in such other states, or of the agents thereof, any deposit of securities in such state for the protection of policy holders or otherwise, or any payment of taxes, fines, penalties, certificates of authority, license fees, or otherwise, greater than the amount required for such purposes from similar companies of other states by the laws of New York, in every such case all companies of such states establishing, or which have established, an agency or agencies in New York, shall be and are required to make the same deposit for a like purpose in New York, and to pay for taxes, fines, penalties, certificates of authority, license fees, and otherwise an amount equal to the amount of such charges and payments imposed by the laws of such state upon the companies of New York and their agents. The court of appeals of New York has held that this statute is not in conflict with the state constitution, and is valid. People v. Fire Ass'n of Philadelphia, 92 N. Y. 311. And it has been upheld by the supreme court of the United States as not being in conflict with the federal constitution, but being a legitimate regulation of the right of foreign corporations to do business in the state. Philadelphia Fire Ass'n v. People, 119 U. S. 110, 7 Sup. Ct. 108.

Similar statutes have been upheld in other states. Goldsmith v. Insurance Co., 62 Ga. 379; Ohio v. Moore, 39 Ohio St. 486; State v. Western Union Mut. Life Ins. Co., 47 Ohio St. 167, 24 N. E. 392; State v. Insurance Co., 49 Ohio St. 440, 31 N. E. 658; Talbott v. Casualty Co., 74 Md. 536, 22 Atl. 395; Insurance Co. v. Welch, 29 Kan. 672; Insurance Co. v. Swigert, 104 Ill. 653; State v. Insurance Co. of North America, 115 Ind. 257, 17 N. E. 574; Blackmer v. Insurance Co., 115 Ind. 291, 17 N. E. 580; Blackmer v. Insurance Co., 115 Ind. 596, 17 N. E. 583; State v. Fidelity & Casualty Co., 77 Iowa, 648, 42 N. W. 509. Such statutes are not an unlawful delegation of the legislative power. They do not leave the conditions to be determined by the executive department of the government, but they impose the conditions themselves. Nor do they depend upon legislation by other states to put them into operation as law. People v. Fire Ass'n of Philadelphia, 92 N. Y. 311; Insurance Co. v. Swigert, 104 Ill. 653; Insurance Co. v. Welch, 29 Kan. 672.

10. These statutes, it has been held, being retaliatory, should be strictly construed, and not liberally construed, as in case of statutes of reciprocity, and they are not to be applied to any case that does not fairly fall within their letter. State v. Insurance Co., 49 Ohio St. 440, 30 N. E. 658. In Ohio it is provided: "When by the laws of any other state * * * any * * * prohibitions are imposed upon insurance companies of this state, doing business in such state, * * * so long as such laws continue in force, * * * the same prohibitions, of whatever kind, shall be imposed upon all insurance companies of such other state doing business in this state." Rev. St. § 282. Construing this statute in State v. Insurance Co., supra, after saying that it should be construed strictly, the supreme court of Ohio held that to make the statute applicable, as against a foreign insurance corporation, it must be made to appear that an Ohio company has actually been formed and is in existence, to do substantially the same kind and lines of insurance. And it was further held that the making and filing, for the purpose of profit, of articles of incorporation in the office of the secretary of state, do not make a corporation, within the meaning of the statute; that the company does not exist until the requisite stock has been subscribed and paid in and the directors chosen.

11. Some of the courts have taken a different view from the Ohio court on this point, on statutes varying very slightly from the Ohio statute. In Iowa the Code (section 1154) provides that "when by the laws of any other state * * * prohibitions are imposed or would be imposed upon insurance companies of this state doing, or that might seek to do, business in such other state," the law of that state shall exist in Iowa as against the companies of such state. In State v. Fidelity & Casualty Co., 77 Iowa, 648, 42 N. W. 509,

Digitized by Google

it was held that, in order to enforce in Iowa the provisions of the New York law against an insurance company of that state doing business in Iowa, it was not necessary that there should be any actual enforcement of the law in New York against Iowa companies; that the existence of such law was sufficient. It was also held that the fact that Iowa companies, by Iowa laws, were prohibited from making more than one kind of insurance in Iowa, and that only the same prohibition existed in New York against foreign companies, and hence did not deny Iowa companies any right which they had at home, was immaterial; that, if any prohibitions were imposed in New York against Iowa companies, the same prohibitions must be imposed in Iowa against New York companies. See, also, Insurance Co. v. Welch, 29 Kan. 672; Insurance Co. v. Swigert, 104 Ill. 653.

12. In State v. Fidelity & Casualty Ins. Co., 39 Minn. 538, 41 N. W. 108, it was held that a foreign corporation, which has complied with the laws of Minnesota, should not, as a measure of retaliation, by force of the retaliatory statute, be excluded from doing business in Minnesota, on the ground that the laws of the state where it was created would exclude Minnesota corporations from doing business there, unless it clearly appears that such is the effect of the foreign law. And in this case, as the proper effect of the statutes of New York in this particular was considered doubtful, a judgment of ouster against a New York corporation was refused.

RESTRICTIONS OF THE FEDERAL CONSTITUTION.

13. We have seen that the right of a state to prescribe conditions upon allowing foreign corporations to do business in the state, or to exclude such corporations altogether, is not affected at all by the provision of the federal constitution that the citizens of each state shall be entitled to all the privileges and immunities of citizens of the several states, or the provisions that no state shall deny to any person within its jurisdiction the equal protection of the laws, or deprive any person of his property without due process of law. Ante, §§ 3, 4. There are some provisions of the federal constitution, however, which do restrict the power of the states over foreign corporations. Of course, no state can impose conditions that are repugnant to any provision of the constitution, for that is the supreme law of the land.

PROHIBITING REMOVAL OF CAUSE TO THE FEDERAL COURTS.

14. It has been attempted by the legislatures of some of the states to prohibit foreign corporations doing business in the state from removing suits brought against them from the state into the federal courts. Such a provision, however, is clearly void, as being repugnant to the constitution and laws of the United States giving the right of removal in certain cases. Such a statute was before the supreme court of the United States in Insurance Co. v. Morse, 20 Wall. 445. A statute of Wisconsin provided that it should not be lawful for any foreign fire insurance company to transact any business in Wisconsin unless it should first appoint an attorney in that state, on whom process could be served, by filing a written instrument to that effect, containing an agreement that the company would not remove a suit for trial into the federal courts. A foreign corporation filed such an instrument, and afterwards a suit having been brought against it, sought to remove the same to the federal court. The supreme court of the United States, reversing a contrary decision by the supreme court of Wisconsin, held that (1) the constitution of the United States secured to the company an absolute right to remove the suit on compliance with the removal statute; (2) that the Wisconsin statute was an obstruction to this right, and was repugnant to the constitution of the United States, and the laws made in pursuance thereof, and was therefore illegal and void; and (3) that the agreement of the company was not one that would bind it, without reference to the statute, and could derive no force or validity from the statute. And see Doyle v. Insurance Co., 94 U. S. 535. The same question arose, under an Iowa statute, in Barron v. Burnside, 121 U. S. 186, 7 Sup. Ct. 931, and the statute was held void because it prohibited foreign corporations from removing suits into the federal courts. It was held that when it is apparent that the entire purpose of a state statute is to deprive a foreign corporation, in certain suits, of the right conferred upon it by the constitution and laws of the United States to remove a suit from the state court into the federal court, a provision of the statute making the surrender of such right a condition precedent to the granting of a permit to transact business within the state renders the statute

requiring the permit entirely void, and a prosecution of the agent of a foreign corporation, based upon such statute, cannot be sustained. Later cases holding such statutes void are Southern Pac. Co. v. Denton, 146 U. S. 207, 13 Sup. Ct. 44; Martin's Adm'r v. Baltimore & O. R. Co., 151 U. S. 684, 14 Sup. Ct. 533. And see Barling v. Bank, 1 C. C. A. 510, 50 Fed. 260.

There are decisions to the same effect in the state courts. In Com. v. East Tennessee Coal Co. (Ky.) 30 S. W. 608, a statute of Kentucky provided that any foreign corporation which should remove to a federal court, without the consent of the adverse party, any action pending against it in a court of Kentucky, or institute an action against a citizen of that state in a federal court therein, should forfeit its right to carry on business in Kentucky, and, if it should thereafter transact business therein, it should be guilty of a misdemeanor, and, upon indictment and conviction, be fined. The Kentucky court of appeals very properly followed the decisions of the supreme court of the United States, and held the provision void. And see Com. v. Jellico Coal Min. Co. (Ky.) 30 S. W. 611; Mortgage Co. v. Worsham, 76 Tex. 556, 13 S. W. 384.

It is rather surprising, when the law on this point has been so clearly settled by the supreme court of the United States, whose decisions on questions arising under the federal constitution are binding on all the courts, to find a state court upholding such a provision; but a proceeding under such a statute was upheld by the supreme court of Illinois in People v. Pavey, 151 Ill. 101, 37 N. E. 691. It does not appear from the report of the case, however, that the validity of the statute was attacked. See Goodrel v. Kreichbaum, 70 Iowa, 362, 30 N. W. 872; Insurance Co. v. Stone (Minn.) 31 N. W. 54.

CORPORATIONS EMPLOYED IN THE BUSINESS OF THE FEDERAL GOVERNMENT OR ACTING UNDER ACT OF CONGRESS.

15. A state cannot exclude altogether a foreign corporation engaged under an act of congress in the business of the general government. This question arose, and was so decided, in Pensacola Tel. Co. v. Western Union Tel. Co., 96 U. S. 1. In this case congress had passed an act (July 24, 1866) "to aid in the construction of telegraph lines, and to secure to the government the use of the same for postal, military, and other purposes"; declaring that any telegraph company then organized, or which might thereafter be organized, under the laws of any state, should have the right to construct, maintain, and operate lines of telegraph through and over any portion of the public domain of the United States, over and along any of the military or post roads of the United States, which had been, or might thereafter be, declared such by act of congress, and over, under, or across the navigable streams or waters of the United States, upon certain conditions specified in the act. The court held that the act extended not only to such military and post roads as were upon the public domain, but to all the post roads and navigable waters of the United States, and amounted, in effect, to a prohibition of all state monopolies in telegraphing. The Western Union Telegraph Company accepted the conditions of the act; and it was held that, in constructing its lines in a state, it acted as an agency of commerce and intercommunication, under the act of congress, and that the state could not exclude it by the grant of an exclusive privilege to another company.

In Stockton v. Railroad Co., 32 Fed. 9, an act of congress had authorized a New York corporation to construct and maintain a railroad bridge across the Staten Island Sound, and established the same as a post road. It was held that this was within the grant of power to congress to regulate commerce, and that the legislature of New Jersey could not prohibit the corporation from erecting the bridge.

In Postal Tel. Cable Co. v. City of Charleston, 153 U. S. 692, 14 Sup. Ct. 1094, it was held that a license tax imposed by a city upon telegraph companies "for business done exclusively within the city, * * * and not including any business done to or from points without the state," or "for the United States," was not invalid, as applied to a company partly engaged in transmitting interstate messages, and which had accepted the provisions of the act of July 24, 1866, and thereby become an agency of the United States. 56 Fed. 419, affirmed.

OBLIGATION OF CONTRACTS.

16. If a state allows a foreign corporation to come within its limits and make contracts, such contracts are protected by the clause of the federal constitu-

Digitized by Google

tion prohibiting the states from passing any laws impairing the obligation of contracts, and the state cannot by any subsequent legislation affect their validity. Statutes, therefore, regulating or imposing conditions upon foreign corporations are not to be construed as affecting contracts previously made, unless such an intention is clear. And if they are so construed, to this extent they are void. See St. Louis, A. & T. Ry. Co. v. Fire Ass'n, 55 Ark. 163, 18 S. W. 43; Loan Ass'n v. Rainbolt, 48 Neb. 434, 67 N. W. 493; Railroad Co. v. Stone, 20 Fed. 468.

In New York, L. E. & W. R. Co. v. Com., 153 U. S. 628, 14 Sup. Ct. 952, it was held that a statute of Pennsylvania requiring corporations doing business in the state to deduct from the interest on their bonds owned by residents of the state, and pay to the state, the tax imposed on such bonds by the act, impaired the obligation of the contract arising from previous acts authorizing a foreign railway company to construct and operate part of its road through the state on payment of a certain annual sum, and other conditions, on which the company in good faith acted, in so far as said act required the company to assess and collect, in the state of its creation, such tax on bonds issued before the act, under authority of that state, having interest coupons payable in that state only, both bonds and coupons being payable to bearer, as such duty could not be imposed as an additional condition on the right acquired to maintain and operate the road, or as a regulation of the business or property of the company within the state. 145 Pa. St. 38, 22 Atl. 212, reversed.

Contracts, in this connection, must be distinguished from mere licenses. In Steel Co. v. Taylor (Com. Pl.) 1 Ohio Land Dec. 180, 1 O. C. D. 242, it was held that a statute of Ohio requiring a foreign corporation other than a banking or insurance company, as a prerequisite to doing business in the state, to procure a certificate of compliance with the law, and to pay a fee therefor, graduated by the amount of its capital stock, was a mere license, and not a contract between the state and a corporation paying such fee, and hence a statute which materially increased the fee to be paid by foreign corporations then doing or which might thereafter do business in the state was not unconstitutional, as impairing the obligation of contracts. And see Steel Co. v. Taylor, 3 Ohio N. P. 152; Com. v. New York, L. E. & W. R. Co., 129 Pa. St. 463, 18 Atl. 412.

DEPRIVATION OF PROPERTY WITHOUT DUE PROCESS OF LAW.

17. It has been pointed out that for a state to exclude a foreign corporation, or to impose conditions upon allowing it to do business in the state, is not a violation of the constitutional prohibition against depriving persons of their property without due process of law. Ante, § 4.

A state, however, cannot directly or indirectly deprive a foreign corporation, without due process of law, of property which the corporation has acquired in the state with the express or implied consent of the state, as by prohibiting disposition of the same by the corporation. Railroad Co. v. Evans, 14 C. C. A. 116, 66 Fed. 809.

INTERFERENCE WITH INTERSTATE OR FOREIGN COMMERCE—CONST. U. S. ART. 1, § 8.

18. No state can pass any law which amounts to a regulation of or interference with interstate or foreign commerce, for article 1, § 8, of the federal constitution vests this power exclusively in congress. This provision applies as well to commerce carried on by foreign corporations as to commerce carried on by individuals. It is well settled, therefore, by repeated decisions of the supreme court of the United States, which, of course, are controlling as far as this question is concerned, that a state cannot, under the guise of a license tax, exclude from its jurisdiction a foreign corporation engaged in interstate or foreign commerce, or impose any burdens upon such commerce within its limits. Norfolk & W. R. Co. v. Pennsylvania, 136 U. S. 114, 10 Sup. Ct. 958; Manufacturing Co. v. Ferguson, 113 U. S. 727, 5 Sup. Ct. 739; Wells, Fargo & Co. v. Northern Pac. Ry. Co., 23 Fed. 469; Com. v. Smith, 92 Ky. 38, 17 S. W. 187; Osborne v. State, 33 Fla. 162, 14 South. 588; and cases cited in the following sections.

SAME—RAILROAD, STEAMSHIP, AND EXPRESS COMPANIES.

19. The transportation of goods and of passengers by railroad, steamship, and express companies from one state into or through another, or to or from a

Digitized by Google

foreign country, is commerce, within the meaning of the constitution. And any state law which amounts to a regulation of or interference with such commerce is void. A state cannot, directly or indirectly, prohibit a railroad company from bringing any article of commerce into the state from another state. Nor can it require the company to comply with any conditions before doing so, as this amounts to a regulation of interstate commerce. Bowman v. Railway Co., 125 U. S. 465, 8 Sup. Ct. 689, 1062.

In Crutcher v. Kentucky, 141 U. S. 47, 11 Sup. Ct. 851, it was held that a Kentucky statute requiring the agent of a foreign express company doing business in the state to pay a license fee of $5, and deposit with the auditor a statement of the company's assets and liabilities, showing that it has an actual capital of at least $150,000, was unconstitutional, as an interference with interstate commerce, in so far as it applies to companies transporting goods between points in the state and points in other states, though the company also transported between points within the state.

In Clyde S. S. Co. v. City Council of Charleston, 76 Fed. 46, it was held that a foreign corporation, whose vessels, while en route between the ports of two different states, stop at a port of a third state, is not liable for a license tax at that port because it there leases a wharf or landing; has plant and machinery for the taking in and discharge of freight and passengers; engages stevedores and longshoremen, who are in its sole employment; has there an agent and subordinate clerks, an office, with furniture, books, and appliances; and keeps a bank account and occasionally purchases supplies there,—since all such operations are an essential and integral part of its interstate commerce business.

20. A state cannot impose a tax upon freight or passengers carried by a foreign railroad, steamship, or express corporation, either through the state, or from a point in the state into another state, or into the state from a point without, nor upon the business of such carriage. In either case the tax is on interstate commerce. Case of State Freight Tax, 15 Wall. 232; Fargo v. State, 121 U. S. 230, 7 Sup. Ct. 857; People v. Campagnie Generale Transatlantique, 10 Fed. 357; State v. Pullman Palace Car Co., 16 Fed. 193; Express Co. v. Hemmingway, 39 Fed. 60; Express Co. v. Allen, Id. 712; Com. v. Smith, 92 Ky. 38, 17 S. W. 187; Indiana v. American Exp. Co., Fed. Cas. No. 7,021; Osborne v. State, 33 Fla. 162, 14 South. 588.

21. But a state may tax the land or other property of a foreign railroad or express company, including its rolling stock, situated within the state, though engaged in interstate commerce. Marye v. Railroad Co., 127 U. S. 117, 8 Sup. Ct. 1037; Pullman's Palace Car Co. v. Pennsylvania, 141 U. S. 18, 11 Sup. Ct. 876; Railway Co. v. Backus, 154 U. S. 421, 14 Sup. Ct. 1114; Id., 154 U. S. 439, 14 Sup. Ct. 1122; Railroad Co. v. Allen, 22 Fed. 376; Reinhart v. McDonald, 76 Fed. 403; Thomson v. Railroad, 9 Wall. 579; Railroad Co. v. Barnes, 2 N. D. 310, 51 N. W. 386; Com. v. New York, P. & O. R. Co., 145 Pa. St. 38, 22 Atl. 212; State v. New York, N. H. & H. R. Co., 60 Conn. 326, 22 Atl. 765; Com. v. New York, L. E. & W. R. Co., 129 Pa. St. 463, 18 Atl. 412; State v. Berry, 52 N. J. Law, 308, 19 Atl. 665; Railroad Co. v. Church, 17 Colo. 1, 28 Pac. 468. But see Bain v. Railroad Co., 105 N. C. 363, 11 S. E. 311. And it may tax or regulate the business done by such a corporation wholly within the state. Express Co. v. Hemmingway, 39 Fed. 60; Express Co. v. Seibert, 44 Fed. 310; Id., 142 U. S. 339, 12 Sup. Ct. 250; Osborne v. State, 33 Fla. 162, 14 South. 588; City of Anniston v. Southern Ry. Co. (Ala.) 20 South. 915. But a privilege tax imposed upon sleeping cars, the property of a corporation having no domicile in the state imposing the tax, the cars themselves having no situs for the purposes of taxation in such state, is an interference with interstate commerce, and cannot be enforced when such cars are used in passing and repassing through the state. Pickard v. Car Co., 117 U. S. 34, 6 Sup. Ct. 635; Car Co. v. Nolan, 22 Fed. 276. Since the state may tax the sleeping cars and other rolling stock of a foreign corporation within the state, it may impose such a tax in the ratio which the number of miles of line within the state bears to the total number of miles of the whole line. Pullman's Palace Car Co. v. Pennsylvania, 141 U. S. 18, 11 Sup. Ct. 876; Railway Co. v. Backus, 154 U. S. 421, 14 Sup. Ct. 1114; Board of Assessors of Parish of Orleans v. Pullman's Palace Car Co., 8 C. C. A. 490, 60 Fed. 37, affirming 55 Fed. 206.

22. A state may tax the money of a foreign corporation actually within the state, after it has passed beyond the stage of compensation for carrying per-

Digitized by Google

sons or property, as it may tax any other money or property within its limits. But it cannot tax the receipts of foreign corporations engaged in interstate commerce before they have passed into this stage. A state statute levying a tax upon the gross receipts of railroad or steamship companies for the carriage of freight and passengers into, out of, or through the state, is a tax upon the commerce out of which the money arises, and is unconstitutional. Fargo v. Michigan, 121 U. S. 230, 7 Sup. Ct. 857; Philadelphia & Southern S. S. Co. v. Pennsylvania, 122 U. S. 326, 7 Sup. Ct. 1118; Vermont & C. R. Co. v. Vermont Cent. R. Co., 63 Vt. 1, 21 Atl. 262.

In Maine v. Grand Trunk Ry. Co., 142 U. S. 217, 12 Sup. Ct. 121, an act of Maine required every corporation, etc., operating a railroad in the state, to pay "an annual excise tax for the privilege of exercising its franchises," the amount of the tax to be determined according to a sliding scale, proportioned to the average gross earnings per mile within the state for the year preceding the levy of the tax. It was held that the method of determining the amount of the tax was merely a way of ascertaining the value of the privilege, and did not render the tax a tax upon the receipts themselves, and hence, in its application to railroads which entered the state from another state or from Canada, the act did not operate as a regulation of interstate or foreign commerce.

23. A railroad company which has become a link in a through line of road, over which, as part of its business, freight and passengers are carried into and out of the state, is engaged in interstate commerce; and a tax assessed against such a company by a state through which the through line passes, as a condition precedent to its keeping an office in such state for the use of its officers, agents, and employés, is a tax on the means by which the company is enabled to carry on its business of interstate commerce, and therefore unconstitutional. Norfolk & W. R. Co. v. Pennsylvania, 136 U. S. 114, 10 Sup. Ct. 958, reversing 114 Pa. St. 256, 6 Atl. 45.

In Lehigh Val. R. Co. v. Pennsylvania, 145 U. S. 192, 12 Sup. Ct. 806, it was held that the transportation of goods and passengers by continuous carriage from one point in a state to another point in the same state was not interstate commerce, within the meaning of the federal constitution, although for a part of the route it was over the soil of another state; and therefore it was within the power of the state wherein it began and ended to impose a tax on its gross receipts. 17 Atl. 179, 129 Pa. St. 308, 18 Atl. 125, affirmed.

24. In McCall v. California, 136 U. S. 104, 10 Sup. Ct. 881, it was held that the imposition of a license tax upon a railroad agency in San Francisco was unconstitutional, as a regulation of commerce, in so far as it applied to an agent who solicited traffic in that city over a railroad operated between Chicago and New York, though he sold no tickets, and neither received nor paid out any money or other valuable consideration therefor, as his business was carried on to assist the traffic of his road. This case shows that the limitation on the power of the state to tax interstate commerce extends to all such commerce, though it may not pass through its territory.

SAME—TELEGRAPH AND TELEPHONE COMPANIES.

25. Telegraphic or telephone communication is commerce, and if carried on between different states is interstate commerce. And it follows that where a foreign telegraph company, which has established a line in the state under authority of congress, is doing the business of transmitting messages between that state and another, the state cannot impose upon it a license tax, or require it to take out a license for such business. A general license tax on such a company affects its entire business, interstate as well as domestic or internal, and is unconstitutional. The property of a foreign telegraph company, situated within a state, may be taxed by the state like other property; but its business of an interstate character cannot be taxed. Leloup v. Port of Mobile, 127 U. S. 640, 8 Sup. Ct. 1380; Telegraph Co. v. Pendleton, 122 U. S. 347, 7 Sup. Ct. 1126; City of St. Louis v. W. U. Tel. Co., 39 Fed. 59; Com. v. Smith, 92 Ky. 38, 17 S. W. 187. And see, as to telephone companies, In re Pennsylvania Tel. Co., 48 N. J. Eq. 91, 20 Atl. 846.

A state in which a foreign telegraph company has established a line cannot impose a tax upon messages sent into, out of, or through the state, nor upon receipts from such messages. W. U. Tel. Co. v. Texas, 105 U. S. 460; Ratterman v. Telegraph Co., 127 U. S. 411, 8 Sup. Ct. 1127; W. U. Tel. Co. v. Pennsylvania, 128 U. S. 39, 9 Sup. Ct. 6; W. U. Tel. Co. v. Alabama State

Digitized by Google

Board of Assessment, 132 U. S. 472, 10 Sup. Ct. 161; W. U. Tel. Co. v. City of Fremont, 39 Neb. 692, 58 N. W. 415. Contra, W. U. Tel. Co. v. Com., 110 Pa. St. 405, 20 Atl. 720. But it can tax messages sent from one point in the state to another point in the state, or the business done wholly within the state. W. U. Tel. Co. v. Texas, 105 U. S. 460; W. U. Tel. Co. v. Attorney General of Massachusetts, 125 U. S. 530, 8 Sup. Ct. 963; W. U. Tel. Co. v. Pennsylvania, 128 U. S. 39, 9 Sup. Ct. 6; W. U. Tel. Co. v. Alabama State Board of Assessment, 132 U. S. 472, 10 Sup. Ct. 161; Ratterman v. Telegraph Co., 127 U. S. 411, 8 Sup. Ct. 1127; Postal Tel. Cable Co. v. City of Charleston, 153 U. S. 692, 14 Sup. Ct. 1094; W. U. Tel. Co. v. City Council of Charleston, 56 Fed. 419; W. U. Tel. Co. v. City of Freemont, 39 Neb. 692, 58 N. W. 415. And a state can tax the property of a foreign telegraph company situated within the state. W. U. Tel. Co. v. Attorney General of Massachusetts, 125 U. S. 530, 8 Sup. Ct. 961; Ratterman v. Telegraph Co., 127 U. S. 411, 8 Sup. Ct. 1127; Massachusetts v. W. U. Tel. Co., 141 U. S. 40, 11 Sup. Ct. 889; Telegraph Cable Co. v. Adams, 71 Miss. 555, 14 South. 36; People v. Tierey, 57 Hun, 357, 10 N. Y. Supp. 940.

SAME—INSURANCE.

26. The business of insurance is not commerce, and a corporation of one country or state, having an agency in another state or country, by which it conducts its business in the latter, is not engaged in interstate or foreign commerce, so as to prevent the latter state from imposing a tax or license fee or other conditions upon its right to maintain such agency. Paul v. Virginia, 8 Wall. 168; Ducat v. Chicago, 10 Wall. 410; Liverpool Ins. Co. v. Massachusetts, Id. 566; Philadelphia Fire Ass'n v. People, 119 U. S. 110, 7 Sup. Ct. 108; State v. Phipps, 50 Kan. 609, 31 Pac. 1097; State v. Liverpool, L. & G. Ins. Co., 40 La. Ann. 463, 4 South. 504.

SAME—MERCANTILE AGENCIES.

27. Mercantile or commercial agencies are not such legitimate and useful instruments of commerce or commercial intercourse as to put them exclusively under the regulation of congress, and free from state control; and a state statute imposing regulations and conditions upon corporations of other states engaged in such business within the limits of the state is not an interference with interstate commerce. State v. Morgan, 2 S. D. 32, 48 N. W. 314.

SAME—FERRY CORPORATIONS.

28. Ferrying across a navigable river between two states is interstate commerce, and a state, therefore, cannot impose a tax upon the business of a foreign corporation operating a ferry across a river between it and the state by which the corporation was created. Gloucester Ferry Co. v. Pennsylvania, 114 U. S. 196, 5 Sup. Ct. 826.

SAME—MANUFACTURING AND TRADING CORPORATIONS.

29. A state cannot, by imposing conditions, or a tax, or otherwise, prohibit a foreign manufacturing or trading corporation from selling in the state, or contracting to sell, either by mail or by agents in the state, goods to be shipped into the state. This would be an interference with interstate commerce. Manufacturing Co. v. Ferguson, 113 U. S. 727, 5 Sup. Ct. 739; Corson v. Maryland, 120 U. S. 502, 7 Sup. Ct. 655; Lyng v. Michigan, 135 U. S. 161, 10 Sup. Ct. 725; Williams v. Hintermeister, 26 Fed. 889; American Fertilizing Co. v. Board of Agriculture, 43 Fed. 609; State v. Lagarde, 60 Fed. 186; Georgia Packing Co. v. Mayor, etc., of City of Macon, Id. 774; Manufacturing Co. v. Dix, 64 Fed. 406; Toledo Commercial Co. v. Glen Manuf'g Co. (Ohio Sup.) 45 N. E. 197; Gunn v. Machine Co., 57 Ark. 24, 20 S. W. 591; Manufacturing Co. v. Hardee, 4 N. M. 175, 16 Pac. 605; Ware v. Shoe Co., 92 Ala. 145, 9 South. 136; Cook v. Brick Co., 98 Ala. 409, 12 South. 918; Manufacturing Co. v. Gorten, 93 Tenn. 590, 27 S. W. 971; Kindel v. Lithographing Co., 19 Colo. 310, 35 Pac. 538; Bateman v. Milling Co., 1 Tex. Civ. App. 90, 20 S. W. 931; H. Zuberbier Co. v. Harris (Tex. Civ. App.) 35 S. W. 403; Keating Implement & Machine Co. v. Favorite Carriage Co., Id. 417; Starch Co. v. Bateman (Tex. Civ. App.) 22 S. W. 771; Lyons-Thomas Hardware Co. v. Reading Hardware Co. (Tex. Civ. App.) 21 S. W. 300; Varnish Co. v. Connell, 10 Misc. Rep. 553, 32 N. Y. Supp. 492; Manufacturing Co. v. Connell, 88 Hun, 254, 34 N. Y. Supp. 717; Lumber Co. v. Holbert, 5 App. Div. 559, 39 N. Y. Supp. 432.

Digitized by Google

In Gunn v. Machine Co., 57 Ark. 24, 20 S. W. 591, a statute of Arkansas provided that before any foreign corporation should begin business in the state it should file a certificate in the office of the secretary of state, designating an agent on whom process might be served, and stating its principal place of business in the state, and that, if any corporation should fail to do so, all its contracts with citizens of the state should be void as to the corporation. Plaintiff, a foreign corporation, without filing the certificate required by law, entered into a contract with a citizen of the state by which it agreed to sell goods to him at stipulated prices and on credit. Defendant became surety on a bond executed at the same time as the contract to secure payment for goods which might be sold thereunder, both the contract and the bond being executed in the state. It was held that plaintiff could recover on the bond, since the transactions of the parties were interstate commerce, and could not be affected by the statute.

It follows that a state cannot impose a license tax upon brokers, drummers, or peddlers for foreign corporations soliciting orders in the state for goods to be shipped into the state. Robbins v. Taxing Dist., 120 U. S. 489, 7 Sup. Ct. 592; Leloup v. Port of Mobile, 127 U. S. 640, 8 Sup. Ct. 1380; Asher v. Texas, 128 U. S. 129, 9 Sup. Ct. 1; Stoutenburgh v. Hennick, 129 U. S. 141, 9 Sup. Ct. 256; McCall v. California, 136 U. S. 104, 10 Sup. Ct. 881; Brennan v. City of Titusville, 153 U. S. 289, 14 Sup. Ct. 829; In re Rozelle, 57 Fed. 155; In re Watson, 15 Fed. 511; In re Spain, 47 Fed. 208; In re Houston, Id. 539; In re Nichols, 48 Fed. 164; In re White, 43 Fed. 913; Ex parte Stockton, 33 Fed. 95; In re Kimmel, 41 Fed. 775; In re Tyerman, 48 Fed. 167; Manufacturing Co. v. Dix, 64 Fed. 406; In re Flinn, 57 Fed. 496; Hurford v. State, 91 Tenn. 669, 20 S. W. 201; Clements v. Town of Casper (Wyo.) 35 Pac. 472; Range Co. v. Johnson, 84 Ga. 754, 11 S. E. 233; Rodgers v. McCoy, 6 Dak. 238, 44 N. W. 990; City of Bloomington v. Bourland, 137 Ill. 534, 27 N. E. 692; McLaughlin v. City of South Bend, 126 Ind. 471, 26 N. E. 185; Martin v. Town of Rosedale, 130 Ind. 109, 29 N. E. 410; Ex parte Thomas, 71 Cal. 204, 12 Pac. 53; Overton v. City of Vicksburg, 70 Miss. 558, 13 South. 226; Richardson v. State (Miss.) 11 South. 934; McClellan v. Pettigrew, 44 La. Ann. 356, 10 South. 853; State v. Agee, 83 Ala. 110, 3 South. 856; Ex parte Murray, 93 Ala. 78, 8 South. 868; Baxter v. Thomas (Okl.) 46 Pac. 479.

30. This provision of the constitution, however, does not extend to sales by vendees or by agents of foreign corporations of goods which have already been sent into the state. See Machine Co. v. Gage, 100 U. S. 676; Emert v. State, 156 U. S. 296, 15 Sup. Ct. 367, affirming State v. Emert, 103 Mo. 241, 15 S. W. 81; Ex parte Brown, 48 Fed. 435; Hynes v. Briggs, 41 Fed. 468; Manufacturing Co. v. Wright, 33 Fed. 121; In re Flinn, 57 Fed. 496; State v. Smithson, 106 Mo. 149, 17 S. W. 221; Rash v. Farley, 91 Ky. 344, 15 S. W. 862; State v. Wessell, 109 N. C. 735, 14 S. E. 391; Ex parte Butin, 28 Tex. App. 304, 13 S. W. 10; Manufacturing Co. v. Wright (Ga.) 25 S. E. 249.

It is not a violation of the commerce clause of the constitution to require a foreign manufacturing or mercantile corporation, engaged in interstate commerce, to procure a license before keeping an office within the state for the use of its officers, stockholders, agents, or employés, and to pay therefor a certain sum on each dollar of its capital stock, provided there is no attempt to prohibit the transportation or sale of the corporation's products in the state. Pembina Con. Silver Mining & Milling Co. v. Pennsylvania, 125 U. S. 181, 8 Sup. Ct. 737.

In Ficklen v. Taxing Dist., 145 U. S. 1, 12 Sup. Ct. 810, a Tennessee statute relating to the taxing district of Shelby county, Tenn., required every dealer in merchandise of whatever kind to pay an annual license tax, and, in addition thereto, if he employed no capital, a percentage on his gross yearly commissions or charges, payment of such percentage to be secured by a bond given on the issuance of the license. It was held that one who took out a license and gave the bond could not afterwards escape payment of the percentage tax on the ground that his business for the year consisted entirely in taking orders for nonresident merchants, and that the tax was therefore a burden on interstate commerce.

In Horn Silver Min. Co. v. State, 143 U. S. 305, 12 Sup. Ct. 403, it was held that, since a state may impose upon foreign corporations (including those organized under the laws of other states) any conditions it may see fit as a pre-

Digitized by Google

requisite to their doing any business within its borders, an act of New York exacting from all corporations doing business in the state a tax proportioned to the total amount of their capital stock, without regard to what part thereof was employed within the state, or to the amount or kind of business done there, could not be impeached on the ground of repugnancy to any provisions of the federal constitution; that the tax is purely a franchise tax, and, even as applied to a corporation engaged in bringing the products of other states into New York for sale, could not be considered as a tax upon interstate commerce.

WHAT CONSTITUTES "DOING BUSINESS" IN THE STATE.

31. In many states there are statutes prohibiting foreign corporations from "doing business," or "doing any business," in the state, until they have complied with prescribed conditions. A question has arisen as to what constitutes "doing business" in the state, within the meaning of the statute, and upon this question the courts have not agreed. The supreme court, in Manufacturing Co. v. Ferguson, 113 U. S. 727, 5 Sup. Ct. 739, held that such a statute of Colorado did not apply to the doing of a single act of business, where there was no purpose to do any other business or have a place of business in the state. The Colorado constitution provided as follows: "No foreign corporation shall do any business in this state without having one or more known places of business, and an authorized agent or agents in the same upon whom process may be served." Article 15, § 10. And the statute under consideration provided that foreign corporations should, before being permitted "to do any business" in the state, make and file a certificate, in the county in which the business should be "carried on," designating the principal place where the business should be carried on, and an authorized agent or agents, residing at its principal place of business, upon whom process might be served. A foreign manufacturing corporation having no place of business in the state, and not having filed the certificate required by the act, made a single contract in the state for the sale of an article manufactured by it in the state of its residence. In a suit brought by it for breach of this contract, the defense was that it had not complied with the statute, so as to acquire a right to do business in the state, and that the contract was therefore void. The lower court was divided. McCrary, Circuit Judge, held the statute applicable, and Hallett, District Judge, dissented, the former's view, of course, prevailing. On error, the supreme court reversed the judgment, holding that, construing the statute in connection with the constitutional provision, it did not apply to a single act of business, where there was no purpose to do any other business, or to have a place of business in the state.

And in People v. Horn Silver Min. Co., 105 N. Y. 76, 11 N. E. 155, there is dictum to the effect that a statute of New York taxing foreign corporations "doing business" in the state does not apply to a foreign mining corporation keeping an office in New York, where meetings of the directors are held, transfer books kept, dividends declared and paid, and other business merely incidental to the regular business of the corporation is done. This, however, is going rather far.

In Gilchrist v. Railroad Co., 47 Fed. 593, following Manufacturing Co. v. Ferguson, supra, Judge Knowles held that a Montana statute requiring a foreign corporation, before doing business in the state, to file in the county wherein it intends to carry on business a copy of its charter and certain verified statements as to its capital, did not prevent a foreign trust company which had not complied therewith from purchasing securities of a railroad company in the state, and taking a mortgage upon its property to secure them.

In Dry Goods Co. v. Lester, 60 Ark. 120, 29 S. W. 34, it was held that the taking of a single mortgage by a foreign corporation to secure a past-due debt, with no intention of transacting other business of the kind in the state, was not "doing business" within the meaning of the Arkansas statute.

For other cases holding that a single isolated act of business is not doing business in the state, within the meaning of the statutes, see Manufacturing Co. v. Foster, 4 Dak. 329, 30 N. W. 166; Iron Works v. Cohen, 7 Colo. App. 341, 43 Pac. 667.

32. Some of the courts have refused to follow the decision of the supreme court of the United States in Manufacturing Co. v. Ferguson, supra, that a single act of business does not constitute "doing business" in the state, within

Digitized by Google

the meaning of the statutes. In Alabama it is declared by the constitution that no foreign corporation shall do "any business" in the state without having at least one known place of business and an authorized agent therein. In Farrior v. Security Co., 88 Ala. 275, 7 South. 200, it was held that this provision prohibited the single act of making one loan of money, and taking a mortgage to secure it, in Alabama, by a foreign corporation engaged in the business of loaning money on mortgages. In that case it was said:

"In engaging in such a transaction the complainant was in the exercise of its chief corporate function as imported by its very name, and as admitted by the bill. The prohibition of the constitution is against 'doing any business in this state' without compliance with the conditions specified. The doing of a single act of business, if it be in the exercise of a corporate function, is as much prohibited as the doing of a hundred such acts; and it is just as much opposed to the policy of the constitution, which is to protect our citizens against the fraud and imposition of insolvent and unreliable corporations, and to place them in an attitude to be reached by legal process from our courts in the event of any existing necessity to bring suit against them to vindicate a legal right, or to contest the validity of any contract made by or with them. The phrase 'doing any business' is more comprehensive in meaning than the carrying on or engaging in business generally, which involves the idea of continuance, or the repetition of like acts. All the adjudged cases, so far as we have examined, in and out of this state, assume this to be true, except the case of Manufacturing Co. v. Ferguson, 113 U. S. 727, 5 Sup. Ct. 739; 2 Mor. Priv. Corp. (2d Ed.) §§ 661-665, and cases cited. There it was said that a clause in the constitution of Colorado like the one here under consideration was not to be construed to prohibit a single act, but only 'the carrying on of business' by a foreign corporation. The act there done was the making of a contract in Colorado to manufacture certain machinery in Ohio, to be delivered in the latter state for transportation to the purchasers in the former. The promise was a mere agreement to deliver goods in another state, and possibly was not the unlawful exercise of a corporate function. Beard v. Publishing Co., 71 Ala. 60. However that may be, we do not concur in the construction given, in which, also, two of the judges of the court rendering the decision, it seems, did not agree. Their concurrence in the judgment was placed solely on the ground that the prohibition contained in the Colorado constitution, when directed against a sale of that character, would be an attempted regulation of commerce between the states, and on this account void for repugnancy to the federal constitution."

And see State v. Bristol Sav. Bank, 108 Ala. 3, 18 South. 533.

In Pennsylvania Co. v. Bauerle, 143 Ill. 459, 33 N. E. 166, it was held that a trust company incorporated in Pennsylvania, which received by devise land in Illinois, with power to sell and lease the same, and which asserted title to such land, made a contract for its sale, and brought suit to enforce such contract, was doing business in Illinois, within the purview of a statute which declared that foreign corporations doing business in this state should be subjected to all the liabilities, restrictions, and duties imposed upon corporations of like character organized under the general laws of Illinois, and that it had, therefore, no power to sell the land until compliance with a statute declaring that trust companies incorporated under the general laws of the state should deposit $200,000 with the auditor of public accounts before accepting any appointment as assignee, trustee, executor, or guardian.

33. The sound rule of construction is that, if a foreign corporation does any of its ordinary business in the state, it is within a statute imposing conditions upon such corporations "doing business" in the state, though by far the greater part of its business is done, and it has its principal offices, etc., in the state by which it was created. In People v. Horn Silver Min. Co., 105 N. Y. 76, 11 N. E. 155, it was held that though an occasional business transaction by a foreign mining corporation in New York, as keeping an office where meetings of directors are held, transfer books kept, dividends declared and paid, and other business merely incidental to the regular business of the corporation, may not bring the corporation within an act taxing foreign corporations "doing business" in the state, yet when all these things are done, and, besides, its president, secretary, and treasurer, have their offices in the state, and its silver bullion is all sold there, and the proceeds received there, some of the proceeds loaned thereon, and some used there, such a substantial part of its business is done there as will bring it within the act.

34. The statutes are intended only to prohibit foreign corporations from carrying on any part of their ordinary business in the state, as, for instance, to prohibit foreign insurance companies from issuing policies of insurance, foreign loan and mortgage companies from making loans and taking mortgages to secure them, foreign manufacturing and trading companies from maintaining a place of business and selling their goods, etc. They are not intended to

Digitized by Google

prohibit an act or acts by a foreign corporation not in the way of its ordinary business.

In Colorado Iron-Works v. Sierra Grande Min. Co., 15 Colo. 499, 25 Pac. 325, it was held that a single purchase of machinery within the state by a foreign mining corporation, to be transported to and set up in the state of its domicile, was not within a statute prohibiting foreign corporations from doing business within the state until they have filed a certificate designating their principal place of business within the state, and appointing an agent for service of process. Obviously the statute was not intended to cover cases like this. A state legislature would be very foolish to prohibit sales by the residents and manufacturers of the state to corporations of other states. See, also, Tabor v. Manufacturing Co., 11 Colo. 419, 18 Pac. 537.

In Payson v. Withers, Fed. Cas. No. 10,864, it was held that for an agent to solicit subscriptions in the state to the capital stock of a foreign corporation was not doing business in the state, within the meaning of an Indiana statute.

In Mineral Co. v. Clute, 7 Misc. Rep. 123, 27 N. Y. Supp. 342, it was held that a mere consignment of goods by a foreign corporation to factors in New York was not doing business in New York, within a statute requiring every foreign corporation to obtain a certificate of authority before it can sue on any contract made in the state.

The prosecution or defense of an action is not doing business in the state, within the meaning of the statutes. Christian v. Mortgage Co., 89 Ala. 198, 7 South. 427; Ginn v. Security Co., 92 Ala. 135, 8 South. 388; McCall v. Mortgage Co., 99 Ala. 427, 12 South. 806; Cook v. Brick Co., 98 Ala. 409, 12 South. 918; Powder River Cattle Co. v. Commissioners of Custer Co., 9 Mont. 145, 22 Pac. 383; St. Louis, A. & T. Ry. Co. v. Fire Ass'n, 55 Ark. 163, 18 S. W. 43; Mandel v. Cattle Co., 154 Ill. 177, 40 N. E. 462.

So it has been held that care of unused property and payment of taxes thereon, on which payment was essential to preserve the owner's title, were not the transacting of business in the county where such property was situated, within constitutional and statutory provisions, so as to give the courts of such county jurisdiction of a personal action against the company. Sullivan v. Timber Co., 103 Ala. 371, 15 South. 941. In this case it was said: "The mere presence of an agent within the state, or within a particular county, authorized to transact particular business, not involving an exercise of the corporate powers or franchises, not a part of the business the corporation was created and organized to transact, is not within the proper meaning of the phrases 'do business' or 'does business,' as employed in the constitution and the statute. 2 Beach, Priv. Corp. §§ 416, 890; D. S. Morgan & Co. v. White, 101 Ind. 413; Clews v. Iron Co., 44 Fed. 31; Bentlif v. Finance Corp., Id. 667; Carpenter v. Air-Brake Co., 32 Fed. 434; St. Louis Wire-Mill Co. v. Consolidated Barb-Wire Co., Id. 802; U. S. v. American Bell Tel. Co., 29 Fed. 17. In Beard v. Publishing Co., 71 Ala. 60, it was decided that the company, having an agent in the state to receive subscriptions to the newspaper it was publishing, and to collect such subscriptions, was not doing business, in the meaning of the constitution; and it was said: 'There must be a doing of some of the works, or an exercise of some of the functions, for which the corporation was created, to bring the case within the clause,'—referring to the first clause of the fourth section. In Christian v. Mortgage Co., 89 Ala. 198, 7 South. 427, it was held that the prosecution or defense of an action in the courts of the state is not the doing of business, within the meaning of the constitution; and according to all the authorities, construing similar constitutional or statutory provisions, having in view the like objects or purposes, there are many acts of business a foreign corporation may do without coming within the constitutional or statutory provision. 2 Mor. Priv. Corp. §§ 661, 662. The real test is that applied in Beard v. Publishing Co., supra: Is the corporation engaged in the transaction of business, or any part thereof, it was created and organized to transact? If it be, it 'does business,' within the meaning of the constitution. If it be not,—if the act it is doing or has done is not within its general powers and franchises,—it is not the business to which the constitutional requirement is directed."

35. This question has frequently arisen in cases where it was sought to obtain jurisdiction in personam against a foreign corporation by service of process on an officer or agent in the state, under a statute providing for such

Digitized by Google

service where corporations were doing business in the state. In treating of this subject, in U. S. v. American Bell Tel. Co., 29 Fed. 17, 35, Judge Jackson said: "It cannot be held sufficient to give this court jurisdiction in personam over a foreign corporation that it has property rights, however extensive, within the district, or that it has pecuniary interests, however valuable, in business managed and conducted by others. It must itself be carrying on business in its own right, on its own responsibility, and for its own account, and through or by means of its own agents, officers, or representatives, in order to bring it within the operation of the laws of a state other than that in which it is incorporated, making it amenable to a suit there as a condition of its doing business in such state." An Ohio statute was involved in this suit, which the court construed as applying "only to such foreign corporations as carry on business in the state," using this language: "When a foreign corporation carries on its corporate business, or some substantial part thereof, in this state, by means of an agent or representative appointed to act here, and having the charge and management of such business, it impliedly assents to be found and sued here in the person of such agent." In Clews v. Iron Co., 44 Fed. 31, the president of an Alabama corporation, who resided there, was in New York City for the purpose of negotiating its bonds, and it was held that service upon him in New York was invalid in a suit against the corporation, as by this transaction the defendant could not be held to be engaged in business in the state. "The only business which it did," said the court, "was the borrowing of money upon its bonds and mortgage, and the obtaining from the stock exchange of the privilege of having such bonds called on the list of securities dealt in on its floor. It could apparently have secured this privilege, and could have sold its bonds, by correspondence. It kept no office here. It did not continuously, or even for a period of some duration, carry on here the business which it was organized to carry on, and by the regular transaction of which it gave evidence of its continued existence." So, in Good Hope Co. v. Railway Barb Fencing Co., 22 Fed. 635, where service was made on the president of the defendant foreign corporation, which had no office or place of business within the state, and was not engaged in business there except occasionally, to purchase goods by an agent sent there for that purpose, the service was vacated, although, when made, the president was in the state to adjust a controversy with the plaintiff growing out of such a purchase; the decision being based on the ground that "the corporation had never been practically engaged in business here. It had made purchases here occasionally, but it could have made them by correspondence as well as by the presence of its agents here. If the purchases had been made by correspondence, it could be as logically urged that the corporation was engaged in doing business here as it can be now." And on the same principle, under similar facts, was the like decision in St. Louis Wire-Mill Co. v. Consolidated Barb-Wire Co., 32 Fed. 802. Judge Brewer held, in Carpenter v. Air-Brake Co., Id. 434, that valid service could not be had upon the foreign defendant corporation by service upon its officers and agents who were running a train of cars in Iowa for the purpose of exhibiting its air brake, the train not carrying freight or passengers for hire; Love and Shiras, JJ., concurring in the decision.

The question was also considered at length in Henning v. Insurance Co., 28 Fed. 440, which was a suit on a judgment obtained in Illinois against the defendant upon service on an agent of the company there, which was a Tennessee corporation, whose home office was in Memphis. It had no office in Illinois, and no agent there, as required by the law of that state. The insurance was effected through a broker in Chicago, the business all being done by mail. The policies were executed in Tennessee, and sent to and delivered at Chicago. The agent served was the broker, and the property insured was in Minnesota, but the residence or citizenship of the plaintiff was not shown. The defendant's objection to the introduction of the record was sustained because it did not show that the defendant was doing business in Illinois. And see Hazeltine v. Insurance Co., 55 Fed. 743, where the above cases are reviewed, and it is held that a foreign insurance company which effects insurance in a state by correspondence from its home office, and which has no office or agent in the state, does not thereby carry on business in the state, within the meaning of the state statute providing for service of process on agents of foreign corporations.

Digitized by Google

SAME—PLACE OF CONTRACT OR TRANSACTION.

36. When foreign corporations are prohibited from doing business in a state without complying with certain conditions, and a foreign corporation that has not complied with the law enters into a contract with a person residing in that state, this alone does not affect the validity of the contract, or show a violation of the law, for the contract, though made with a citizen of the state residing there at the time, may not have been made in the state, but may have been made in the state of the corporation's domicile. In such a case it cannot be affected by the law of the state in which the party resides, but its validity is governed by the lex loci contractus. It is not competent for the legislature of one state to prohibit its citizens from making contracts with foreign corporations, if the contracts are not made in the state; and the statutes are not to be construed as intended to have this effect. See Lamb v. Bowser, Fed. Cas. Nos. 8,008, 8,009; Reed v. Walker, 2 Tex. Civ. App. 92, 21 S. W. 687. But it may prohibit its citizens from making contracts within its limits with foreign corporations. See State v. Williams, 46 La. Ann. 922, 15 South. 290; Moses v. State, 65 Miss. 56, 3 South. 140.

It is not always easy to determine in what place a contract is made. The question has often arisen in the case of contracts of insurance by a foreign insurance company made through an agent in the state. If the contract is not made by the agent, but by the corporation, the agent merely acting as the medium of negotiation, and it takes effect and becomes binding at the home office of the company, it is not made in the state, and is not subject to its laws.

37. In Hyde v. Goodnow, 3 N. Y. 266, it appeared that a New York insurance company had an agent, residing in the state of Ohio, authorized to receive applications for insurance. The agent received from a party, also residing in Ohio, an application, together with a premium note, and transmitted them to the office of the company in New York, where they were received, passed upon, and approved, and where a policy was executed and transmitted to the applicant by mail. The agent had no authority to make contracts of insurance, but only to receive and forward applications. It was held that the contract of insurance in this case was made in New York at the office of the company, and not in the state of Ohio, and, therefore, that the contract was not within the prohibition of the Ohio statute declaring that no policy should be signed, issued, or delivered in that state by a foreign company, except by an agent who should first obtain a license in the manner prescribed in the act. In this case it was said: "The applications of the defendant for insurance could in no sense have been regarded as a contract until they had been accepted by the company. The agent did not assume to do anything which would bind the company. His office was to receive and submit to the company the defendant's propositions. Until the company acted upon such propositions, it was within the defendant's power at any time to recall them. Before the company had agreed to insure, the defendant, notwithstanding the execution and delivery of the notes and applications to the agent of the company, might have withdrawn his applications, and upon his doing so his notes would have been inoperative. Until then the transactions were wanting in that mutuality which is essential to a valid contract. But when the company, having received the applications, accompanied with the notes, consented to insure, and issued its policies, what was before revocable became irrevocable. What was before a mere proposition, then became invested with the attributes of a contract, and from that time each party became bound for its performance. If this be so, the contracts are to be regarded as having been made when the company received and accepted the defendant's applications, and issued and transmitted to him their policies." And see, to the same effect, Western v. Insurance Co., 12 N. Y. 258; Lamb v. Bowser, Fed. Cas. Nos. 8,008, 8,009; Marine Ins. Co. v. St. Louis, I. M. & S. Ry. Co., 41 Fed. 643; State Mut. Fire Ins. Ass'n v. Brinkley Stave & Heading Co., 61 Ark. 1, 31 S. W. 157.

Clearly, when a corporation of one state, as an insurance company, enters into a contract with a citizen of another state by correspondence through the mails, and has no office or agent in the other state, it does not thereby do business in the other state, for the contract is made in the state of its domicile. See Hazeltine v. Insurance Co., 55 Fed. 743.

38. There are some cases opposed to this view. In Wall v. Assurance Soc., 32 Fed. 273, a policy of insurance was issued by a New York company to a

Digitized by Google

citizen of Missouri upon an application made in Missouri and forwarded to the company in New York. The application was accepted by the company in New York, the policy was drawn and signed there, and it was forwarded to Missouri to be delivered to the assured there. By the terms of the policy the premiums were to be paid to the company in New York and not in Missouri, and the sum insured, when due, was to be payable to the assured in New York. It was held, in effect, that this contract was made in Missouri. This case cannot be sustained, unless there were facts not appearing in the report, and it is not supported by the cases cited in the opinion. They fall, rather, within the principle of Insurance Co. v. Elliott, 5 Fed. 225, infra.

39. If the contract does not take effect and become binding until some act is done in the state, the principle of the above case cannot apply. It is then made in the state. In Insurance Co. v. Elliott, 5 Fed. 225, a policy of life insurance was issued from the home office of a Wisconsin corporation upon the life of a person in Oregon, and forwarded to the local agent there for delivery. It contained a clause to the effect that it should not be binding upon the company until countersigned and delivered in Oregon, and the premium paid. It was held that the contract was completed in Oregon, and was void because the company was prohibited from doing business there. And see White v. Insurance Co., Fed. Cas. No. 17,545; Fletcher v. Insurance Co., 13 Fed. 526. In Re Insurance Co. of Pennsylvania, 22 Fed. 109, the agents of an insurance company in Buffalo, N. Y., at the request of an agent in Canada, insured a Canadian vessel. The note given for the premium was dated and signed in Canada, and made payable at a Canadian bank, and the policy, containing the receipt for the premium note, was delivered to the assured in Canada. It was held that the contract was made in Canada. In Insurance Co. v. Sawyer, 160 Mass. 413, 36 N. E. 59, it was held that where an application for insurance and the premium note were taken in Massachusetts by the agent of a foreign insurance company, and by him sent to the home office in Iowa, where they were accepted and the policy issued, the policy, however, being delivered by the agent in Massachusetts, the business of effecting the insurance was done in Massachusetts.

40. This principle applies, also, to sales of goods. The procuring in the state of orders for goods by the traveling agents of a foreign corporation, which orders are to be transmitted to the home office of the corporation for approval, after which the goods are to be shipped from such office to the buyer, does not constitute the making of a contract or the doing of business in the state; and the corporation may maintain an action on a note given for such goods. Varnish Co. v. Connell, 10 Misc. Rep. 553, 32 N. Y. Supp. 492; Manufacturing Co. v. Connell, 88 Hun, 254, 34 N. Y. Supp. 717; Lumber Co. v. Holbert, 5 App. Div. 559, 39 N. Y. Supp. 432; Manufacturing Co. v. Gorten, 93 Tenn. 590, 27 S. W. 971. Such a transaction is interstate commerce, and within the protection of the commerce clause of the federal constitution. Ante, § 29.

In Hart v. Machine Co., 72 Miss. 809, 17 South. 769, it was held that a foreign corporation in Tennessee, dealing with citizens of other states in reference to property not situated in Tennessee, was not engaged in business in such state, within the meaning of its statute, forbidding a foreign corporation to do business in Tennessee without complying with certain provisions, even though the parties met in that state, and there drew the contract relative to such business. And see Manufacturing Co. v. Gorten, 93 Tenn. 590, 27 S. W. 971.

41. The principle also applies to loans and similar transactions. In Scruggs v. Mortgage Co., 54 Ark. 566, 16 S. W. 563, it was held that an Arkansas statute providing that a foreign corporation should do no business in the state, except while maintaining a known place of business in the state, and an authorized agent for service of process, did not apply to a loan made by such a corporation on land in the state, where the agreement for the loan was made in another state, and the securities were delivered and the money paid therein. And see, to the same effect, Reeves v. Harper, 43 La. Ann. 516, 9 South. 104. And in Bamberger v. Schoolfield, 160 U. S. 149, 16 Sup. Ct. 225, it was held that the sending of a note by a resident of Alabama to Tennessee for discount, and its discount in the latter state by a Tennessee corporation, was not a carrying on of business by such corporation in Alabama, and the transaction was in Tennessee.

Digitized by Google

EFFECT OF FAILURE TO COMPLY WITH CONDITIONS.

42. There is a difference of opinion as to the effect of a foreign corporation's failure to comply with conditions imposed by the laws of a state upon the validity of contracts and transactions in the state. The statute may in express terms declare that contracts entered into by a foreign corporation before compliance with the conditions imposed shall be void. In such a case, of course, there can be no question as to the validity of the contract. It is absolutely void for all purposes. The difficulty arises when the statute merely prohibits foreign corporations from doing business in the state until they have complied with the conditions imposed, and imposes a pecuniary penalty upon the corporation or its officers for violation of the prohibition, or imposes no penalty at all. The duty of the courts in such cases is obviously to ascertain the intention of the legislature.

SAME—WHERE A PENALTY IS IMPOSED.

43. It would seem clear that, when the constitution or statutes of a state prohibit foreign corporations from doing any business or making any contracts in the state without having a known place of business and an authorized agent therein, the prohibition is for the purpose of protecting the citizens of the state, and the intention is to prohibit absolutely just what it purports to prohibit. And on the clearest principles of the law of contracts, a contract in violation of the prohibition is illegal and void, to such an extent, at least, that no action can be maintained upon it by the corporation. And it is none the less void because the statute imposes a pecuniary penalty upon foreign corporations and their agents who shall be guilty of its violation. This is the view taken by a large number of the courts, and it is sound in reason and on principle.

The question was thoroughly considered by the supreme court of Alabama in Dudley v. Collier, 87 Ala. 431, 6 South. 304. The Alabama constitution declared that no foreign corporation should do any business in the state without having at least one place of business and an authorized agent therein. Const. art. 14, § 4. A statute, to give force and effect to this declaration, required every foreign corporation, before engaging in business in the state, to file an instrument designating a place of business and an authorized agent residing thereat, and declared that it should not be lawful to act as agent or transact any business on behalf of such a corporation until compliance with the requirement. For doing so without such compliance pecuniary penalties were prescribed. In the case referred to a person sued to recover compensation for procuring a loan. The defendant pleaded that the plaintiff was the agent of a foreign corporation which had not complied with the law so as to be authorized to lend money in the state, and it was held that this was a complete defense, as the contract of loan was illegal and void, and the services sued for were for doing a prohibited and illegal act. The reasoning of the court was as follows:

"It is an established rule of law, supported by uniform authority, that, when a statute goes no further even than to impose a penalty for the doing of an act, a contract founded on such act as a consideration is void, although the statute does not pronounce it void, nor expressly prohibit it. Woods v. Armstrong, 54 Ala. 150, 25 Am. Rep. 671, and note, 675-678. In the present case there is both a penalty and express prohibition. In Woods v. Armstrong, supra, it was accordingly held, where a statute of this state imposed a penalty for selling any fertilizer which had not been inspected, analyzed, and stamped in the mode prescribed by law, a note given for the purchase money of such fertilizer sold in violation of this requirement was void. This ruling has been followed by us in many other cases. In Milton v. Haden, 32 Ala. 30, a note given for the lease of a ferry was held void on the ground that the lessor had no license, and the running of an unlicensed ferry was prohibited under a penalty. In Harrison v. Jones, 80 Ala. 412, we held that no recovery could be had for medical services rendered by an unlicensed physician, the practice of medicine in this state, without such license, being impliedly prohibited by a penalty. This ruling rests upon the general principle that when a statute forbids, under a penalty or otherwise, the carrying on of any particular business without a license, a contract made for services rendered or goods sold in violation of the requirements of such statute is void, especially if it appears that the object of the legislature was for police purposes, and not solely for the purpose of raising revenue; or, in other words, where the legislative intent, in imposing the condition, was 'the maintenance of public order or safety, or the protection of the persons dealing with those on whom the condition is imposed.' Such, at least, seems to be the better and later view sustained by the more recent authorities. 3 Am. & Eng. Enc. Law, 872; Bish. Cont. § 547; Greenh. Pub. Pol. 580-583. Mr. Wharton states the rule as follows: 'When a statute imposes a penalty, not as a tax, but as a punishment, then a contract to do the thing on which the penalty is imposed is ordinarily unlawful; and so, when an act is absolutely prohibited. And when conditions on the exercise of a business are imposed in a statute for the maintenance of public order, or for the protection of parties, or on grounds of public policy, then

Digitized by Google

contracts by such persons, in violation of the statute, are void.' 1 Whart. Cont. § 365; Melchoir v. McCarty, 11 Am. Rep. 605; Robertson v. Hayes, 83 Ala. 290, 3 South. 674; Prescott v. Battersby, 119 Mass. 285; Buxton v. Hamblen, 32 Me. 448."

This decision was followed by the same court in Farrior v. Security Co., 88 Ala. 275, 7 South. 200, and it was held that a loan made and mortgage taken by a foreign corporation in Alabama, without having complied with the statute, was illegal and void, and that a bill to foreclose the mortgage could not be maintained. And see Investment Co. v. Nixon, 95 Ala. 318, 10 South. 311.

44. The decisions of the supreme court of Pennsylvania are to the same effect. In Thorne v. Insurance Co., 80 Pa. St. 15, an insurance company of another state brought suit against its agent in Pennsylvania and the sureties on his bond to recover for money collected by the agent in the course of his agency and not accounted for. It was held that the suit could not be maintained because the company had not complied with the Pennsylvania statute relating to foreign insurance companies. The statute in question required foreign insurance companies desiring to transact business in the state to file a written appointment of an agent in the state, and to obtain a license, and made it a misdemeanor, subject to a fine, for an agent to transact business without compliance with the statute. The principle on which the decision was based was that the doing of the business by the agent was expressly prohibited by the statute, and was authorized by the company, and that no recovery could be had on the bond without proving that the company and the agent had both violated the law. And see, to the same effect, Johnson v. Hulings, 103 Pa. St. 498; Lasher v. Stimson, 145 Pa. St. 30, 23 Atl. 552; Buxton v. Hamblen, 32 Me. 448; Lumber Co. v. Thomas, 92 Tenn. 587, 22 S. W. 743; Manufacturing Co. v. Wetzel (Tenn. Ch. App.) 35 S. W. 896; Cumberland Land Co. v. Canter Lumber Co., Id. 886; Barbor v. Boehm, 21 Neb. 450, 32 N. W. 221.

45. Some of the courts have not taken this view, but, on the contrary, have held that where the statute not only prohibits doing business before compliance with the conditions imposed, but also imposes a penalty for its violation, the legislature, by annexing a specific penalty, manifests an intention that the penalty shall be exclusive, and that noncompliance with the statute shall not render contracts void. In some of the cases, however, in which this view was taken, the statute did not expressly prohibit foreign corporations from doing business before compliance with the conditions, but merely imposed the conditions, and imposed a penalty for noncompliance. See Lumber Co. v. Thomas, 33 W. Va. 566, 11 S. E. 37; State Mut. Fire Ins. Ass'n v. Brinkley Stave & Heading Co., 61 Ark. 1, 31 S. W. 157; Insurance Co. v. Walsh, 18 Mo. 229; Insurance Co. v. Whipple, 61 N. H. 61; Insurance Co. v. Way, 62 N. H. 622; Insurance Co. v. McMillen, 24 Ohio St. 67; Foundry Co. v. Augustine, 5 Wash. 67, 31 Pac. 327; Edison General Electric Co. v. Canadian Pac. Nav. Co., 8 Wash. 370, 36 Pac. 260; Agricultural Co. v. Strand, 8 Wash. 647, 36 Pac. 682; La France Fire-Engine Co. v. Town of Mt. Vernon, 9 Wash. 142, 37 Pac. 287, and 38 Pac. 80; Loan Ass'n v. Rainbolt, 48 Neb. 434, 67 N. W. 493, 498; Kindel v. Lithographing Co., 19 Colo. 310, 35 Pac. 538; Fairbanks v. Macleod (Colo. App.) 45 Pac. 282; Union Trust Co. of New York v. Atchison, T. & S. F. R. Co. (N. M.) 43 Pac. 701. Compare Harris v. Runnels, 12 How. 79; Insurance Co. v. Matthews, 102 Mass. 225; Fritts v. Palmer, 132 U. S. 282, 10 Sup. Ct. 93; American Loan & Trust Co. v. East & West R. Co., 57 Fed. 242.

SAME—PENALTY IMPOSED FOR REVENUE PURPOSES ONLY.

46. If the statute does not in terms prohibit foreign corporations from doing business, and the penalty is imposed as a tax, for the purpose of revenue only, and not by way of punishment, it does not prohibit contracts before compliance with its terms. See Larned v. Andrews, 106 Mass. 435.

SAME—WHERE NO PENALTY IS IMPOSED.

47. By the great weight of authority, where a statute prohibits foreign corporations from doing business in the state without compliance with conditions, and does not attach any pecuniary penalty, all contracts entered into without such compliance are illegal and void. As no other penalty is attached, this is the only effective way of enforcing the prohibition. See Assurance Co. v. Rosenthal, 55 Ill. 85. In this case it was said: "When the legislature prohibits an act, or declares that it shall be unlawful to perform it, every rule of interpretation must say that the legislature intended to interpose its power

Digitized by Google

to prevent the act, and, as one of the means of prevention, that the courts shall hold it void. This is as manifest as if the statute had declared that it should be void. To hold otherwise would be to give to the person or corporation or individual the same rights in enforcing prohibited contracts as the good citizen who respects and conforms to the law. To permit such contracts to be enforced, if not offering a premium to violate a law, certainly withdraws a large portion of the fear that deters men from defying the law. To do so places the person who violates the law on an equal footing with those who strictly observe its requirements." See, also, to the same effect, Insurance Co. v. Slaughter, 20 Ind. 520; Hoffman v. Banks, 41 Ind. 1; Insurance Co. v. Thomas, 46 Ind. 44; Insurance Co. v. Harrah, 47 Ind. 236; Jones v. Smith, 3 Gray, 500; Insurance Co. v. Dawes, 6 Gray, 379; Williams v. Cheney, 3 Gray, 215; Insurance Co. v. Phillips, 13 Gray, 90; Insurance Co. v. Chamberlain, 16 Gray, 165; Insurance Co. v Hastings, 2 Allen, 398; Insurance Co. v. Sawyer, 160 Mass. 413, 36 N. E. 59: Insurance Co. v. Wright, 55 Vt. 526; Bank v. Page, 6 Or. 435; Insurance Co. v. Harvey, 11 Wis. 395; Neuchatel Asphalt Co. v. City of New York, 9 Misc. Rep. 376, 30 N. Y. Supp. 252; Barber v. Boehm, 21 Neb. 450, 32 N. W. 221; Seamans v. Zimmerman, 91 Iowa, 363, 59 N. W. 290; Insurance Co. v. Stoy, 41 Mich. 385, 1 N. W. 877; Seamans v. Temple Co., 105 Mich. 400, 63 N. W. 408. The federal courts have held to the same effect. In re Comstock, Fed. Cas. No. 3,078; Semple v. Bank, Id. 12,659; Lamb v. Lamb, Id. 8,018; Insurance Co. v. Elliott, 5 Fed. 225. The courts of North and South Dakota have refused to follow these cases, and hold that no one but the state can raise the question. Mill Co. v. Bartlett, 3 N. D. 138, 54 N. W. 544; Wright v. Lee, 4 S. D. 237, 55 N. W. 931; Manufacturing Co. v. Groves (S. D.) 62 N. W. 109.

SAME—WHERE STATUTE DECLARES THAT CONTRACTS SHALL BE VALID.

48. Of course, if, as is sometimes the case, a statute prohibiting foreign corporations from doing business expressly declares that these contracts shall be valid, the fact that they are carrying on business in violation of the prohibition cannot affect their right to sue on the contracts made in the course of such business. Insurance Co. v. Lapsley, 15 Gray, 262; Insurance Co. v. Pursell, 10 Allen, 231; Insurance Co. v. Matthews, 102 Mass. 221; Rogers v. Simmons, 155 Mass. 259, 29 N. E. 580. See Insurance Co. v. Sawyer, 160 Mass. 413, 36 N. E. 59.

SAME—WHERE BUSINESS IS NOT PROHIBITED.

49. The terms of the statute may show that the legislature did not intend to prohibit corporations from doing business after failure to comply with the law. Thus, where a statute merely requires foreign corporations to file a copy of their charter, or observe other requirements, within a certain time after commencing business in the state, and imposes a penalty for failure to do so, the statute is not to be construed as prohibiting continuance of business after a violation of the law, so as to avoid their contracts, but the only penalty incurred is the penalty imposed by the statute. Insurance Co. v. Overholt, Fed. Cas. No. 10,338; Kindel v. Lithographing Co., 19 Colo. 310, 35 Pac. 538; Slauson v. Schwabacher, 4 Wash. 783, 31 Pac. 329; Agricultural Co. v. Strand, 8 Wash. 647, 36 Pac. 682; Chase's Patent Elevator Co. v. Boston Tow-Boat Co., 152 Mass. 428, 28 N. E. 300; Rogers v. Simmons, 155 Mass. 259, 29 N. E. 580.

In Crefeld Mills v. Goddard, 69 Fed. 141 (affirmed 21 C. C. A. 530, 75 Fed. 818), a statute of New York provided that no foreign stock corporation should do business in New York without having first procured from the secretary of state a certificate of its compliance with all the requirements of law to authorize it to do business in the state, and that no such corporation then doing business in the state should do business therein after December 31, 1892, without having procured such certificate, but that any lawful contract previously made by the corporation might be performed and enforced within the state subsequent to such date. It further provided that no foreign stock corporation doing business in the state, without such certificate, should maintain any action in the state upon any contract made by it in the state until it should procure such certificate. It was held that the effect of such statute was not to invalidate contracts made in the state by foreign corporations doing business there without a certificate after December 31, 1892, but only to suspend the remedy thereon until such certificate should be procured.

Digitized by Google

SAME—RIGHT OF CORPORATION TO SET UP NONCOMPLIANCE WITH THE LAW.

50. It would seem contrary to the spirit and purpose of statutes imposing conditions upon foreign insurance companies and other corporations, for the protection of citizens of the state, to hold contracts made by such corporations without compliance with the statutes void, so as to prevent their enforcement by the other party against the corporation. Thus, if a foreign insurance company comes into a state and issues policies to its citizens without having complied with the law, so as to acquire the right to do business in the state, the company ought not to be allowed to set up its own wrong to defeat an action against it on the policy. The legislature cannot intend that citizens of the state shall, before dealing with a foreign corporation, inquire whether it has complied with all the requirements of the law. See Ehrman v. Insurance Co., 1 Fed. 471. In this case it was held that a foreign insurance company could not defeat an action on a policy issued by it on the ground that it had not complied with the law, and was not authorized to do business in the state. The court said: "The objects sought to be obtained by the statute are security and protection to policy holders, and revenue to the state, but chiefly the former. By failing to comply with the requirements of the act the companies, and their agents and brokers, render themselves liable to the penalties denounced by the act, but such failure does not affect the validity of the policies issued by them, or in any manner operate to the prejudice of the policy-holders." This decision must be limited by the facts actually before the court. It cannot be taken as authority for holding that the company could enforce contracts made by it without compliance with the law. And it is not to be presumed that the court intended to so hold. Nothing further is held than that a foreign insurance company cannot defeat an action on its policy by setting up its noncompliance with the law.

This rule seems to be well established. Some of the courts base it on the ground of estoppel. In Berry v. Indemnity Co., 46 Fed. 439, a foreign life insurance company sought to defeat an action on a policy on the ground that, because of failure to comply with the law, it was not authorized to do business in the state, or to issue the policy. Judge Caldwell, in overruling this defense, said: "By the fact of doing business in the state, it asserted a compliance with the laws of the state, and, after enjoying all the benefits of that business and receiving the money of the assured, it will not be heard to say that it never submitted to the jurisdiction of the state. It can reap no advantage from its own wrong." Not only is the corporation thus estopped, but the estoppel also extends to agents and members of the corporation who participate in unauthorized transactions. Kilgore v. Smith, 122 Pa. St. 48, 15 Atl. 698.

51. Another ground upon which foreign corporations can be held liable on contracts entered into without having complied with the conditions imposed by law is that the laws are intended for the protection of persons dealing with the corporation, and that the legislature did not intend to avoid its contracts to their prejudice. This was the view of Judge Caldwell in Ehrman v. Insurance Co., supra. See, also, Insurance Co. v. McMillen, 24 Ohio St. 67; The Manistee, Fed. Cas. No. 9,027; Pennypacker v. Insurance Co., 80 Iowa, 56, 45 N. W. 408; Marshall v. Insurance Co., 78 Hun, 83, 29 N. Y. Supp. 334, .

SAME—ESTOPPEL OF OTHER PARTY TO CONTRACT.

52. Some of the courts have held that a party who enters into a contract with a foreign corporation which has not complied with the law and was not authorized to do business is estopped to deny the validity of the contract. See Wright v. Lee, 2 S. D. 596, 51 N. W. 706; Mill Co. v. Bartlett, 3 N. D. 138, 54 N. W. 544; American Loan & Trust Co. v. East & West R. Co., 37 Fed. 242; La France Fire-Engine Co. v. Town of Mt. Vernon, 9 Wash. 142, 37 Pac. 287, and 38 Pac. 80; Rathbone v. Frost, 9 Wash. 162, 37 Pac. 298. As we have seen, however, the overwhelming weight of authority is to the contrary. See the cases cited in section 42, et seq., supra.

SAME—CONTRACTS AND TRANSACTIONS NOT CONNECTED WITH ILLEGAL BUSINESS.

53. In any case, to render a contract by a foreign corporation invalid on the ground that it is engaged in business in the state in violation of the laws of the state, the contract must be connected with the illegal business. In Bard v. Poole, 12 N. Y. 495, it was held that it is no defense, to an action on a legal and authorized contract by a foreign corporation through its officers residing in New York, that such corporation, by the same agents and at the

Digitized by Google

same office, carried on a business in violation of the restraining laws of the state, if the particular contract has no connection with the illegal business. In this case a Maryland corporation, through its officers in New York, made a loan on mortgage security, which it was perfectly lawful for it to do, and the contract was sustained notwithstanding the corporation, through the same officers and at the same office by whom and at which the loan was made, was engaged in doing a banking business, which was prohibited and illegal; the loan not being connected with such business. And see White River Lumber Co. v. Southwestern Imp. Ass'n, 55 Ark. 625, 18 S. W. 1055; Typefounders' Co. v. Conner, 6 Misc. Rep. 391, 26 N. Y. Supp. 742. And see Brewing Co. v. Levisy (Tenn. Ch. App.) 37 S. W. 889. In this case a bill was brought by a corporation on drafts accepted by the defendant, and the latter filed a plea in abatement, alleging that the complainant was a foreign corporation, having an office and domicile in the state, and that it had not, at the time the cause of action accrued, registered its charter, as required by statute in order to entitle it to maintain suit. The plea was held insufficient because it did not allege that the cause of action arose out of transactions with the office or agency domiciled in the state. "The fact," it was said, "that a foreign corporation has an office or agency within the state, and is carrying on a business in connection therewith, does not prevent its conducting other transactions of a similar kind, independent of such office or agency."

In Phenix Ins. Co. v. Pennsylvania R. Co., 134 Ind. 215, 33 N. E. 970, it was held that, though a foreign insurance corporation had failed to comply with the statute requiring the performance of certain duties before transacting any business in the state of Indiana, yet, where it had paid a loss on a policy issued to a citizen of that state, it was entitled to be subrogated to his rights as against a person whose negligence caused the loss, as the statutory provisions in relation to foreign corporations had no application to an action for damages by such company against the person causing the loss, since it was not seeking to enforce a contract, but was merely standing in the place of the insured, to enforce a duty the person causing the loss owed the insured.

In Powder River Cattle Co. v. Commissioners of Custer County, 9 Mont. 145, 22 Pac. 383, it was held that failure of a foreign corporation to comply with a statute providing that all foreign corporations, before doing any business within the territory, should file with the secretary thereof, and the recorder of the county wherein they might intend to transact business, a copy of their charter, and a statement, did not preclude it from suing to recover taxes paid under protest, and alleged to have been illegal, as such action was not based upon any act or contract of plaintiff in the conduct of its business.

SAME—NEGOTIABLE INSTRUMENTS.

54. Where the statute forbids foreign corporations to do business in the state without compliance with its provisions, but does not declare expressly that a contract made with a delinquent corporation shall be void, nor denounce as invalid any securities given by or to it under such contracts, a bona fide holder of a note or other negotiable security, who took the same before maturity and for value, will be protected, even in those jurisdictions in which it is held that unauthorized contracts are void, as the same rule applies in such cases as is applicable to negotiable instruments given in any other illegal transaction. Clark, Cont. 489; Hart v. Machine Co., 72 Miss. 809, 17 South. 709; City Bank of Hartford v. Press Co., 56 Fed. 260, affirmed Press Co. v. City Bank of Hartford, 7 C. C. A. 248, 58 Fed. 321.

SAME—COMPLIANCE WITH STATUTES AFTER MAKING OF CONTRACT OR BRINGING SUIT.

55. In Mechanics' Mill & Lumber Co. v. Denny Hotel Co. (Wash.) 32 Pac. 1073, under a statute requiring foreign corporations to file a copy of their articles of incorporation and a written appointment of an agent, it was held a sufficient compliance with the statute where a foreign corporation furnishing materials for the erection of a building within the state filed its articles and the written appointment of an agent before the commencement of a suit to foreclose its lien for the materials, though after the materials were furnished, and after the filing of the lien notice. So, in Missouri, in Carson-Rand Co. v. Stern, 129 Mo. 381, 31 S. W. 772, under a statute providing that no foreign cor-

Digitized by Google

poration which should fail to comply with its provisions could maintain a suit in any courts of the state, it was held that an action begun by a foreign corporation without first complying with the statute should not be dismissed on motion, where the statute was complied with before the motion to dismiss.

These decisions, it is to be noticed, were in states holding the doctrine that noncompliance by a foreign corporation with the conditions prescribed by statute does not render its contracts void. Ante, § 45. It would be held otherwise, no doubt, in those states where such contracts are held void. Ante, §§ 43, 44, 47.

SAME—EXECUTED CONTRACTS.

56. The statutes prohibiting foreign corporations from doing business in the state until compliance with conditions imposed does not affect contracts entered into in violation thereof after they have been fully executed. In Gamble v. Coldwell, 98 Ala. 577, 12 South. 424, a foreign corporation, without having complied with the Alabama statute, made a loan in the state, and, to secure the same, took a mortgage on land therein. After default, and a sale and conveyance of the land under the power of sale in the mortgage, the mortgagor, in ejectment by the purchaser, set up the fact that the corporation was not authorized to make the loan and take the mortgage. It was held that the defense was not available, as the contract evidenced by the mortgage had been fully executed by the sale and conveyance. See, to the same effect, Craddock v. Mortgage Co., 88 Ala. 281, 7 South. 196; Sherwood v. Alvis, 83 Ala. 115, 3 South. 307. And in Long v. Railway Co., 91 Ala. 519, 8 South. 706, it was held that one who has sold, received payment for, and conveyed land to a corporation cannot sue to rescind the deed on the ground that the corporation had no power to purchase the land.

On the same principle, in Russell v. Jones, 101 Ala. 261, 13 South. 145, it was held that where the defendant gave his note to the agent of a foreign insurance company, individually, for the renewal of premium notes previously given, and the agent advanced his own money to the company for the defendant, the contract between the defendant and the company was fully executed, and it was therefore no defense, in an action by the agent on the notes, that the company had not complied with the provisions of the law, so as to entitle it to do business in the state.

SAME—CONTRACTS WITH OTHERS THAN CITIZENS.

57. If the statute merely prohibits foreign corporations from doing any business in the state, or if it not only prohibits such business, but declares that all contracts in violation of the statute shall be void, it would seem that the statute must apply, not only to contracts made by a foreign corporation with citizens of the state, but to contracts made in the state with nonresidents, and with other foreign corporations. The statute, however, may show clearly, on its face, that it was only intended to protect citizens of the state, in which case it would be held to apply only to contracts with citizens. In St. Louis, A. & T. Ry. Co. v. Fire Ass'n, 60 Ark. 325, 30 S. W. 350, an Arkansas statute provided that if any foreign corporation should fail to file a certificate designating a resident agent and its principal place of business, all its contracts with citizens of the state should be void as to it. It was held that this statute did not affect contracts made in Arkansas between foreign corporations. See, also, Boyington v. Van Etten (Ark.) 35 S. W. 622.

SAME—CRIMES AGAINST NONCOMPLYING CORPORATIONS.

58. Even though a statute prohibits foreign corporations from doing business in the state without compliance with certain provisions, so that, without such compliance, they cannot make enforceable contracts in the state, yet one who has undertaken to make a contract of agency with such a corporation, and has acted as its agent, and received money for it, paid on unenforceable contracts, may be convicted of embezzling, as its agent, such money. People v. Hawkins (Mich.) 64 N. W. 736, and cases there collected. The same rule would apply to other crimes against foreign corporations illegally doing business in the state, as larceny, arson, burglary, etc.

PROHIBITION AGAINST ACQUIRING AND HOLDING LAND.

59. While a foreign corporation may acquire and hold real estate in the absence of express statutory prohibition, unless it is contrary to the general

Digitized by Google

policy of the state as shown by its legislation (see Hards v. Insurance Co., Fed. Cas. No. 6,055; Barcello v. Hapgood, 118 N. C. 712, 24 S. E. 124; Lancaster v. Improvement Co., 140 N. Y. 576, 35 N. E. 964; Smelting Co. v. Reinhard, 114 Mo. 218, 21 S. W. 488; Taylor v. Trust Co., 71 Miss. 694, 15 South. 121; Reorganized Church of Jesus Christ of Latter-Day Saints v. Church of Christ, 60 Fed. 937), the state has a perfect right to prohibit it from holding land, and in a number of states prohibitory laws have been enacted.

When a foreign corporation is prohibited from acquiring and holding land, it is sometimes expressly provided that land held in violation of the statute shall escheat to the state, upon a proper adjudication in quo warranto proceedings. See Com. v. New York, L. E. & W. R. Co., 114 Pa. St. 340, 7 Atl. 756.

Where there is an express provision for escheat to the state, it may well be considered that the legislature did not intend any other penalty, no other penalty being prescribed, and therefore did not intend that a conveyance of land to such a corporation should be void, and subject to attack by private individuals. And there are a number of cases, based upon such a statute, in which it has been held that such a conveyance is not void, but passes the title, and that the corporation may hold the land, subject only to the right of the state to enforce the forfeiture,—that no one but the state can question its capacity. Runyan v. Lessee of Coster, 14 Pet. 122; Com. v. New York, L. E. & W. R. Co., 132 Pa. St. 591, 19 Atl. 291; Hickory Farm Oil Co. v. Buffalo, N. Y. & P. R. Co., 32 Fed. 22.

These cases arose under Pennsylvania statutes expressly providing the penalty of escheat. They are not authority, therefore, under statutes prohibiting foreign corporations from acquiring and holding land, without prescribing such penalty. By the weight of authority, however, in such cases, also, the statute is not to be construed as rendering a conveyance to a foreign corporation void, or subject to collateral attack. A leading case on this point is Leazure v. Hillegas, 7 Serg. & R. 313, where it was held that a foreign corporation might purchase and take title to real estate, notwithstanding a statutory prohibition; the title, like that of an alien at common law, being defeasible at the pleasure of the commonwealth. The cases cited above also recognize this case as sound. See, also, Goundie v. Water Co., 7 Pa. St. 233; Barnes v. Suddard, 117 Ill. 237, 7 N. E. 477; Land Co. v. Bushnell, 11 Neb. 192, 8 N. W. 389; Carlow v. C. Aultman & Co., 28 Neb. 672, 44 N. W. 873; Hanlon v. Railway Co., 40 Neb. 52, 58 N. W. 590; Mortgage Co. v. Tennille, 87 Ga. 28, 13 S. E. 158; Fisk v. Patton, 7 Utah, 399, 27 Pac. 1. And see Improvement Co. v. Perkins (Tex. Civ. App.) 26 S. W. 256.

60. This question came before the supreme court of the United States in 1889, in Fritts v. Palmer, 132 U. S. 282, 10 Sup. Ct. 93. A statute of Colorado required foreign corporations, before doing business in the state, to file a certificate designating their principal place of business and an authorized agent or agents for service of process. It also provided: "And no foreign or domestic corporation established or maintained in any way for pecuniary profit of its stockholders or members shall purchase or hold real estate in this state, except as provided for in this act." The court assumed that this statute prohibited a foreign corporation from purchasing or holding real estate in Colorado, for the purposes of its business, until it had first complied with the requirements, so as to be entitled to do business in the state, and then held that failure to comply with the conditions entitling it to do business in the state did not render a conveyance of land to it void, so that it could be attacked collaterally by a private person. And see Seymour v. Gold Mines, 153 U. S. 523, 14 Sup. Ct. 847; Railroad Co. v. Evans, 14 C. C. A. 116, 66 Fed. 809.

MANDAMUS TO COMPEL ISSUANCE OF A LICENSE.

61. If the insurance commissioner, or other executive officer of the state, charged with the duty of granting licenses to foreign corporations on their compliance with the law, is invested with discretionary power, mandamus will not lie on the relation of a foreign corporation to compel him to issue a license, for it is an elementary principle that the writ of mandamus will not issue to control the exercise of judgment and discretion with which the legislature has invested an officer. See Insurance Co. v. Wilder, 40 Kan. 561, 20 Pac. 265; State v. Carey, 2 N. D. 36, 49 N. W. 164. It is otherwise if the officer has no discretion in the premises, but is bound to issue a license upon certain terms being complied with by the corporation. In such a case, if he

Digitized by Google

refuses to issue a license, when a corporation is entitled to it, mandamus will lie to compel him to issue it. Insurance Co. v. Wilder, 43 Kan. 731, 23 Pac. 1061; Isle Royale Land Corp. v. Secretary of State, 76 Mich. 162, 43 N. W. 14; State v. Root, 83 Wis. 667, 54 N. W. 33.

OUSTER IN QUO WARRANTO PROCEEDINGS.

62. If a foreign corporation undertakes to exercise its franchise and do business in a state without complying with the laws of the state, or when excluded altogether from doing business in the state, quo warranto will lie to oust it from the exercise of its franchise in the state. The proceedings cannot be defeated on the ground that a corporation can be ousted of its franchises only by the sovereignty which bestowed them, for the purpose of the proceeding is not to deprive the corporation of the franchises with which it has been invested by the laws of the state creating it, but to inquire into its authority to carry on its business in the state in which the proceeding is instituted, and, if it be found to be exercising its franchises in that state, in contravention of the laws thereof, to oust it therefrom. The proper judgment in such case is not to oust the corporation from the franchise of being a corporation, or from any of the franchises conferred upon it by the law of its creation,—for this is beyond the power of the state, and of its courts,—but to oust it from the exercise of its franchises in the state. This the state can do. State v. Western Union Mut. Life Ins. Co., 47 Ohio St. 167, 24 N. E. 392; State v. Insurance Co., 49 Ohio St. 440, 31 N. E. 658; State v. Ackerman, 51 Ohio St. 163, 37 N. E. 828; State v. Fidelity & Casualty Co., 77 Iowa, 648, 42 N. W. 509; State v. Fidelity & Casualty Ins. Co., 39 Minn. 538, 41 N. W. 108.

The issuing of a license to a foreign insurance company to do business in the state by the superintendent of insurance is a ministerial, and not a judicial, act, and is therefore not a bar to a proceeding in quo warranto, where the corporation is charged with exercising franchises and privileges without authority of law. State v. Insurance Co., 49 Ohio St. 440, 31 N. E. 658. And see State v. Fidelity & Casualty Co., 77 Iowa, 648, 42 N. W. 509; State v. Fidelity & Casualty Ins. Co., 39 Minn. 538, 41 N. W. 108. A certificate or license from the insurance commissioner, or other executive officer of the state, charged with the duty of issuing certificates and licenses, reciting that a corporation is entitled to do business in the state, raises a presumption that it has complied with the law, and is sufficient proof of such compliance, in the absence of evidence to rebut the presumption. Gutzeil v. Pennie, 95 Cal. 598, 30 Pac. 836.

Washington, D. C. WM. LAWRENCE CLARK, JR.

(78 Fed. 117.)

ROEMER v. PEDDIE et al.

(Circuit Court of Appeals, Third Circuit. January 6, 1897.)

PATENTS—LIMITATION OF CLAIMS—INFRINGEMENT—SATCHEL HANDLES.

The Roemer patent, No. 314,724, for an improvement in bag or satchel handles, consisting in a combination of a strap and metal plates, arranged on opposite sides thereof, with the edges of the strap projecting beyond the plates, and a covering secured to such edges, if valid at all, must be confined to the precise devices shown, and is not infringed by a handle having only one metal plate. 71 Fed. 407, affirmed.

Appeal from the Circuit Court of the United States for the District of New Jersey.

This was a suit in equity by William Roemer against T. B. Peddie & Co., for alleged infringement of a patent for an improvement in bag and satchel handles. The circuit court dismissed the bill, holding that the patent, if valid at all, must be so limited as to avoid

Digitized by Google

infringement. 71 Fed. 407. From this decree the complainant has appealed.

Wm. Roemer, in pro. per.
Louis C. Raegener, for appellees.

Before DALLAS, Circuit Judge, and BUTLER and WALES, District Judges.

WALES, District Judge. This suit was brought to restrain the alleged infringement of letters patent No. 314,724, issued to complainant, March 31, 1885, for a "bag or satchel handle." The claims of the patent are:

"(1) The improved handle, consisting, essentially, of a strap, metal plates, arranged on opposite sides thereof, to give strength to the handle, the edges of the said strap, a, projecting beyond said plates, and a covering secured to said edges, substantially as described.

"(2) In a bag handle, the oppositely concaved plates, b, c, having a projecting strap or piece there between, projecting to receive a covering, and said covering, said parts being arranged and combined substantially as set forth."

The defenses were noninfringement and want of patentable novelty. The bill of the complainant was dismissed by the circuit court on the ground that the defendants did not infringe the patent in suit, and the case is here on appeal.

Roemer states in his specification that his invention "consists in the arrangements and combinations of parts, substantially as will be hereinafter set forth, and finally embodied in the clauses of the claim." The record shows that no less than seven patents had been granted for bag or satchel handles prior to the date of Roemer's invention; and, as his claims are only for "the arrangements and combinations of parts," they must be limited to a strict construction. Confining the present inquiry solely to the question of infringement, a comparison of the Roemer handle with the alleged infringing article of the same kind which is used by the defendants will show the difference between them.

The Roemer construction consists of "a strap or centerpiece, preferably of leather, and b, c, are oppositely concaved strips of iron, or other suitable metal, between which the said centerpiece is clamped, the edges of the latter projecting beyond said plates, so that the outer or inclosing leather or pieces of the handle may be sewed or otherwise secured thereto." The defendants' handle is composed of an upper metal plate, and under this is a metal strap; but the latter does not correspond with Roemer's under plate, c, instead of which the defendants use a roll or filling of paper to give a rounded shape to the underside of the handle. Here there is observed the absence of one of the essential and indispensable elements of the Roemer combination.

It is insisted, however, that this roll of paper is the mechanical equivalent of Roemer's under plate, c. If this contention should be sustained, it would come dangerously near defeating the validity of the patent, in view of the fact that bag handles had already been made in which two rolls of paper were placed on opposite sides of the center leather strap. Roemer substitutes metal plates for both

Digitized by Google

rolls. The defendants substitute a metal plate for only one of the rolls. Roemer was not an original inventor, except in so far as he may have succeeded in forming a new combination of old parts. He had been preceded by numerous other inventors, who had devised handles for bags and trunks out of the same kind of materials which he uses, and having a similar shape and form. Letters patent issued to Charles F. Walker, No. 178,801, of January 25, 187–, show a handle with a metal wire or other suitable metal in the center of the handle, surrounded by leather or other material. The Lagowitz & Lieb patent, of 1876, describes a handle made of sheet metal struck up into U-shape, and the edges brought together into the form of a tube. Roemer makes use of two half tubes, clamping between them a leather strap.

From the history of the art it is evident that the defendants have only applied a paper roll to the underside of a metal plate in the same manner in which it had been done prior to Roemer, who now invokes the doctrine of mechanical equivalents to sustain the charge of infringement. This doctrine is well stated in Machine Co. v. Lancaster, 129 U. S. 263, 9 Sup. Ct. 299, and is reaffirmed in Miller v. Manufacturing Co., 151 U. S. 207, 14 Sup. Ct. 310. The range of equivalents depends upon the extent and nature of the invention. If the invention is broad or primary in its character, the range of equivalents will be correspondingly broad, under the liberal construction which the courts give to such inventions. Roemer was not a pioneer in the art, and, as was said by the learned judge of the circuit court, if his patent can stand at all, he must be confined to the precise devices mentioned in his claims; and, thus limited, the defendants do not infringe them.

The decree dismissing the complainant's bill is affirmed.

(78 Fed. 119.)

GREEN et al. v. AMERICAN SODA-FOUNTAIN CO.

(Circuit Court of Appeals, Third Circuit. January 18, 1897.)

No. 34, Sept. Term, 1896.

PATENTS—COMBINATIONS—SODA-WATER FOUNTAINS.

The Witting patent, No. 414,272, for improvements in dispensing apparatus for soda water, etc., compared with prior devices, especially the Adami and Lippincott apparatus, and *held* invalid as to the second claim, for want of invention and patentable combination. 75 Fed. 680, reversed.

Appeal from the Circuit Court of the United States for the Eastern District of Pennsylvania.

This was a suit in equity by the American Soda-Fountain Company against Robert M. Green and others, trading as Robert M. Green & Sons, for alleged infringement of a patent for a soda fountain. The cause was first heard on exceptions to certain paragraphs of the complaint. 69 Fed. 333. Thereafter the circuit court sustained the second claim of the patent in issue, and entered a decree in favor

Digitized by Google

of complainant. 75 Fed. 680. From this decree the defendants have appealed.

Strawbridge & Taylor and Frederick P. Fish, for appellants.
Joshua Pusey, for appellee.

Before DALLAS, Circuit Judge, and BUTLER and WALES, District Judges.

WALES, District Judge. This is a suit for the infringement of the second claim of letters patent No. 414,272, granted November 5, 1889, to Theodore L. Witting, for "improvements in dispensing apparatus for soda water," etc., and by him assigned to the American Soda-Fountain Company, the complainant below. The specification states that the "invention * * * consists in the novel construction, combination, and arrangement of parts hereinafter set forth, and pointed out in the claims." The principal defenses were: First, that the combination of the second claim of the patent, in view of the prior state of the art, did not involve invention; and, second, that the claim was for an unpatentable aggregation. On hearing on bill, answer, and proofs, the circuit court overruled both defenses, and entered a decree finding the defendants guilty of infringement, with the usual award for an injunction. The cause is now here on review.

The Witting patent is not for a primary invention, as will appear from the reading of the second claim, the validity of which is put at issue. The claim is as follows:

"(2) The combination of the outer case provided with a recess for containing glasses, drop doors hinged to said case above said recess and having journaled therein keys or handles for operating the syrup faucets, and laterally movable syrup cans and attached faucets located entirely within the case, for the purpose substantially as herein set forth."

The combination thus described is alleged to be unpatentable for the want of invention by the patentee in the adjustment of the different parts, and which, although, perhaps, it may be a convenient arrangement, called for nothing more than the exercise of mechanical skill in bringing together the well-known devices of prior inventors. The Witting apparatus belongs to that general class of soda fountains in which the syrup cans are horizontally inserted into that part of the casing which is below the ice chamber. Along the lower portion of the entire front of the casing extends a tumbler recess. Through the roof of this tumbler recess are a series of apertures corresponding in location to the faucets of the cans, one to each faucet, so that, when the faucet is opened, the syrup drops through the aperture into the tumbler beneath. The front of the casing is provided with a series of doors corresponding in number with the cans, hinged at the lower edges to the front edge of the roof of the tumbler recess, so that they may be dropped down to permit of the insertion and removal of the cans. In each of these doors is journaled the stem of an externally applied key or handle, the inner end of which stem, as the patent states, is "preferably bifurcated, or provided with a suitable slot, which engages the end, 12, of the plug, 1, readily allowing the door to be opened when required, the

Digitized by Google

slotted or forked end of the key being detached from the plug by the operation of opening the door." This entire arrangement is described in the specification as follows:

"The syrup faucets being located within the refrigerating chamber, it is obvious some provision must be made for operating them from without, which is done by journaling suitable handles or keys, P, in the doors, R, and connecting their inner ends to the thumb pieces or handles, 12, formed on outer end of plug, 1. This may be done in various ways, but I prefer to hinge the doors to the case, A, at their lower ends, by means of hinge, t, so that said doors may open downwardly and out, as shown in Fig. 1."

To understand how much of originality or of invention there may be in the combination of the Witting apparatus, reference will be had to a few of the patents (in defendants' exhibits) for similar structures, of a date prior to the patent in suit. The Mathews patent, No. 50,225, of October 3, 1865, shows the casing of a soda-water fountain which embodies a tumbler recess, and contains vertically disposed cans, the valve-controlled faucets or outlets of which register with openings in the roof of the tumbler recess, and the valve stems of which are operated by handles passing through a hinged door in the top of the casing. The Mathews patent, No. 179,584, of July 4, 1876, shows the casing of a soda fountain which contains separate series of both horizontally and vertically disposed cans. The Adami patent, No. 316,594, of April 28, 1885, shows a casing which is provided in its upper portion with an ice chamber, and in its central portion with a series of horizontal can chambers for syrup cans, within which a series of horizontally disposed cans may be introduced, and the front face of which is provided with a series of doors hinged along the upper edge of the can chambers, and adapted to close said chambers to permit the introduction and removal of the cans. The Lippincott patent, No. 375,452, of December 27, 1887, shows a soda-water apparatus, the casing of which has a tumbler recess, a series of vertically disposed can chambers in the front of the apparatus, orifices through the roof of the tumbler recess registering with the outlets of the faucets of the cans, and a series of vertically disposed removable cans having syrup faucets located entirely within the case, and each of them provided with a lug or blade adapted to be separately engaged with the bifurcated inner extremity of a stem journaled within the front of the casing, the outer extremity of which stem is provided with a key or handle, by the movement of which from the outside of the case the faucet within the case is wholly controlled.

By comparing the separate parts of the Witting fountain with the corresponding parts of the prior structures as described in the patents just referred to, it will be seen that Witting has not added a single new feature to those contained in one or the other of the old fountains, excepting, perhaps, the drop doors, "having journaled therein keys or handles for operating the syrup faucets." In fact, all that Witting appears to have done was to imitate both Adami and Lippincott, and thereby produce the same results by substantially the same means. Thus, there was no novelty in the insertion of syrup cans from the front of the casing, or in having the faucets

Digitized by Google

of the cases fitted to the apertures in the roof of the tumbler recess, or in journaling keys in the casing for the purpose of operating the faucets of the cans from the outside. Adami showed how horizontally disposed cans could be used with swinging doors hinged at their upper ends; and Lippincott, borrowing the tumbler recess from Mathews, demonstrated, for the first time, the application of a handle journaled through the case, on which was a claw which engaged with the blade of the faucet of the syrup can, by which he could manipulate the syrup from the outside of the case. In the specification of his patent, Lippincott says:

"The invention consists primarily in the combination, with a syrup jar having a cock in the neck thereof, of a shaft projecting beyond the outer casing of the fountain, and provided with a handle on its outer end for operating the key of said cock, the inner end of said shaft being constructed so that the jar, with the cock therein, may be readily removed from, and replaced within, the containing chamber (or another similar jar substituted therefor), without necessitating the breaking or disturbance of any joints or connections, yet, when the jar is in place, the cock therein will be in engagement with said shaft, and may be readily opened or closed by turning the handle on the end of the latter on the outside of the casing."

If this was all he did, it would not be contended that he was entitled to a patent; and this was the view taken by the patent office when Witting first formulated his claims. Having these two patents before his eyes, Witting applied the journaled key of Lippincott to the swinging door of Adami in the only way in which it could be done, and placed the cans and their faucets entirely within the casing, as Lippincott had done, and, finally, used the horizontally disposed cans of Adami, and by this adjustment of parts secured the result which had already been accomplished by Lippincott, viz. the discharge of the syrup into the tumbler beneath by "the adaption of the valve-operating handle shown by Lippincott to the swing door shown by Adami." It is true, there is a slight distinction between the united Adami and Lippincott inventions and the Witting patent, consisting in the fact that the Adami doors are hung from the top, while the Witting doors are hung from the bottom; and this appears, from the proceedings in the patent office, to have been the only ground on which the patent was granted. Witting's original application contained seven claims, which were finally reduced to two. The original fifth claim, as subsequently amended, is the present claim 2, now in suit, and read as follows:

"(5) The combination of the outer case provided with a recess for containing glasses, doors hinged to said case, and carrying keys or handles for operating the syrup faucets, and syrup cans and attached faucets located entirely within the case, for the purpose substantially as herein set forth."

This claim was rejected because—

"Deemed to involve no invention over what is shown in patents to Lippincott of record, and Adami, 316,594, April 28, 1885 (dispensing fountains). The claim seems to involve nothing more than the adaptation of the valve-operating handle shown by Lippincott to the swinging door shown by Adami."

Several amendments followed, until claim 5 was made to read as claim 2 now appears in the patent, thus (the italicized words show the amendments):

Digitized by Google

"The combination of the outer case provided with a recess for containing glasses, *drop* doors hinged to said case *above said recess* and *having journaled therein* keys or handles for operating the syrup faucets, and *laterally movable* syrup cans and attached faucets located entirely within the case, for the purpose substantially as herein set forth."

Leaving out the "drop doors," it appears that nothing new was added by Witting to the Adami-Lippincott structures. The patent office had, in the first place, decided that "Lippincott is deemed to show the full equivalent of claims 5 and 7," and again held, after claim 7 had been canceled, that claim 5 involved "nothing more than the adaptation of the valve-operating handle shown by Lippincott to the swinging door shown by Adami." It would seem, therefore, that the patent was granted to Witting only on the addition of the drop doors. It was evident to the patent office that the application of the Lippincott patent to the Adami patent did not amount to invention; and it was not until Witting, without making any other material amendment, limited his invention to drop doors, that his patent was granted. In avoidance of the reference to Adami, Witting states, "Adami's doors are hinged at the top; they cannot drop." If there is anything of which it can be possibly said that it has passed out of the domain of invention, it would seem to be the hinging of a door; that is, whether a door should be hinged at the top or bottom, at one side or the other, and made to open in any particular direction. The decision of such questions may be safely left to the judgment of a mechanic of ordinary skill and intelligence. It was a mere matter of mechanical choice with Witting to make a lift door or a drop door, and he preferred the latter. Lippincott journaled his key through the front casing in order to engage the stem of the handle with the valve of the faucet. Witting put in a door as Adami had done, and journaled the key in the door; and in making use of the Adami door he was compelled to adopt Lippincott's method of using the key. The patents of Adami and Lippincott are not public property, and, as Lippincott could not appropriate the former's invention by the application to it of his own, neither should Witting be permitted to combine them by a mere mechanical adjustment which it required no invention to make. For these reasons we are unable to concur with the circuit court in sustaining the second claim of the Witting patent. He has produced no new result, nor has he invented any novel and improved means of obtaining an old result. The whole object of his device is to discharge the syrup from the can faucet, through the aperture in the roof, into the tumbler directly beneath it, and he attains this end in almost precisely the same way and by the same means which are shown in the Lippincott drawings. We do not regard the cutting of a door in front of the casing as proof of invention, since Adami has already preceded him in doing the same thing, and certainly there can be no invention in converting a lift door into a drop door. In Hoffman v. Young, 2 Fed. 74, the claim in a combination patent was sustained on the ground that it presented evidence of invention, because a new result had been produced, though it was conceded the case was near

Digitized by Google

the border line of nonpatentability. In National Cash-Register Co. v. American Cash-Register Co., 3 C. C. A. 559, 53 Fed. 369, this court decided that the invention there in suit was a primary one, and that the result achieved by the inventor was absolutely and entirely new, and had not, by any means, been previously attained. In each of these cases, cited by counsel for the appellee, the production of a new result is made the test of patentability. On the other hand, numerous authorities may be found in which patents for combinations in machinery and in compositions have been held void for want of invention. We refer to a few only: Vinton v. Hamilton, 104 U. S. 485; Heald v. Rice, Id. 737; Heating Co. v. Burtis, 121 U. S. 286, 7 Sup. Ct. 1034. In Aron v. Railroad Co., 132 U. S. 84, 10 Sup. Ct. 24, a patentee had made use of devices of earlier patents. All that he did was to adapt them to the special purpose to which he contemplated their application, by making modifications which did not require invention, but only the exercise of ordinary mechanical skill. This was held insufficient to sustain his patent.

Having thus disposed of the first branch of the defense, it is unnecessary to discuss the question of aggregation, with which it is so closely connected. We are of the opinion that the decree of the circuit court, by which the second claim of the Witting patent was sustained, should be reversed, and the cause remanded with directions to dismiss the bill; and it is so ordered.

(78 Fed. 152.)

THE GLIDE.

HUDSON v. GRAFFLIN.

(Circuit Court of Appeals, Fourth Circuit. February 2, 1897.)

No. 181.

SHIPPING—DAMAGE TO CARGO—PERILS OF THE SEA—NEGLIGENCE.

Damage to a cargo of fertilizers, shipped on a barge from Baltimore to Norfolk, by sea water getting in through the hatches during a severe but not unusual storm, *held* to be attributable to negligent calking of the hatches and failure to cover them with tarpaulin battened down, as was customary with such cargoes, rather than to the "perils of the sea."[1]

Appeal from the District Court of the United States for the District of Maryland.

This was a libel in rem by William H. Grafflin, as administrator of George Grafflin, deceased, against the barge Glide (George P. Hudson, claimant), to recover for damage to cargo. The district court rendered a decree for the libelant, and the complainant has appealed.

Robert H. Smith, for appellant.

Frank Gosnell (T. M. Lanahan, on the brief), for appellee.

[1] As to what are "perils of the sea," within the meaning of contracts of affreightment and policies of marine insurance, see note to The Dunbritton, 19 C. C. A. 465.

Digitized by Google

Before GOFF and SIMONTON, Circuit Judges, and BRAWLEY, District Judge.

GOFF, Circuit Judge. The appellee filed the libel in this case in the district court for the district of Maryland against the barge Glide. The appellant intervened as managing owner and claimant. The libelant claimed damages because of injury to a cargo of fertilizers which he had shipped on the barge at Baltimore, to be transported to Norfolk. The Glide sailed from Baltimore during the night of the 20th of February, 1893, in tow of the Virginia Ehrman, and arrived at Norfolk on the 22d of that month, with a portion of her cargo damaged by sea water. The libelant insists that it was the duty of the barge to carry the cargo safely, except such loss as might be caused to it by the act of God and the public enemy, and he specially claims that the captain and owners of the Glide were guilty of negligence in not properly securing her hatches by calking them, and afterwards covering them with tarpaulins securely battened down. The court below decreed in favor of the libelant, from which decree this appeal is prosecuted.

The appellant claims that the district court erred in finding the Glide in fault, and her owners liable for damages to the cargo. He insists that the damage was caused by dangers of the seas, and that, therefore, the barge was exempt from liability. The owners of the Glide, in receiving the cargo, and receipting for the same, contracted for the safe custody, due transportation, and proper delivery of the 507 tons of fertilizers, belonging to the libelant. It was to have been so delivered at Norfolk in as good order and condition as when shipped. It is so well established and now universally admitted that the contract to transport implied that the barge was reasonably fit and suitable for the service which the owners engaged to perform, and that she was in condition to encounter such perils of the sea as a vessel of that kind, with a cargo of that character, laden in the way she was, may be fairly expected to encounter in a voyage from Baltimore to Norfolk, that argument is not required, nor is the citation of authorities necessary, to sustain the same.

We think the evidence clearly shows that the Glide, when she sailed from the port of Baltimore with the cargo of appellee on board, was seaworthy, and in every way fitted for the voyage to Norfolk, concerning which she was then under contract. That the cargo was damaged when it reached Norfolk is beyond question,—is, in fact, admitted. The only matter we have to determine is, was the damage caused by the vis major, or by the carelessness of the masters and owners of the barge. That the Glide, during her voyage, encountered a severe storm is clearly shown. The sea was heavy, the waves rolled over the barge, and the wind blew strong. The tug at the same time had in tow the barge Dixie, also laden with fertilizers, and her cargo was also damaged, but slightly, as compared with that of the Glide. The tug Peerless, with a tow of two barges and a bark, left the port of Baltimore very soon after the Virginia Ehrman left with the Glide, and encountered the same storm. Her mate describes the storm as very severe, and says

Digitized by Google

they let go of and anchored the bark, and took the barges into harbor, coming out, and proceeding to Norfolk the next morning. The cargoes of these two barges consisted also of fertilizers, and they reached the point of destination, Norfolk, without damage. The storm, though quite severe, was not unusual, and the fact that other barges and other tugs passed through it without damage indicates, at least, the absence of the elements necessary to constitute the interposition of the vis major, and suggests that, had there been more attention paid to the safety of the cargo and to the management of the barge, there would have been no necessity to subsequently rely upon the perils of the sea.

The damage to the cargo of the Glide was caused by the sea water entering at the hatches, and saturating the bags of fertilizers immediately thereunder. There were four regular hatches on the Glide, which appear to have been properly constructed, and well supplied with covers fitting flush with the top of the coamings. But we are forced to the conclusion, from the evidence, that they were not properly calked, and the testimony is uncontradicted that the barge used no hatch cloths or tarpaulins during any time of the voyage, not even when the sea was washing over the hatchways. The weight of the testimony shows that the custom at the port of Baltimore, especially with perishable cargoes, was for barges to calk the hatchways securely, put the tarpaulins on, and batten them down. The Glide had no tarpaulins previous to the voyage during which this cargo of fertilizers was damaged, but immediately thereafter she procured them. The hatches of the Dixie, the barge in tow with the Glide, as also those of the two barges in tow of the Peerless, were properly calked, tarpaulined, and battened down. No effort was made to calk the hatches of the Glide until after she left the port of Baltimore; and it is evident, to say the least, that the work was not well done, and, even then, if they had been securely tarpaulined, the damage would most likely have been obviated. While it is true that the damage was caused by the storm, yet it is also true that it could have been prevented by the exercise of reasonable skill and proper seamanship, and therefore the loss was not occasioned by the perils of the sea, and the carrier was not exempt from liability therefor. We cannot say, from the evidence found in the record, that the damage to the cargo of the Glide was produced from causes extraordinary in character and irresistible in force, that could not have been anticipated by human skill, and guarded against by proper exertion and prudent seamanship; and, consequently, it follows that we must find that the master and owners of said barge are liable to the appellee for the damages found by the court below. Bearse v. Ropes, 1 Spr. 331, Fed. Cas. No. 1,192; The Reeside, 2 Sumn. 567, Fed. Cas. No. 11,657; Story, Bailm. § 512a; The Chasca, 32 Law T. (N. S.) 838; The Svend, 1 Fed. 58; The Bark Kate Irving, 5 Fed. 633.

We concur fully with the learned judge who decided the case below, and the decree appealed from is affirmed.

Digitized by Google

(78 Fed. 183.)

THE NATCHEZ.

NEW ORLEANS NAV. CO., Limited, v. ST. LOUIS & N. O. ANCHOR LINE.

(Circuit Court of Appeals, Fifth Circuit. December 22, 1896.)

No. 475.

1. COLLISION—CREDIBILITY OF WITNESSES.
   In cases of conflict as to the movements of vessels, superior weight, other things being equal, is to be given to the testimony of witnesses as to the movements of their own vessel over that of witnesses on other moving vessels.
2. APPEAL—ASSIGNMENTS OF ERROR.
   An assignment that the court erred in allowing certain claims, which the evidence adduced by libelant did not substantiate, is too general to be considered.
3. SAME—REFUSAL OF NEW TRIAL.
   The refusal of a new trial is not assignable as error in the federal court.
4. INTEREST—DEMURRAGE.
   In cases of collision, where damages are given for detention, interest may be allowed thereon as part of such damage.

Appeal from the District Court of the United States for the Eastern District of Louisiana.

This was a libel in rem by the St. Louis & New Orleans Anchor Line against the steamboat Natchez (the New Orleans Navigation Company, Limited, claimant) to recover damages resulting from a collision. The district court rendered a decree for the libelant, from which the claimant has appealed.

M. Marks, for appellant.

W. W. Howe, W. B. Spence, and C. P. Cocke, for appellee.

Before PARDEE and McCORMICK, Circuit Judges, and MAXEY, District Judge.

PARDEE, Circuit Judge. This is a libel for damages in a case of collision between the steamboat Arkansas City and the steamboat Natchez. The district court adjudged the Natchez in fault, and awarded damages therefor, and the claimant of the steamboat Natchez has appealed. The claimant's answer to the libel gives the following account of the collision:

"On the 12th day of July, 1893, the steamboat Natchez left the port of New Orleans about 5 o'clock p. m., bound for the port of Vicksburg, having on board a cargo of merchandise. That the said steamboat was then, and continued to be during her voyage, in all respects seaworthy, and properly manned, equipped, and supplied. That the steamboat Arkansas City left the port of New Orleans about the same time, and both boats proceeded up the Mississippi river. That the Natchez made a landing, and, while at such landing, the Arkansas City passed her. That, after making such landing, the Natchez proceeded on her voyage, and kept gaining on the Arkansas City. That both boats, as is usual to avoid strong currents, crossed and recrossed the river, both boats being on the same side of the river, and crossing and recrossing the river at about the same time; the Natchez being in the rear of, and gaining on, the Arkansas City. That about 11 o'clock p. m. on the night of July 12, 1893, the steamboat Natchez having then passed, and being on the upper side or end of, the point known as 'College Point,' was laying and running parallel with the shore about seventy-five yards out in the river. That the steamboat Arkansas City was at that time

Digitized by Google

about seventy-five yards in advance of the Natchez, and more than one hundred yards to the larboard or left of the Natchez; so that there was ample room for the Natchez to keep on her course and pass the Arkansas City, as she had a right to do. That the pilot on watch on the steamboat Natchez blew one whistle, thus indicating to the pilot on watch on the Arkansas City that the Natchez would pass to the right or starboard side. That the pilot on watch on the Arkansas City, intending to prevent the Natchez from passing the Arkansas, did not respond to the signal given him, as he should have done, but changed the course of the Arkansas City to the starboard, and, after some time had elapsed, blew three short whistles, the signals of danger. That immediately thereafter the Natchez was stopped and backed, and never stopped backing until it was no longer necessary to back, but that her headway was such that it could not for some time be checked, and she continued for that time to move up the river; and the Arkansas City, having, as aforesaid, changed her course to the starboard, closed in on the Natchez, striking the Natchez at her forecastle chains, with the forward fender of the starboard water wheel of the Arkansas City, and breaking said fender. That thereupon the Arkansas City, working both wheels, went on and struck her bow in the bank."

Taking this statement to be true,—and the claimant is estopped from denying it,—there is no doubt that the Natchez (the overtaking steamboat) was in fault, unless, after the signal of the Natchez indicating her desire to pass to the starboard of the Arkansas City, the course of the Arkansas City was changed to the starboard, so as to prevent the Natchez from passing. On this point the evidence of the master and pilot of the Arkansas City is positive that no change of course was made on the part of the Arkansas City after the Natchez signaled to pass. On the other hand, the master and pilot and some other officials of the Natchez are positive that such change in the course of the Arkansas City was made. The trial judge evidently found the preponderance of evidence to be in favor of the Arkansas City, and we think properly, because, as is well settled in case of conflict of witnesses as to the disputed movement of vessels in collision, actual or threatening, superior weight (other things being even) is given to the testimony of a vessel's own men as to her movements over that of those witnesses on other moving vessels. McNally v. Meyer, Fed. Cas. No. 8,909; The Sam Sloan, 65 Fed. 125–127; and numerous cases there cited. In McNally v. Meyer, supra, Judge Blatchford (afterwards Mr. Justice Blatchford) well says:

"Daily experience in the trial of collision cases shows that nothing is more unreliable than testimony from those on one moving vessel as to the absolute actions on another moving vessel. The irresistible propensity is to regard your own vessel as stationary with reference to the other vessel, and to attribute all deflecting movement to the other vessel. The other vessel, a moving object, is alone in the eye. Unmoving objects are not kept in view as tests of movements in the vessels. The testimony which results is honest, but illusory, deceptive, and unreliable. The only safe reliance, as a general rule, as to the course and deflections of a vessel, is the testimony of those who hold in their hands her wheel or her tiller. A change of bearing between two vessels, which may be the result of three things,—a change of course wholly by one, a change of course wholly by the other, or a change of course by both,—can give no reliable indication to an observer on either vessel who judges merely from looking at the other vessel as to which one of the three things has produced such change of bearing."

This disposes of the first assignment of error.

The second assignment is that the court erred in allowing certain claims in the libel which evidence adduced by libelant did not

Digitized by Google

substantiate. The general character of this assignment relieves us of any necessity to consider it.

The third assignment is that the court below erred in refusing a new trial. This cannot be noticed.

The fourth assignment is that the court below erred in holding that the overtaking boat was running too close at the time she gave the signal to pass. We find no such ruling in the record, and none can be inferred, except, perhaps, from the general decree against claimant.

The fifth assignment of error is that the court "erred in allowing interest to libelant from the time of filing the libel on the judgment and decree rendered." It has been held by this court in Railroad Co. v. Schneider, 13 U. S. App. 655, 8 C. C. A. 571, and 60 Fed. 210, that a verdict assessing unliquidated damages, and allowing interest from judicial demand, is sufficiently specific where it appears clear such interest is allowed as part of the damages. The damages allowed in this case are, in the main, liquidated damages, to wit, specific sums of money actually paid for materials and repairs prior to the filing of the libel, and only one item in the account allowed can be classed as unliquidated, and that is for detention or demurrage of the steamboat Arkansas City for two days, the allowance of which is made the ground of the sixth and last assignment of error.

The claim in the libel is for three days' detention on the up-trip, $263 per day. This damage was specifically and sufficiently proved, and, from the view the district court evidently took of the case, was properly allowed, and interest thereon is in the nature of, and was intended as, damages. On the whole record, we find no reversible error, and therefore the decree of the district court is affirmed.

(78 Fed. 186.)

THE CITY OF CHESTER.

THOM et al. v. NORFOLK & C. R. CO.

(Circuit Court of Appeals, Fourth Circuit. February 2, 1897.)

No. 149.

1. COLLISION—IGNORING SIGNALS—EXCUSES.

It is no excuse for failure to answer a signal that the vessel for which it was intended heard it, but did not understand that it was for her, other vessels being in the vicinity. It is her duty to understand and heed such signals, especially when the vessel giving them is on converging courses with her, on her starboard bow, and has the right of way.

2. SAME—DUTY TO AVOID DANGER.

A vessel which fails to get an answer to her signals is not justified, though she have the right of way, in continuing onward until the danger point is reached. Her duty, especially in a crowded harbor, and when approaching a tug incumbered with a tow, is to take every care to avoid a course involving risk of collision.

3. SAME—TUG WITH STEAMER AND TOW—SIGNALS—MUTUAL FAULT.

A steamboat with a tow projecting in front was proceeding up Norfolk Harbor, near the Norfolk side, and was under engagement, by signal, with a

Digitized by Google

tug and tow coming down outside of her. Another tug, crossing from the Portsmouth side to reach a wharf, blew two signals of one blast each, which were heard by the steamboat, but not answered, because supposed to be for another vessel. The tug, nevertheless, continued her course, crossed in front of the descending tug, and struck the steamboat's tow. *Held*, that both steamboat and tug were in fault, the former for failing to understand and heed the signal, and the latter for proceeding after failing to get an answer.

Appeal from the District Court of the United States for the Eastern District of Virginia.

This was a libel in rem by the Norfolk & Carolina Railroad Company against the steamboat City of Chester (Alfred P. Thom, receiver of the Atlantic & Danville Railway Company, claimant), to recover damages resulting from a collision in Norfolk Harbor. The district court found that the City of Chester was alone in fault, and entered a decree for libelant. 68 Fed. 574. The claimant has appealed.

Richard Walke and Alfred P. Thom, for appellant.

Robert M. Hughes, of Sharp & Hughes, for appellee.

Before GOFF and SIMONTON, Circuit Judges, and MORRIS, District Judge.

SIMONTON, Circuit Judge. This case comes up by appeal from the district court of the United States for the Eastern district of Virginia, sitting in admiralty. It is a case of collision, occurring in the harbor of Norfolk, between the Pinner's Point, a steam tug of the Norfolk & Carolina Railroad Company, and the steam tug City of Chester. The collision took place at 8 a. m., on a clear and bright day. The City of Chester had in tow on her port side a large barge, loaded with railroad cars, which projected 40 feet beyond her bow. She was proceeding south, up the harbor. The Pinner's Point, without any tow, had left Trugien's Wharf, on the Portsmouth side of the harbor, and was making across the harbor, and across the course of the City of Chester, for the wharf of the Norfolk & Carolina Railroad Company, on the Norfolk side of the harbor. At the same time the steam tug Martha Helen was proceeding north, down the harbor, with two brigs in tow astern on a hawser, the tow being in all 400 feet long. The Pinner's Point had gone into the stream, and, when she was abreast of the Ferry Slip on the Norfolk side of the harbor, she straightened on her course for the Norfolk & Carolina Railroad wharf. To the north of this wharf are the wharves of the Bay Line steamers and of the Boston steamers. To the south of it are the wharves of the Compress Company, of the Norfolk & Southern Company, of Jones, of Lee, and of Campbell; and next to Campbell's wharf, south, is the Ferry Slip. The Pinner's Point was abreast of the Ferry Slip, and the Martha Helen had not quite reached it. The City of Chester was then abreast of the wharf of the Bay Line steamers. The distance between the Ferry Slip and the wharf of the Bay Line steamers is 2,250 feet, or 750 yards. So this was the distance between the City of Chester and the Martha Helen. The Pinner's Point was about the same distance from the City of Chester, and was four or five

Digitized by Google

points off her starboard bow. The Martha Helen approaching the City of Chester had signaled her with two whistles, indicating that she would put her helm to starboard. The City of Chester had replied with two whistles accepting the signal. After this, when the Pinner's Point was in the position, and at the distance above stated, she blew one whistle to the City of Chester. This signal was not answered by the latter vessel, as she did not recognize that it was intended for her, but supposed it was for one of two steam vessels coming up astern of her. The Pinner's Point then blew a second signal of one whistle, with the same result. The Pinner's Point, no answer having been received to either signal, went on, passed in front of the Martha Helen, and blew another signal of one blast, which was responded to with one blast by the City of Chester. The latter then ported, and reversed her engines, but too late to avoid a collision. The Pinner's Point collided with the barge which was on the port side of the City of Chester, overlapping her bow some 40 feet, striking the barge on the port bow, at her own forward port bitts. The course of the City of Chester was 40 or 50 yards distant from the Norfolk line of wharves. The Martha Helen was on a course about parallel to hers, somewhat further off, about 125 yards out from the line of the wharves. The course of the Pinner's Point crossed the courses of both the other tugs. To recapitulate a little: The Pinner's Point being distant from the City of Chester, on her starboard bow, about 750 yards, blew one blast to her, and got no answer, and blew another, with the same result. She kept right on across the bow of the Martha Helen, blew another blast to the City of Chester, and in a moment came in collision with her, the Martha Helen's bow being then off the City of Chester's stern.

The district court held that the Pinner's Point had the right of way, and that it was the duty of the City of Chester, having the Pinner's Point on her starboard side, to keep out of her way; that not having done so, she violated old rule 19 (new 16), and is solely liable for the collision. We are of opinion that this is too harsh a judgment of the City of Chester. In the first place, she was incumbered with a heavy tow, and her movements more or less hampered. She was under engagement by exchange of signals with the Martha Helen to starboard her helm before the first signal from the Pinner's Point. She was 40 or 50 yards from the line of wharves on her port side, and had the Martha Helen a point and a half on her starboard bow, approaching on a line parallel to her course, the courses of the two being at a distance of 50 to 75 yards from each other. She could not, under these circumstances, have assented to the one blast of the Pinner's Point. If she had done so, she would have broken her engagement with the Martha Helen, and, by porting instead of starboarding her helm, would have run serious risk of collision with her. She did commit a grave fault in not responding to either the first or second signals of the Pinner's Point, and thus advising the Pinner's Point of her dilemma. She thus contributed to the accident. The Lowell M. Palmer, 58 Fed. 701; The New York, 53 Fed. 555. It is no excuse to say that she heard the signal,

Digitized by Google

but did not understand that it was for her. It was the duty of the City of Chester to understand and heed the signal; especially was this the case as she knew that the Pinner's Point was off her starboard bow on a converging course with hers, and, under ordinary circumstances, entitled to the right of way. The Great Republic, 23 Wall. 31.

But the Pinner's Point was not free from fault. The paramount duty of every vessel in proximity to another vessel is to avoid the risk of collision, and to take every precaution to this end; and in harbors this duty is intensified, the utmost care and vigilance being imperatively required from all vessels. The rules of navigation are prescribed for the purpose of governing the action of approaching vessels in all ordinary cases. But notwithstanding the minute provisions of these rules, in construing and obeying them, due regard must be had to all dangers of navigation, and to any special circumstances existing in any particular case, which may render a departure from them necessary in order to avoid immediate danger. Rule 24; The America, 92 U. S. 432. In the present case the Pinner's Point, under rule 19 (now 16), had the right of way, and under normal circumstances should have proceeded on her course. But this did not free her from obligation to take every care, and so to conduct herself as to avoid a course involving risk of collision. Even the fault of the other vessel could not free her from this. The Maria Martin, 12 Wall. 47.

In The Catskill, 38 Fed. 367, a collision had occurred between the steamer Catskill and a ferryboat, the Baltimore, the latter having the right of way. The Baltimore signaled the Catskill, and got no response. Nevertheless, she kept on her course, and did not stop and reverse until she was within 200 yards of the Catskill. See same case, 34 Fed. 660. The court, affirming Judge Brown, says:

"Under such a state of facts, the Baltimore is clearly in fault. Her navigator was not surprised by any sudden indication that another craft, which he supposed intended to obey the rules, meant to violate them. On the contrary, with a very plain intimation that the other vessel was willfully or needlessly continuing on a course which made collision imminent, he kept on in the hope that at the last moment she would discover her error, and seek to rectify it. For thus keeping on until the safety limit was reached and passed, the district judge held the navigator of the Baltimore in fault, and his decision is affirmed."

In The Non Pareille, 33 Fed. 524, Brown, J., says:

"There is no such thing as a right of way to run into unnecessary collision. The rules of navigation are for the purpose of avoiding collision, not to justify either vessel incurring a collision unnecessarily. The supreme duty is to keep out of collision. The duties of each vessel are defined with reference to that object, and, in the presence of immediate danger, both, under rule 24, are bound to give way, and to depart from the usual rule, when adherence to that rule would inevitably bring on collision, which a departure from the rules would plainly avoid."

See, also, The Sunnyside, 91 U. S. 222, 223.

So, in The Aurania, 29 Fed., at page 123, the court quotes as follows:

"Risk of collision means not merely certainty of collision if no efforts be made to avert it, but danger of collision; and there is danger or risk of collision when it is clearly not safe to go on. The John McIntyre, 9 Prob. Div. 135. The distinction between the risk and the certainty of collision is fully commented on by Brett, L. J., in The Beryl, Id. 137, where it was held that the rules required

Digitized by Google

effort to avoid not merely the certainty of a collision, but the risk of it, and that the obligation of the vessel that had the right of way to slacken or stop in order to avoid collision arose with the risk of collision, and not merely when it would otherwise be certain."

See. also, The Khedive, 5 App. Cas. 876.

In The E. A. Packer, 140 U. S. 369, 11 Sup. Ct. 794, a ruling by the house of lords in The Memnon, 62 Law T. (N. S.) 84, 6 Asp. 488, was approved, wherein it was declared that it is the duty of the vessel entitled to keep her course to comply with the rule as to slackening speed, or stopping and reversing, if necessary, and, if she fail to do so, the burden is on her to show that to continue her speed was the best and most seamanlike maneuver.

Apply these principles to the case at bar. The Pinner's Point saw the City of Chester with her tow, and the Martha Helen with her tow, approaching each other on parallel courses. They were between her and the wharf to which she wanted to go. Her movements in the harbor were unobstructed. She was approaching the course of a tug incumbered with a tow, and should have taken her incumbered condition into consideration. Mars. Mar. Coll. 378, and cases quoted. She blew her first blast to the City of Chester, got no response; blew again, with like result. This should have put her on her guard, and have indicated that something was out of the usual course,—something which required explanation. She should have obeyed the requirement of the third pilot rule:

"Rule 3. If, when steamers are approaching each other, the pilot of either vessel fails to understand the course or intention of the other, whether from signals being given or answered erroneously, or from other causes, the pilot so in doubt shall immediately signify the same by giving several short and rapid blasts of the steam-whistle; and if the vessels shall have approached within half a mile of each other, both shall be immediately slowed to a speed barely sufficient for steerage-way until the proper signals are given, answered, and understood, or until the vessels shall have passed each other."

Instead of doing this, the Pinner's Point went on her course, perhaps reducing speed a little, and, getting near to these two approaching steamers, put on full speed. She just cleared the Martha Helen, blew another blast when certainly not more than 75 yards from the City of Chester, and collided with her; she by that time having gotten abreast of the Martha Helen.

It would appear that the protest of the acting master of the Pinner's Point, made a few days after the collision, indicated the situation which the neglect of the foregoing rule by the Pinner's Point, and her stubborn adherence to her right of way without an exchange of signals, had produced, when he declares that "the Pinner's Point increased her speed when near the City of Chester on the one hand, and the Martha Helen, on the other, to prevent being jammed between those vessels."

We are of the opinion that the fault was mutual, and that the damages should be divided. The decree complained of will be reversed, and the case remanded, with directions that a decree be entered as herein indicated.

Digitized by Google

(78 Fed. 198.)

CENTRAL TRUST CO. OF NEW YORK v. BENEDICT et al.

(Circuit Court of Appeals, Eighth Circuit. January 25, 1897.)

No. 797.

JURISDICTION OF FEDERAL COURTS—CITIZENSHIP OF PARTIES—INTERVENTIONS IN FORECLOSURE RECEIVERSHIP CASES.

On July 1, 1885, the G. R. Co. made a first mortgage to the C. Trust Co., a New York corporation, and a second mortgage to B. and others, who were citizens of New York. Subsequently, on the same day, the G. R. Co. entered into a traffic agreement with the U. P. Ry. Co., by which it was provided that the G. R. Co. should be operated by the U. P. Ry. Co., and also that certain cash in the treasury of the G. R. Co. and the proceeds of a part of the first mortgage bonds should be deposited with the C. Trust Co., to be expended, under the joint direction of the president of the U. P. Co. and the trustees of the second mortgage of the G. R. Co., in improving that company's road. The money was deposited, and a part of it spent, leaving a balance in the hands of the C. Trust Co. Thereafter A. and others, stockholders of the U. P. Co., brought suit against it, alleging its insolvency, and praying the court to settle all controversies between it and its creditors and leased lines, to marshal its assets, and liquidate its affairs. The G. R. Co. and other leased lines of the U. P. Co. were made parties, and its mortgages were set out in the bill. Receivers of the U. P. Co. and its leased lines were appointed under the bill. The C. Trust Co. then brought suit for the foreclosure of the first mortgage on the G. R. Co., and the same receivers were appointed in this suit. The trustees of the second mortgage of the G. R. Co. filed an intervening petition in the same courts in which both the suit of A. and others against the U. P. Co. and the C. Trust Co.'s suit against the G. R. Co. were pending, asking an allowance out of the balance of the fund in the hands of the C. Trust Co., as compensation for their services in supervising the disbursement of the fund. The C. Trust Co. answered the petition, objecting to the jurisdiction of the court, and also claiming a lien on the fund for its own services. A master reported that the trustees were entitled to the whole balance of the fund as compensation. *Held*, that notwithstanding the C. Trust Co. and the trustees were citizens of the same state, since the making of an order granting the trustees compensation out of the fund was properly incident to the granting of full relief in the suit of A. and others against the U. P. Co., and since the C. Trust Co. was a mere depositary of the fund, and had no valid claim of its own against it, the court had jurisdiction to make such order for compensating the trustees out of the fund.

Appeal from the Circuit Court of the United States for the District of Nebraska.

This was an intervening petition filed by the appellees, James H. Benedict, Isaac H. Bromley, and F. K. Pendleton, in the circuit courts of the United States for the districts of Nebraska, Kansas, and the Western district of Missouri, which was subsequently heard and determined in the district of Nebraska. The controversy arose out of the following facts, concerning which there is no substantial dispute:

On July 1, 1885, the St. Joseph & Grand Island Railroad Company, a corporation of the state of Kansas, made its first mortgage to the Central Trust Company of New York, the appellant herein, as trustee, to secure an issue of bonds to the amount of $7,000,000. At the same time, it made its second mortgage to the appellees, James H. Benedict, Isaac H. Bromley, and Frank K. Pendleton, as trustees, to secure an issue of $1,679,000 second mortgage bonds. On July 1, 1885, the St. Joseph & Grand Island Railroad Company entered into an agreement with the Union Pacific Railway Company, dated on that day, known as the "Traffic Agreement." By that agreement, it was, in substance, provided that the railroad of the St. Joseph & Grand Island Company should be operated by the Union Pacific Railway Company, and that the earnings of the business should be divided

Digitized by Google

between the two companies on a basis which was specified in the agreement. Said agreement contained, among other things, the following provision: "And it is hereby further mutually agreed by and between the parties hereto that whereas, the said party of the first part (the St. Joseph & Grand Island Railroad Company) now has the sum of about two hundred and eighty-five thousand ($285,000) dollars in cash in the treasury, and that a certain number of first mortgage bonds, to wit, the amount of about four hundred thousand ($400,000) dollars, have been reserved for improvements, it being the intention that the same shall be sold, and the proceeds, together with the sum of two hundred and eighty-five thousand ($285,000) dollars, now on hand as above mentioned, shall be used and applied to the making of improvements, the purchase of steel rails, rolling stock, etc., for the railroad of said party of the first part: Now, then, it is hereby agreed that the said fund, amounting to about seven hundred thousand ($700,000) dollars, as aforesaid, shall be deposited in the Central Trust Company of the City of New York, to be used and expended for the purposes above mentioned, under the joint order of the president of the Union Pacific Railway Company, party of the second part, and a majority of the trustees mentioned in the second mortgage of the party of the first part above referred to." Under the foregoing provision of said agreement, moneys amounting in all to $1,060,992.69 came into the possession of the Central Trust Company of New York, out of which there was drawn the sum of $1,048,087.39, leaving a balance in the hands of the trust company at the time of the filing of the petition amounting to $12,905.30. On October 9, 1893, Oliver Ames, 2d, and others, filed their bill of complaint in equity in the circuit court of the United States for the district of Nebraska, against the Union Pacific Railway Company and others, including the St. Joseph & Grand Island Railroad Company, alleging the insolvency of the Union Pacific Company, setting forth the nature of the liens upon and the claims against its property, and praying that the court would administer the trust fund, marshal the assets, ascertain the liens and priorities, appoint receivers to preserve the property as a system, and enforce the rights and equities of the complainants and all the stockholders and creditors of the Union Pacific Railway Company. Neither the Central Trust Company of New York, nor the appellees herein, Benedict, Bromley, and Pendleton, as trustees, were made parties to the bill. It was alleged in the bill, among other things, that the Union Pacific Railway Company owned $2,301,500 of the capital stock of the St. Joseph & Grand Island Railroad Company out of a total issue of $4,551,100, and that the railroad of the last-mentioned company was incumbered by the two mortgages hereinbefore described. Under this bill, S. H. H. Clark, Oliver W. Mink, E. Ellery Anderson, John W. Doane, and Frederick R. Coudert were appointed receivers. On December 29, 1894, the Central Trust Company of New York, as trustee under the first mortgage of the St. Joseph & Grand Island Railroad Company, filed its bill of complaint for the foreclosure of said first mortgage against the mortgagor company, the Union Pacific Railway Company, and against Benedict, Bromley, and Pendleton, trustees in the second mortgage. On August 27, 1895, an order was made in that suit appointing the same persons receivers of the mortgaged property, who had been theretofore appointed under the bill filed by Oliver Ames, 2d, and others.

Prior to the entry of the last-mentioned order, and on August 6, 1895, Messrs. Benedict, Bromley, and Pendleton, trustees of the second mortgage of the St. Joseph & Grand Island Railroad Company, filed in the three courts in which the Central Trust Company's bill of foreclosure was pending, namely, in the circuit courts of the United States for the districts of Nebraska, Kansas, and the Western district of Missouri, their intervening petition to be allowed compensation for their services in supervising the disbursement of the fund that had been deposited with the Central Trust Company, in manner aforesaid, under the provisions of the aforesaid traffic agreement. They demanded, in substance, that the entire fund remaining in the hands of the Central Trust Company, to wit, $12,905.30, be paid to them as compensation for their services. Upon this petition, the circuit court made an order, referring the petition and the answers thereto to the Honorable W. D. Cornish, who had been theretofore appointed as special master in the aforesaid cases, and directed that copies of the petition and order be served upon the Central Trust Company, as trustee under the first mortgage made by the St. Joseph & Grand Island Railroad Company. The Central Trust Company filed an answer, in which, among other things, it averred that the said intervening petition

Digitized by Google

which had been filed "shows upon its face that this court has no jurisdiction to entertain the same." By the answer in question, the Central Trust Company also put in issue the extent and value of the alleged services that had been rendered by the interveners. It further alleged, at the conclusion of its answer, that it had a lien upon said balance in its hands for the amount of its reasonable compensation for its services in connection therewith, and for its expenses in respect thereto. The special master, to whom the case was referred, subsequently made his report, in which he found, in substance, that the fund unexpended was the property of the St. Joseph & Grand Island Railroad Company, subject to the provisions of the traffic agreement of July 1, 1885; that the receivers appointed in the above-mentioned suits had never taken actual possession of the fund; and that the petitioners were entitled to the whole fund, as compensation for their services. The Central Trust Company excepted to this report. The exceptions were overruled; the report of the master was confirmed; and an order was thereupon made in accordance with the recommendations of the master directing that the fund in controversy be paid to the interveners. From the order so made, the trust company has appealed.

Adrian H. Joline and Butler, Stillman & Hubbard, for appellant.
F. K. Pendleton and Parrish & Pendleton, for appellees.

Before CALDWELL and THAYER, Circuit Judges.

THAYER, Circuit Judge, after stating the facts as above, delivered the opinion of the court.

The principal question discussed by counsel in their briefs is whether the circuit court had jurisdiction to make the order from which the appeal was taken. In this behalf it is contended for the appellant that inasmuch as the circuit court could not have entertained a suit between the appellant and the appellees, both of them being citizens of the state of New York, and inasmuch as it had not acquired possession of the fund in controversy, either actual or constructive, it had no power to make the order appealed from, and the same is void. It may be conceded that the jurisdictional point would have great weight if the order made by the circuit court was not properly incident to the granting of full and complete relief in the suit of Ames et al. against the Union Pacific Railway Company et al., which is referred to in the foregoing statement, and if it was true that the Central Trust Company had an interest in the fund in controversy, other than that of a mere depositary. But if the suit brought by Ames et al. against the Union Pacific Railway Company et al. was of such a nature as rendered it necessary or proper in that proceeding to administer upon the fund in controversy, and if, at the time the order was made, the trial court had before it all the parties who had a proprietary interest in the fund, and authority to control the disbursement of the same, then we do not see that the validity of the order can be successfully challenged. It admits of no doubt that the Central Trust Company (hereafter termed the "Trust Company") was a mere depositary of the fund. It held it at all times as a banker, subject to the order of the president of the Union Pacific Railway Company and the appellees, or a majority of them, who were trustees in the second mortgage executed by the St. Joseph & Grand Island Railroad Company (hereafter termed the "Grand Island Company"). The trust company had no proprietary interest in or lien upon the fund in

Digitized by Google

question. The traffic agreement named the trust company as the depositary of the fund, but it gave it no power of control over the same, other than the power to disburse it pursuant to orders and directions from time to time given by the president of the Union Pacific Railway Company and the trustees in the second mortgage. The master properly held and reported that the fund belonged to the Grand Island Company, and that the appellees and the president of the Union Pacific Railway Company, the latter acting in an official capacity, were trustees of the fund, having the sole power to disburse it for the purposes named in the traffic agreement. In no aspect of the case, so far as we can see, was the trust company given any authority to control the expenditure of the fund, or to refuse to pay drafts that might be drawn upon the fund by the trustees, who had been appointed to expend it. In a certain sense, the trust company was a mere subagent of the trustees, whose orders, when drawn upon the fund, it was bound at all times to honor. Such appear to have been the conditions under which the deposit with the trust company was made.

Passing to the second inquiry above suggested, we think it is manifest that the suit of Ames et al. against the Union Pacific Railway Company et al. was of such a nature and contemplated such relief that the circuit court, by an order made in that case, could properly dispose of the fund in controversy, especially after the appellees, as trustees in the second mortgage, had made themselves parties to the proceeding. It was a suit brought by the stockholders of an insolvent corporation to wind up the company on the ground of its insolvency, to adjust and settle all controversies between the Union Pacific Railway Company and its creditors, and between that company and its leased lines, including the Grand Island Company, and, generally, to marshal all the corporate assets, and to liquidate the company's affairs. When the appellees, Messrs. Benedict, Bromley, and Pendleton, made themselves parties to the Ames suit, and asked for an allowance against the fund in controversy, we do not perceive that there was any lack of power in the court to grant the relief prayed for, and to dispose of the fund. All parties who had a beneficial interest in the fund, or power to control its disbursement, to wit, the Union Pacific Railway Company, the Grand Island Company, and the trustees in its second mortgage, were then before the court, and, by virtue of this fact, the fund itself became subject to the orders of the court. Vermont & C. R. Co. v. Vermont Cent. R. Co., 46 Vt. 792; Chaffee v. Quidnick Co., 13 R. I. 442; Sercomb v. Catlin, 128 Ill. 556, 21 N. E. 606; Langford v. Langford, 5 Law J. Ch. (N. S.) 60; Schindelholz v. Cullum, 12 U. S. App. 242, 249, 5 C. C. A. 293, and 55 Fed. 885; Gluck & B. Rec. p. 978. The result might be different if the trust company showed any substantial right to the fund which it could interpose, as against the Union Pacific Railway Company and the trustees in the second mortgage of the Grand Island Company, for whose benefit the fund was created. But such is not the fact. This record fails to disclose any such right. Inasmuch as the trust company held the fund merely as a banker, it does not appear that

Digitized by Google

there was any reasonable foundation for the allegation that the trust company had a lien upon the balance of the fund in its hands. The record shows that the trust company is simply a depositary of the fund, and that it holds it subject to the disposal of the parties last named. As against them and the Grand Island Company, the trust company can assert no adverse right. Moreover, occupying such a position, the trust company is not concerned in the question whether the appellees were entitled to compensation for their services as trustees in supervising the expenditure of the fund, nor in the further question whether the compensation allowed to them by the trial court was excessive. Having no valid claim of its own against the fund, and being a mere debtor of the Grand Island Company, it is only concerned in the question whether the order made by the trial court will protect it from all further claims on the part of those to whom the fund belongs. We have no doubt that the order made will afford it such protection. The order appealed from is therefore affirmed.

(78 Fed. 205.)

FIDELITY INSURANCE, TRUST & SAFE-DEPOSIT CO. et al. v. DICKSON.

(Circuit Court of Appeals, Seventh Circuit. February 12, 1897.)

No. 364.

1. APPEALABLE DECREES—INTERLOCUTORY ORDERS—INJUNCTION.
   The assembling of a prayer for an unnecessary injunction with a prayer for modification of a decree or order will not warrant a review of the decree or order, when a direct appeal therefrom is unauthorized by law.
2. SAME.
   Whether an appeal lies from an order dismissing, without prejudice, an application for an injunction, quære.

Appeal from the Circuit Court of the United States for the Southern District of Illinois.

The Fidelity Insurance, Trust & Safe-Deposit Company, one of the appellants, on January 2, 1894, filed its bill in the circuit court of the United States for the Southern district of Illinois against the Litchfield, Carrollton & Western Railroad Company for the foreclosure of a trust deed or mortgage upon its railway, issued to it as trustee to secure bonds to the amount of $516,000, charging default on July 1, 1893, in payment of interest, asserting the insolvency of the railroad company, and asking for the appointment of a receiver. In compliance with the prayer of the bill, the court, on May 8, 1894, appointed C. H. Bosworth receiver, who duly qualified and entered upon the discharge of his duties. On the 4th day of September, 1894, upon the petition of the receiver, the trustee and the bondholders appearing and not opposing, a decree was entered authorizing the issue of receiver's certificates to an amount not exceeding in the aggregate the sum of $125,000, which should be a first lien on the corpus of the mortgaged property, and entitled to priority of payment. The receiver was authorized to negotiate the certificates, or so many of them as should be necessary for the purposes authorized, at not less than 95 per cent. of their par value net to the receiver; and out of the proceeds to apply $48,000 to the repair of the railway in the respects specified in the decree, $12,000 to the payment of unpaid taxes and wages, as specified, and $15,000 to the payment of obligations incurred or to be incurred

Digitized by Google

by the receiver for other supplies, materials, repairs, and betterments indispensably necessary. The decree limited the expenditure at that time to the sum of $75,000, reserving the right to authorize the issuance of the balance of the certificates of like date, and lien for the payment of other past-due claims for taxes, labor, and materials from time to time as the same should appear to be equitable. On February 4, 1896, upon the application of certain bondholders, other bondholders and the complainant appearing, the cause was ordered to be speeded, and, it appearing to the court that the physical condition of the property and railway was bad, and that no provision had been made by the bondholders for funds wherewith to repair the road, and that the receiver had been unable to market the certificates theretofore authorized at the price designated in the decree of September 4, 1894, it was directed that the receiver have leave in his discretion to sell the receiver's certificates so authorized at not less than 90 per cent. of their par value, and also to apply all surplus earnings of the road above current operating expenses to necessary repairs and betterments. The receiver disposed of $28,000 in amount of these certificates, and on the 28th of April, 1896, reported to the court his inability to sell any more of them, and suggested his resignation if one could be found who would be able to dispose of the unsold certificates. Thereupon the court appointed Joseph Dickson, the appellee, receiver of the road. This, it is said, was done upon the suggestion of one Nelson that he would purchase the remaining $97,000 of certificates at 90 per cent. of their face value in the event of the appointment of Mr. Dickson. This appointment was made, it is said, against the protest of the bondholders, the stockholders, and the principal creditors of the road. The district judge, who, in the absence of the circuit judges, had made all these decrees, was absent from his district from and after May 8, 1896, and until after the entry of the decree or order of May 25, 1896, hereinafter mentioned, and from which the present appeal is taken. On the 23d day of May, 1896, the railroad company and the trustee, the appellants, filed their several petitions in the court below setting forth the history of the suit; charging certain facts tending to show that Mr. Dickson, as receiver, would represent conflicting interests, and was, therefore, not a proper person to hold the position; that the railway had been put in a fairly safe and operative condition; and that, as a decree of sale was to be expected at an early date, there was no immediate necessity for the issuance of further certificates under the order of September 4, 1894; and praying, in substance, that the order of April 28, 1896, appointing Joseph Dickson as receiver of the railroad, may be vacated and set aside, and that the order authorizing the issuance of receiver's certificates should be vacated or modified so as to prohibit the further issuance of receiver's certificates thereunder; and also praying that Dickson might be enjoined and restrained from receiving, taking, or managing the railroad, that Bosworth and Dickson might be enjoined and restrained from selling the receiver's certificates, and that Nelson, who had proposed to purchase the certificates, might be enjoined and restrained from purchasing the same, or any part thereof. This petition came on to be heard on the 25th day of May, 1896, before one of the circuit judges in the absence of the district judge, and the following order was thereupon entered: "On this day came on to be heard the petition filed herein on May 23, 1896, by said defendant, and, after hearing on the petition and argument of counsel, the court ordered that said petition be dismissed without prejudice." From that decree or order the railroad company and the trustee, complainant, appealed to this court.

Bluford Wilson, for appellants.
William Burry, for appellee.

Before WOODS and JENKINS, Circuit Judges.

JENKINS, Circuit Judge, after this statement of the facts, delivered the opinion of the court.

This appeal cannot be sustained. If it be assumed that the action of the circuit court, in appointing a receiver, or in the issuance of receiver's certificates, can, under any circumstances, be reviewed in this court, it is sufficient to say that the decrees or orders in that

Digitized by Google

respect are not appealed from. The appellants, apparently concluding that such decrees or orders could directly be brought here for review only by appeal from the final decree in the foreclosure suit, seek by indirection to obtain their review by moving to vacate or modify them, coupling with their demand in that regard a prayer that the receiver sought to be removed from office might be restrained from continuing the management of the railway, and that he and the former receiver might be restrained from selling the receiver's certificates; and that Nelson, the proposing purchaser, who was not, and was not sought to be, made a party to the suit, should be restrained from purchasing them. It is said that because such an injunction was asked and denied, although without prejudice, the decrees or orders are now before us for review by virtue of the statute allowing an appeal from an order denying an interlocutory injunction. If the decrees or orders in question had been vacated or modified as desired, no injunction would have been necessary. The removal of the receiver would have taken from him all authority in the management of the railroad. The modification of the order for the issuance of the receiver's certificates, limiting the issuing of them to those already marketed, would withdraw from the receiver all power to issue, and, if issued in defiance of the modifying order, the certificates would be inoperative to create any incumbrance upon the mortgaged estate or its revenues. Besides this, there was no suggestion in the petition that either Bosworth, who had resigned as receiver, and whose resignation had been accepted, or Dickson, the present receiver, had ever threatened or proposed to issue certificates otherwise than as directed by the court. It was also quite unnecessary and unwarranted to enjoin one not a party to the suit, and not sought to be made a party, from purchasing certificates which, if unauthorized by the court, would be but so much waste paper, so far as the mortgaged estate is concerned. The prayer for an injunction was not germane, is manifestly pretentious merely, and injected into the prayer of the petition without an allegation to sustain it, for the purpose, in case the decrees or orders should not be vacated or modified as desired, of seeking a review here of the decrees or orders from which no direct appeal will lie. The assembling of a prayer for an unnecessary injunction with a prayer for modification of a decree or order will not warrant a review of the decree or order when a direct appeal therefrom is unauthorized by law, even if we assume that an appeal from an order dismissing without prejudice an application for an injunction will lie. It is undoubtedly true that in general a decree dismissing a bill without prejudice is not appealable, and this because a decree is not final for the purposes of an appeal unless it terminates the litigation between the parties upon the merits (St. Louis, I. M. & S. R. Co. v. Southern Exp. Co., 108 U. S. 24, 2 Sup. Ct. 6), and it can scarcely be truthfully said that a decree dismissing an appeal without prejudice purports to pass upon the merits of the bill. Whether, under the statute authorizing an appeal to the circuit courts of appeals from an order denying an interlocutory injunction, an order deny-

Digitized by Google

ing without prejudice an application for such writ of injunction would be appealable, we do not now decide. The appeal will be dismissed.

(78 Fed. 208.)

MERRILL v. NATIONAL BANK OF JACKSONVILLE.

(Circuit Court of Appeals, Fifth Circuit. December 8, 1896.)

No. 542.

APPEAL.—DISMISSAL.—DECREE UNDER MANDATE.

An appeal, taken to the circuit court of appeals from a decree of the circuit court entered in accordance with the mandate of the former court upon a previous appeal, will be dismissed, even though an appeal lie to the supreme court from the decision of the circuit court of appeals.

Appeal from the Circuit Court of the United States for the Southern District of Florida.

Duncan U. Fletcher, for appellant.
John C. Cooper, for appellee.

Before PARDEE and McCORMICK, Circuit Judges, and MAXEY, District Judge.

PARDEE, Circuit Judge. This case was before this court at the last term, and was then heard and determined upon its merits. 21 C. C. A. 282, 75 Fed. 148. In the decree then rendered we reversed the former decree of the circuit court, and remanded the cause, with instructions to enter a decree in accordance with the views expressed in the opinion of the court, in which opinion the decree to be entered was specifically outlined and determined. On entering the mandate in the circuit court a decree in exact accordance with our mandate was entered, whereupon T. B. Merrill, receiver, sued out the present appeal.

The appellee has moved to dismiss the appeal, on the ground that no appeal lies from a decree entered in the circuit court in accordance with the mandate of this court; and this motion should be granted. In Stewart v. Salamon, 97 U. S. 361, it was expressly decided that an appeal from the decree which the circuit court passed in accordance with the mandate of the supreme court upon a previous appeal will, upon the motion of the appellee, be dismissed, with costs. In Humphrey v. Baker, 103 U. S. 736, the precise question was again decided, and in the same way. Stewart v. Salamon, supra, has been continuously approved. Mackall v. Richards, 116 U. S. 45, 6 Sup. Ct. 234; Gaines v. Rugg, 148 U. S. 228, 242, 13 Sup. Ct. 611; Railway Co. v. Anderson, 149 U. S. 237, 242, 13 Sup. Ct. 843; Smelting Co. v. Billings, 150 U. S. 31, 37, 14 Sup. Ct. 4; In re Sanford Fork & Tool Co., 160 U. S. 247, 259, 16 Sup. Ct. 291.

In opposition to the motion to dismiss it is urged that, under the act entitled "An act to establish circuit courts of appeals, and to define and regulate in certain cases the jurisdiction of the courts of the United States, and for other purposes," approved March 3, 1891,

Digitized by Google

an appeal lies to the supreme court of the United States from the decision of this court, and therefore the present appeal should be heard. If we concede that such appeal lies, we see in it no reason to vary from the uniform practice established by the supreme court in regard to second appeals in the same case.

The appeal is dismissed.

(78 Fed. 209.)

FARMERS' LOAN & TRUST CO. et al. v. McCLURE.

(Circuit Court of Appeals, Eighth Circuit. January 25, 1897.)

No. 785.

APPEAL—REVIEW—SOLICITOR'S COMPENSATION IN FORECLOSURE PROCEEDINGS.

When a question of the value of the services of a solicitor, rendered in a suit for the foreclosure of a mortgage, has been decided, upon conflicting evidence, by the court in which the suit is pending, and which is familiar with the proceedings therein and the amount of services rendered, such decision will not be disturbed by an appellate court, in the absence of an obvious error of law, or a serious and important mistake in the consideration of the evidence.

Appeal from the Circuit Court of the United States for the Eastern District of Arkansas.

J. G. Taylor (J. M. Taylor, Herbert B. Turner, David McClure, and Louis B. Rolston were with him on the brief), for appellant.

John McClure, for appellee.

Before CALDWELL, SANBORN, and THAYER, Circuit Judges.

SANBORN, Circuit Judge. This is an appeal from an interlocutory decree, which granted an intervening petition of John McClure, the appellee, for compensation for services and expenses as solicitor for the complainant in a suit to foreclose a railway mortgage. Prior to July 30, 1895, the holders of a large majority of the bonds secured by the mortgage made on August 2, 1892, by the Pine Bluff & Eastern Railroad Company to the Farmers' Loan & Trust Company, as trustee for the bondholders, consulted the appellee, John McClure, an attorney resident at Little Rock, in the state of Arkansas, regarding the foreclosure of this mortgage. They were anxious to have it foreclosed, and attempted to persuade the Farmers' Loan & Trust Company to employ McClure as its solicitor to conduct the foreclosure proceedings. The estate of Amos C. Barstow, which held a majority of these bonds, advanced to McClure the sum of $500 on account of his expenses and services, and he prepared a bill for the foreclosure of the mortgage upon the property of the railroad company. On July 30, 1895, the resident attorneys of the Farmers' Loan & Trust Company authorized him by telegraph to file the bill for the foreclosure of the mortgage upon the terms contained in a letter which followed the telegram. McClure filed the bill, but, when the letter was received, was unwilling to proceed with the litigation on the terms it disclosed. Before its receipt he had given notice of a motion for the appoint-

Digitized by Google

ment of a receiver of the property of the railroad company. After some correspondence between him and the attorneys for the trust company, he made a motion in the circuit court on August 19, 1895, for leave to withdraw from the case as a solicitor, because of differences arising between himself and the solicitors of the trust company, and the court took his application under advisement, and ordered him to continue to discharge his functions as a solicitor in the cause until the further order of the court. On October 12, 1895, he renewed his motion for leave to withdraw from the case, and the court granted it. On October 19, 1895, he filed an intervening petition in the case, and asked for an allowance of $2,500 for services, and that the sum of $500, which had been advanced to him for services and expenses therein by the estate of Amos C. Barstow, should be allowed, and repaid to that estate. The trust company answered the petition, testimony was taken, and upon a final hearing the court below decreed that McClure should recover of the Pine Bluff & Eastern Railroad Company $2,500 for his services; that the estate of Amos C. Barstow should recover $250, with interest; that these amounts were entitled to be secured by a lien upon the mortgaged property superior to that of the mortgage debt, and that they should be paid out of the proceeds of the sale of the property before that debt. The trust company and the railroad company have appealed from this decree.

The only question in this case is as to the amount which should have been allowed by the court below for the expenses and services of the appellee, as solicitor for the complainant, for preparing and filing the bill of foreclosure and conducting the subsequent proceedings in the suit until he was permitted to withdraw from it on October 12, 1895. We say this is the only question, because the $250 allowed to the estate of Barstow is in reality but a part of the compensation for the expenses and services of McClure. Upon this question but two witnesses testified,—the appellee himself, and Mr. Hemingway, a witness called by the trust company. The testimony of the former fully sustains the finding and decree of the court. The testimony of the latter is that the value of his services was from $500 to $1,250. The court below was in a far better situation to determine which of these witnesses correctly estimated the value of the services rendered by this solicitor than this court can possibly be. The judge who entered this decree below was familiar with the proceedings in his own court, with the character of this litigation, with the controversies, if any, that had arisen in it, with the amount of services that had been rendered by each of the solicitors, and with every step that had been taken in the case. It is the settled rule of the federal courts that where the court below has considered conflicting evidence, and made its finding and decree thereon, they must be taken as presumptively correct; and, unless an obvious error has intervened in the application of the law, or some serious or important mistake has been made in the consideration of the evidence, the decree should be permitted to stand. Tilghman v. Proctor, 125 U. S. 136, 8 Sup. Ct. 894; Kimberly v. Arms, 129 U. S. 512, 9 Sup. Ct. 355; Furrer v. Ferris, 145 U. S. 132, 134, 12 Sup. Ct. 821; Warren v. Burt, 12

Digitized by Google

U. S. App. 591, 7 C. C. A. 105, and 58 Fed. 101; Plow Co. v. Carson, 36 U. S. App. 456, 18 C. C. A. 606, and 72 Fed. 387. In view of this principle, and in consideration of the great weight which ought to be given to the opinion of the trial court as to the value of the services of solicitors in cases pending before it, we are unwilling to disturb the decree in this case. Let it be affirmed, with costs.

(78 Fed. 211.)

FARMERS' LOAN & TRUST CO. v. McCLURE.

(Circuit Court of Appeals, Eighth Circuit. January 25, 1897.)

No. 786.

1. PARTIES TO APPEALS—REFUSAL TO JOIN.
   All parties to the record who appear to have an interest in a decree or order challenged by appeal must be given an opportunity to be heard on such appeal, but when it appears by the record that one of several parties jointly interested in a proceeding has been notified in writing to appear, and has failed to do so, or, if appearing, has refused to join, or where it otherwise conclusively appears by the record that such a party has had knowledge of, and refused to join in an appeal, the appeal taken by another party alone may proceed without him.
2. ALLOWANCE OF APPEAL—MISTAKE.
   When the circuit court has made an order allowing an appeal on behalf of a party upon an erroneous appearance of counsel or under a mistake of fact, it may and should, upon learning the truth, vacate such order.

Appeal from the Circuit Court of the United States for the Eastern District of Arkansas.

J. G. Taylor, for appellant.
John McClure, for appellee.

Before CALDWELL, SANBORN, and THAYER, Circuit Judges.

SANBORN, Circuit Judge. On July 30, 1895, the Farmers' Loan & Trust Company, as trustee for the bondholders under a mortgage made by the Stuttgart & Arkansas River Railroad Company on March 1, 1890, filed a bill in the circuit court for the Eastern district of Arkansas to foreclose that mortgage. The only defendant in that suit was the railroad company. On August 20, 1895, on the motion of the trust company, a receiver of the mortgaged property was appointed. On October 12, 1895, John McClure, the appellee, filed a petition of intervention in that suit, in which he prayed that an allowance of $2,500 might be made to him as compensation for services as attorney for the complainant in the suit, and that $500 might be allowed to the estate of Amos C. Barstow. On January 7, 1896, the court decreed that the appellee should recover of the Stuttgart & Arkansas River Railroad Company $2,500 and his costs, that the estate of Amos C. Barstow should recover $250 from the railroad company, that these amounts constituted liens secured upon the mortgaged property superior to the lien of the mortgage debt, that the receiver should issue certificates to

Digitized by Google

these two creditors for the amounts so found to be due to them, and that he should ultimately pay the certificates out of the proceeds of the sale of the mortgaged property before he paid the mortgage debt. On February 1, 1896, J. M. & J. G. Taylor, as attorneys of the Farmers' Loan & Trust Company, and as attorneys of the Stuttgart & Arkansas River Railroad Company, prayed and were allowed an appeal to this court from this decree. On April 11, 1896, the circuit court made the following order:

"Now on this day, a day of the October term, 1895, it being made to appear to the court that the defendant the Stuttgart & Arkansas River Railroad Company hath not prayed an appeal in this cause, and that said defendant never authorized J. M. & J. G. Taylor, as solicitors, to pray an appeal on its behalf, the order granting said appeal at the present term on the 1st day of February, 1896, is set aside, and held for naught, in so far as it grants an appeal to the Stuttgart & Arkansas River Railroad Company."

Upon this state of facts the appellee moved to dismiss the appeal in this case on the ground that the Stuttgart & Arkansas River Railroad Company is interested in the ruling and decree in issue, and is not before the court. The rule that all the parties to the record who appear to have an interest in the decree or order challenged must be given an opportunity to be heard on an appeal from it is too well settled to warrant discussion. The reasons for the rule are stated in Masterson v. Herndon, 10 Wall. 416, and in Hardee v. Wilson, 146 U. S. 179, 181, 13 Sup. Ct. 39. Two of them are: (1) "That the successful party may be at liberty to proceed in the enforcement of his judgment or decree against the parties who do not desire to have it reviewed;" and (2) "that the appellate tribunal shall not be required to decide a second or third time the same question on the same record." The fact that a mortgagor, who is a party to a record in a suit to foreclose his mortgage, is interested in every order or decree in such a suit which gives the claim of an intervener a priority over the mortgage, or a right to priority of payment out of the proceeds of the sale of the mortgaged property, seems obvious, because such an order or decree necessarily increases by the amount so paid the deficiency for which the mortgagor will remain personally liable after the sale of the property. This is clearly demonstrated in the opinion of Judge Shiras in Gray v. Havemeyer, 10 U. S. App. 456, 3 C. C. A. 497, and 53 Fed. 174, 178, and in Davis v. Trust Co., 152 U. S. 595, 14 Sup. Ct. 693. The Stuttgart & Arkansas River Railroad Company is personally liable for the mortgage debt under the bonds and mortgage in this suit. If the property mortgaged does not realize at the sale the necessary amount to pay the mortgage debt, the railroad company will remain indebted for the deficiency, which will doubtless ultimately be evidenced by a judgment against it. If the interlocutory decree, which allows and gives priority over the mortgage debt to the claims of the appellee and of the estate of Amos C. Barstow, is affirmed, the judgment against the railroad company for the deficiency will be at least $2,750 more than it will be if that decree is reversed. But the Stuttgart & Arkansas River Railroad Company is not a party to the appeal before this court. The at-

Digitized by Google

torneys who prayed an appeal on its behalf did so without authority, and the order of the court below, which set aside and vacated the order allowing the appeal on behalf of the Stuttgart & Arkansas River Railroad Company, dismissed that company from this proceeding. We have no doubt of the validity of that order. The power of the circuit court was ample to modify or vacate such an order when it had been induced by the erroneous appearance of counsel, and had been made by the court under a mistake of fact. When the truth came to the attention of the court, it was not only its province, but its duty, to correct the error, and make the order which it would have made if it had known the facts. Fisher v. Simon, 32 U. S. App. 132, 14 C. C. A. 443, and 67 Fed. 387; Lincoln Nat. Bank v. Perry, 32 U. S. App. 15, 14 C. C. A. 273, and 66 Fed. 887; Ex parte Roberts, 15 Wall. 384.

But the Farmers' Loan & Trust Company had the right to appeal from the interlocutory decree, even if the Stuttgart & Arkansas River Railroad Company was unwilling to do so. The old remedy in such a case was by summons and severance. Where one of the parties jointly interested in a cause of action or proceeding refused to participate in the assertion of the joint rights of the parties, it was the practice for the other party to issue a writ of summons, by which the former was brought before the court, and, if he still refused to proceed, an order or judgment of severance was made, so that the latter could proceed alone. The effect of this judgment of severance was to bar him who refused to proceed from subsequently prosecuting the same right in another action or proceeding. This remedy was applied to writs of error. Brooke, Abr. 238, tit. "Summons and Severance"; 2 Rolle, Abr. 488, same title; Archb. Prac. C. P. 232; Tidd, Prac. 129, 1136, 1169; Masterson v. Herndon, 10 Wall. 416. Mr. Justice Miller, in delivering the opinion of the supreme court in the latter case, declared that this remedy had fallen into disuse in modern practice, and was unfamiliar to the profession. He said that the supreme court did not attach much importance to the technical mode of proceeding called "summons and severance," and that it would hold an appeal good if it appeared in any way by the record that the party who had refused to join in the appeal or writ of error had been notified in writing to appear, and had failed to appear, or, if appearing, had refused to join. He said that there should be a written notice and due service, or the record should show his appearance and refusal, and that the court on that ground granted an appeal to the party who prayed for it as to his own interest. It is plain that this is the practice which has been adopted by the supreme court of the United States, and it obviously ought to prevail in this court. The purpose of a summons and severance was to bar the party who refused to join or to take part in the appeal or writ of error from subsequently asserting his rights in another appeal or proceeding upon the same record. A notice to him to appear, and his refusal, or his refusal to proceed after he has appeared in the action, would undoubtedly be held by the supreme court, and must be by this court, to be a bar to subsequent proceedings on his behalf to as-

Digitized by Google

sert the rights in which he is jointly interested. There was no formal notice to the Stuttgart & Arkansas River Railroad Company to appear in this case and take part in this appeal; but that railroad company did appear, and moved to set aside the appeal which had been allowed on its behalf. The order which it thus obtained, showing, as it does, the appearance of the railroad company in the court below to set aside the allowance of its appeal, shows as conclusively its knowledge of the appeal, and its refusal to join in or proceed with it, as a formal notice and flat refusal to proceed could have done. For this reason we think the appeal ought not to be dismissed, and the motion to dismiss is denied. Upon the merits, the essential facts of this case are the same as in Farmers' Loan & Trust Co. v. McClure, 24 C. C. A. 64, 78 Fed. 209, and for the reasons stated in the opinion in that case, which is filed herewith, the decree below is affirmed, with costs.

(78 Fed. 214.)

DODSON v. FLETCHER.

(Circuit Court of Appeals, Eighth Circuit. January 26, 1897.)

No. 827.

APPEAL—NECESSARY PARTIES—CITATION AND SEVERANCE.

All the parties to a suit or proceeding who appear from the record to have an interest in an order, judgment, or decree challenged in an appellate court must be given an opportunity to be heard there, before such court will proceed to a decision upon the merits of the case; and an appeal taken by one party only, without citation to or appearance by another party interested in the decree, will be dismissed.

Appeal from the Circuit Court of the United States for the Eastern District of Arkansas.

John Fletcher, for the motion.

J. D. Cook, opposed.

Before SANBORN and THAYER, Circuit Judges, and LOCHREN, District Judge.

SANBORN, Circuit Judge. On March 7, 1896, the Wear & Boogher Dry-Goods Company, a judgment creditor of the Southwestern Arkansas & Indian Territory Railroad Company, filed a bill in the circuit court for the Eastern district of Arkansas against the latter corporation for the appointment of a receiver of its property, and for authority to such receiver to proceed with the construction of its railroad. On March 27, 1896, John G. Fletcher, the trustee for the bondholders secured by a deed of trust made by the railroad company on April 10, 1894, filed an intervening petition in this suit, in which he prayed that the trust deed might be foreclosed, and that the property of the railroad company might be sold, and its proceeds applied to the payment of these bonds. On April 13, 1896, T. M. Dodson, the appellant, filed his petition

Digitized by Google

in intervention in this suit, in which he alleged that on December 4, 1895, he made a contract with the railroad company for the construction of its railroad by means of which he acquired a lien for $12,054, which was still due to him upon his contract; and prayed that his lien might be declared to be superior to that of all the other parties in the suit. On April 30, 1896, Fletcher, the trustee for the bondholders, answered the petition of Dodson, denied the existence of his lien, and prayed that the lien of the trust deed might be found to be superior to that of all other parties to the suit. The question presented by the intervening petition of the appellant was heard upon the merits by the court below, and an interlocutory decree was entered, to the effect that he had a valid claim against the railroad company for $12,054.90, which should be paid out of the assets of the company as other claims of the same class were paid, but that he had no lien upon the property of that company superior to the lien of the trustee, Fletcher. From this decree Dodson appealed, and caused a citation to be issued against John G. Fletcher alone. Fletcher moves to dismiss this appeal upon the ground that neither the railroad company nor the judgment creditor has been cited to the hearing of this case. The appellant meets this motion with a voluntary appearance in this court of the railroad company and of the receiver who was appointed by the court below in the main suit, but no citation has been served upon the judgment creditor, the Wear & Boogher Dry-Goods Company, nor has that company appeared in this court.

All the parties to a suit or proceeding who appear from the record to have an interest in the order, judgment, or decree challenged in the appellate court must be given an opportunity to be heard there before that court will proceed to a decision upon the merits of the case. Masterson v. Herndon, 10 Wall. 416; Hardee v. Wilson, 146 U. S. 179, 181, 13 Sup. Ct. 39; Davis v. Trust Co., 152 U. S. 590, 14 Sup. Ct. 693; Gray v. Havemeyer, 10 U. S. App. 456, 3 C. C. A. 497, and 53 Fed. 174, 178; Farmers' Loan & Trust Co. v. McClure (January 25, 1897) 24 C. C. A. 66, 78 Fed. 211. The reasons for this rule are that the successful party may be at liberty to enforce his judgment, decree, or order without delay against those parties who do not desire to have it reviewed, and that the appellate court may not be required to decide the same question more than once upon the same record. It is evident in this case that the Wear & Boogher Dry-Goods Company has a direct interest in the interlocutory decree which is here challenged. That decree, as it now stands, places the claim of the appellant upon a par with that of the dry-goods company, and adjudges that the two claims shall be paid pro rata from the proceeds of the property of the railroad company after the lien of the trust deed has been satisfied. If this court should reverse this decree, and enter one to the effect that the appellant has a lien upon the property of the railroad company paramount to that of the trustee for the bondholders, its effect would be to further postpone the claim of the dry-goods company to the payment of $12,054.90, which now stands upon an equality with it. The dry-goods

Digitized by Google

company was therefore a necessary party to this appeal, and, as it had no notice of its hearing, the appeal must be dismissed, with costs. It is so ordered.

(78 Fed. 222.)

RITTER v. ULMAN et al.

(Circuit Court of Appeals, Fourth Circuit. February 2, 1897.)

No. 174.

1. INJUNCTION—ESTOPPEL BY ACQUIESCENCE—CUTTING TIMBER.

One R. agreed with the E. Co. for the purchase of certain timber lands, and, with its consent, began to cut the timber. Shortly after this agreement, and before the formal contract of sale was executed, certain parties, claiming the land, notified R. of their claim, and forbade him to cut the timber. They then brought an action of ejectment against the E. Co., and, upon a bill filed against it, obtained an injunction restraining it from cutting timber on the land. Later, but within little more than a year from the making of R.'s agreement with the E. Co., the claimants brought an action of ejectment against R., and, upon a bill filed, obtained an injunction restraining him from cutting the timber, which injunction R. moved to dissolve. *Held*, that there had been no such acquiescence on the part of the claimants as to estop them from claiming an injunction against R. 72 Fed. 1000, affirmed.

2. APPEAL—DISCRETION OF COURT—DISSOLUTION OF INJUNCTION.

An appellate court will not interfere with the exercise of the discretion of a chancellor in refusing to dissolve an injunction, either absolutely or upon condition of giving security, unless there is manifest error in the conclusion reached by him.

Appeal from the Circuit Court of the United States for the District of West Virginia.

Malcolm Jackson and Edgar P. Rucker, for appellant.

S. L. Flournoy (James H. Ferguson, on the brief), for appellees.

Before SIMONTON, Circuit Judge, and MORRIS and BRAWLEY, District Judges.

SIMONTON, Circuit Judge. This case comes up on appeal from the circuit court of the United States for the district of West Virginia. The appellant in 1894 purchased from the trustees of the Elkhorn & Sandy River Land Company the timber of certain kind and character growing on a tract of land of about 6,000 acres, in McDowell county, W. Va., described as the "Watershed of Brown's Creek." The contract of purchase was formally executed 31st July, 1894. The appellant, however, under a verbal agreement, had already commenced to cut timber off the land. On 27th July, 1894, Iaeger, one of the appellees, verbally and in writing notified Ritter, the appellant, that he claimed a part of the land the timber from which the land company had undertaken to sell, and forbade him to cut any timber on it. Subsequently the appellees brought their action of ejectment against the trustees of the Elkhorn & Sandy River Land Trust, and a number of other parties, claiming that they were owners of a tract of land of 150,000 acres, granted to Robert Pollard, by patent dated 20th March, 1795, and held by

Digitized by Google

them by virtue of sundry mesne conveyances, and that the defendants were trespassing thereon. After said suit was instituted, a bill was filed in the circuit court of the United States for the district of West Virginia, on 22d July, 1895, praying an injunction against the defendants in the ejectment suit, restraining them from cutting timber on the lands claimed by plaintiffs in said suit, which injunction was granted. Ritter was not a party eo nomine in these suits. An action of ejectment was then brought against Ritter and a large number of other persons, by the appellees, on 18th September, 1895, and, on 30th December following, a bill was filed praying a similar injunction against Ritter, and a preliminary injunction was granted, with a rule to show cause why it be not made permanent. Ritter applied to the court to dissolve and annul this injunction, or, if the court refuse to dissolve the same absolutely, then to dissolve the same upon allowing the defendant, Ritter, to give such bond or security as the court may deem proper for the protection of such rights and interests as plaintiffs may have in the subject of litigation, or, if this be refused, then to modify the injunction to such extent as the defendant may show himself entitled to. The court refused to dissolve the injunction, either absolutely or on terms, or to modify it in any way. 72 Fed. 1000. This is assigned as error, and the case comes here under this assignment.

The appellant in the court below based his application for the dissolution of the injunction on two grounds: First. That he had been misled by Mr. Strother, the attorney at law and in fact of one of the appellants, who had advised him to go on cutting the timber. This is denied positively by Mr. Strother. Such conduct on the part of an attorney, who was at the time actively asserting the rights of his principal, is, to say the least, improbable. The judge below solved the matter on the denial of Mr. Strother. It is to be presumed that he knew the persons. We will not disturb his conclusion. Second. Ritter, in his motion, relied upon the delay of the complainants in applying for an injunction for so long a time while they knew, or had the means of knowing, that he was cutting timber, and he contends that this shows acquiescence on their part in his acts. In order to constitute the estoppel, or quasi estoppel, by acquiescence, the party, with full knowledge or notice of his rights, must freely do what amounts to a recognition of the transaction, or must act in a manner inconsistent with its repudiation, or must lie by for a considerable time, and knowingly permit the other party to deal with the subject-matter under the belief that the transaction has been recognized, or must abstain for a considerable time from impeaching it, so that the other party may reasonably suppose that it is recognized. Pom. Eq. Jur. § 965; Simmons v. Railway Co., 159 U. S., at page 291, 16 Sup. Ct. 1. But it appears in the record that at the very beginning of his enterprise, even before the date of his contract with his vendors, Ritter had prompt and decided notification from complainants not to go on these lands, and not to cut the timber, which notification was repeated to him in person, followed up by suit in ejectment and by

Digitized by Google

bill for injunction against his vendors and against himself. There was no standing by and permitting him to invest capital, settle plant, and spend money, without objection or protest. There was prompt notice and objection, and whatever he did after that was at his own peril. The complainants had a right to expect that their notice and remonstrance would bring fruit, and, when they discovered that, notwithstanding these, he persisted in the acts they deemed unlawful, they invoked the assistance of the law court and the preventive process of the court of equity long before, under the statute of limitation, their right would be barred. They cannot be charged with acquiescence.

But is it contended that the court erred in not dissolving the injunction on terms, and in not permitting the appellant to give bond for the timber he should cut pendente lite? The granting or the refusal of an injunction rests in the sound discretion of the court. Poor v. Carleton, Fed. Cas. No. 11,272. It is a power requiring great caution, deliberation, and sound discretion, and involves responsibility. The right set up must be clear, the injury must be impending, and so threatened that it can be averted only by the preventive process of the court. The judge who granted this injunction has had great and unusual experience. He was possessed of all the facts of the case, and of the peculiar circumstances surrounding it. His exercise of his discretion, no doubt, was the result of calm deliberation. It could only be set aside for manifest error in the conclusion he reached. He concluded, as a matter of fact, with all the affidavits filed in the case before him, that the land in dispute here were chiefly valuable for the timber upon it; that cutting the timber would naturally destroy its chief value; that not only was the timber in itself specially valuable, but that it was necessary to utilize and develop whatever coal there was in the land. Under this conviction, he determined to preserve the status quo. We are not prepared to say that he erred.

The decree of the circuit court is affirmed.

(78 Fed. 225.)

CENTRAL TRUST CO. v. CARTER et al.

(Circuit Court of Appeals, Fifth Circuit. December 15, 1896.)

No. 525.

1. RAILROAD REORGANIZATION AGREEMENT—REORGANIZATION COMMITTEE'S AUTHORITY.
The holders of the bonds of an insolvent railway company entered into a trust agreement with certain persons, constituting a reorganization committee, and a trust company, by which such reorganization committee was authorized, in very broad terms, to procure the sale of the railway; to adjust, by arbitration or otherwise, the rights of a construction company which had contracted to build the road; to negotiate and compound with holders of claims against the railway, and provide for payment thereof; and to borrow money, and pledge as security the bonds deposited under the agreement. This committee entered into an agreement with certain parties holding claims against the railway company and the construction company, some of whom had obtained

Digitized by Google

judgments declaring contractors' liens in their favor against the railway company, by which agreement these claims were assigned to the committee, and certain securities of the railway company, held by the construction company, were released, in consideration of the promise of the committee to deliver to such claimants negotiable certificates for certain sums, payable in cash, and secured by the bonds deposited with the committee. The claimants performed their part under this agreement, but the committee never delivered the certificates. Subsequently the railway was sold under foreclosure, and the court decreed, upon an intervening petition by the claimants who had assigned their claims to the committee, that they were entitled to be paid the amount of the promised certificates out of the proceeds of sale applicable to the payment of the bondholders, from which decree the trustee for the bondholders appealed. *Held*, that the agreement made with the claimants, who had at least apparent rights against the railway, was within the authority of the committee, and, though the certificates were never delivered, such agreement should be treated as a mortgage on the bonds, and the claimants were entitled to be paid out of the proceeds of the sale.

2. SAME—FUND IN COURT—INTERVENING PETITION.

Held, further, that the possession by the court in which the foreclosure suit was pending of the fund applicable to the payment of the bonds was sufficient to authorize it to entertain the petition of the claimants asserting a mortgage lien upon such bonds.[1]

Appeal from the Circuit Court of the United States for the Northern District of Georgia.

An original bill was filed by appellant in the circuit court against the Chattanooga Southern Railway Company for the appointment of a receiver, and to foreclose a mortgage executed by the railway company to secure certain bonds by it issued. An order was duly made by the court consolidating that cause with the suit of E. Summerfield against the railway company. On the 18th day of September, 1892, a decree was passed foreclosing the mortgage, and ordering a sale of the property. Sale was made by the special commissioner February 14, 1895, which was confirmed by the court March 16, 1895, in the following decree:

"Decree Confirming Sale, and Ordering Conveyance and Possession.

"It appearing to the court by the report of Joseph W. Burke, special commissioner to make the sale of the above-stated railway, that he did, on the 14th day of February, 1895, at Gadsden, in Etowah county, state of Alabama, expose for sale the said Chattanooga Southern Railway, with all its rights, properties, appurtenances, and franchises, and that the same was purchased by the reorganization committee of said railway, as the purchasing committee, to wit, H. A. V. Post (chairman), Russell Sage, Thomas H. Hubbard, Henry L. Lamb, and Newman Erb, at and for the price of four hundred thousand dollars, subject, however, as recited in said decree under which said sale was made, to certain preferential liens and claims, and to all and singular the terms and conditions in said decree set forth; and it further appearing that said purchasers have made the payment of fifty thousand dollars, in cash, to said Joseph W. Burke, special commissioner, as provided in said decree; and it being shown to the satisfaction of the court that the statements in the report of said special commissioner of the sale of said property are true, and no objections being made to the confirmation of said report: It is therefore considered, ordered, and decreed by the court, on motion of counsel for complainant, Central Trust Company of New York, that the said report of said special commissioner be, and the same is, in all respects confirmed, and the sale made by him on said 14th day of February, 1895, to said H. A. V. Post (chairman), Russell Sage, Thomas H. Hubbard, Henry L. Lamb, and Newman Erb, the purchasing committee, as joint tenants, and not tenants in common, of all and singular the railway, equipment, property, and franchises of the Chattanooga Southern Railway Company, as described in and by the decree of foreclosure entered in this cause on the 18th day of September, 1892, at

[1] The cases involving questions of jurisdiction, as affected by possession of the subject-matter of controversy, are collected in a note to Adams v. Trust Co., 15 C. C. A. 6.

Digitized by Google

and for the sum of four hundred thousand dollars ($400,000), by said purchasing committee bid, be, and the same is in all things ratified, approved, confirmed, and made absolute; subject, however, to all the receiver's debts, preferential claims, and equities reserved, and to all and singular the conditions of purchase as recited in said decree, and the continued right of this court to adjudge and declare what receiver's or corporate debts are prior in lien or in equity to the lien of the mortgage herein foreclosed, or ought to be paid out of such proceeds of sale in preference to the bonds issued under said mortgage, including the claims set up by the intervention of Carter & Rogan and others, or of the holders of certificates issued under the contract exhibited thereto, if hereafter so adjudged by the court. * * * It is further ordered, adjudged, and decreed that the special commissioner, Joseph W. Burke, be, and he is hereby, authorized and directed, on request of said purchasers, to sign, seal, execute, acknowledge, and deliver a proper deed or deeds of conveyance to the said purchasing committee, or their nominee, conveying all and singular the railway, equipment, property, and franchises of the said Chattanooga Southern Railway within the states of Tennessee, Georgia, Alabama, and all property, rights, and franchises that the said Joseph W. Burke, as receiver of said Chattanooga Southern Railway Company, has acquired during the time of his receivership, free from any equity of redemption of the said Chattanooga Southern Railway Company, or any party to this suit, or any one claiming by, under, or through the said Chattanooga Southern Railway Company, or any party to this suit. The court reserves full power, notwithstanding such conveyance and delivery of possession, to retake and resell said property this day confirmed to said purchasers, if they fail or neglect fully to complete such purchase and comply with the orders of this court in respect to full payment and performance of their said bid, or to pay into court, in accordance with such decree of sale, all such sums of money hereafter ordered by this court to be paid into its registry to discharge any and all such debts, liens, or claims as the court may adjudge and decree ought to be paid out of the proceeds of sale in preference to the bonds secured by the mortgage of the Chattanooga Southern Railway Company herein foreclosed.

"In open court this 16th March, 1895."

The Chattanooga Construction Company of West Virginia entered into a contract with the railway company for the construction of the road, and, not being paid by the railway company for work and labor performed and materials furnished in the progress of the work of construction, filed its petition of intervention in the consolidated causes, by which it sought to recover against the railway company the sum of $328,518.23. This intervention is still pending, undetermined, in the circuit court. Appellees, as contractors, constructed a portion of the road, and, being unable to collect the amount due them for work and labor done and materials furnished, filed their suit against both the railway company and the construction company to recover the same, in the superior court of Walker county, Georgia; and judgment was duly rendered in their favor, November 24, 1892, for the principal sum of $34,818.60, and interest for $3,078.25 to the date of judgment. A contractor's lien was decreed to exist against the property of the railway company, including the railway, and the same was ordered sold to satisfy the judgment. On being informed of the pendency of the foreclosure suit in the United States court, the judge of the superior court of Walker county ordered a suspension of further proceedings, and the sale did not take place as originally ordered. On or about November 26, 1892, the Merchants' National Bank of Chattanooga, appellees, et al., filed a bill in the United States circuit court for the Eastern district of Tennessee, at Chattanooga, against the construction company, for the appointment of a receiver; for an accounting and ascertainment of the debts of the construction company, and the marshaling of its assets. In the suit a receiver was appointed on the 30th day of December following. There appears in the record an instrument, entitled "Trust Agreement," bearing date February 1, 1892, to which the holders of the first mortgage bonds of the Chattanooga Southern Railway Company, the Atlantic Trust Company, and H. A. V. Post, Russell Sage, and associates are parties. By this trust agreement, Post, Sage, and associates were nominated and constituted a reorganization committee. The Atlantic Trust Company was designated as a depositary to take charge of all bonds deposited with it by the bondholders; the bonds to be held by the depositary for the use, and subject to the orders, of the reorganization com-

Digitized by Google

mittee. When the reorganization committee made the contract with appellees hereinafter set forth, on, to wit, February 17, 1893, there was on deposit with the Atlantic Trust Company, subject to the order of the committee, $819,000 principal, par value, of the first mortgage bonds of the railway company, secured by mortgage executed to the appellant as trustee. In December, 1894, the Mercantile Trust Company became the successor of the Atlantic Trust Company, receiving the bonds theretofore deposited with the latter. On February 14, 1895, the day the road was sold by order of the court, there was on deposit with the Mercantile Trust Company $1,418,000 principal, par value, of such bonds; and on February 17, 1896, the entire issue of bonds, to wit, $1,440,000, was on deposit with said trust company, subject to the order of the committee. Pending the litigation in the United States circuit court at Chattanooga, the reorganization committee entered into the following contract with the Merchants' National Bank, appellees, and others, for the adjustment and settlement of their respective claims:

" * * * This agreement, made and entered into on this February 17, 1893, by and between T. B. Redmond, J. B. Carter, R. M. Rogan, partners under the firm name and style of Carter & Rogan, and Dun, Armstrong & Co., of the one part, who hold claims and liens on the property of the Chattanooga Southern Railway and the Chattanooga Construction Company of West Virginia for work and labor done and material furnished in the building and construction of the said railroad, said parties of the first part to this agreement, hereafter called 'Contractors,' and the reorganization committee of the Chattanooga Southern Railway, composed of H. A. V. Post, Russell Sage, Henry L. Lamb, Walter Stanton, and Newman Erb, parties of the second part, hereafter called 'Committee,' witnesseth:

"First. The parties of the first part hereby severally sell, transfer, and assign, for the consideration herein named, to the aforesaid committee, all their debts, claims, demands, equities, liens, and remedies now held and owned by them, or either of them, in law or equity, against the Chattanooga Southern Railway and the Chattanooga Construction Company of West Virginia, or either of them, and the claims to be transferred free from all claims for attorney's fees; and the assignee has the right to use the name of the assignor in bringing any suit or suits in any court to enforce the payment of the several debts assigned, or the liens thereto attaching, but the assignee will assume all the cost of such suit or suits. The committee assume the payment of all the court costs heretofore incurred by the contractors in enforcing said demands. The assignments are made without recourse on the contractors. The claims hereby assigned are as follows:

T. B. Redmond, debt and interest to February 17, 1893, sued on in superior court of Walker county, Ga.:	
Principal	$26,019 34
Interest to February 17, 1893	2,368 59
Total	$28,387 93
Carter & Rogan, judgment Walker county superior court, dated November 24, 1892, with interest to Feb. 17, 1893	$38,430 20
Carter & Rogan for S. H. Flowers' account	$ 309 21
Interest to February 17, 1893	18 00
	$ 327 21
Dun, Armstrong & Co., notes and accounts, with interest from Feb. 17, 1893	$13,072 58
Dun, Armstrong & Co., for D. W. Liddell, subcontractor	$ 3,986 27
Interest from April 24, 1891, to February 17, 1893, at 8% (Alabama rate)	563 75
Total	$ 4,550 02
J. E. Moore, notes	$ 936 20
Interest from February 11, 1891, to February 17, 1893, at 8 per cent.	154 04
	$ 1,090 24

Digitized by Google

J. M. Langston, notes May 24, 1891	$ 378 40
Interest to February 17, 1893	52 33
Total	$ 430 73

"And the parties of the first part agree to make any other and further transfer and assignment of said claims which may be required by the committee, so as to fully invest in said committee title to said claims, and to deliver over to said committee notes and other evidences of said indebtedness hereby transferred and assigned, as hereafter provided.

"Second. A decree has been drafted in the case of the Merchants' National Bank v. The Chattanooga Construction Company of W. Va., which is signed and assented to, and will be entered on the records as of this date.

"Third. The party of the second part, in payment for the claims hereinbefore transferred, agrees to issue to said parties of the first part, respectively, negotiable certificates, payable in cash, for one-half in amount of said debts, principal and interest, so transferred,—said certificates to be issued by said committee, and payable within sixty days after decree is entered in the United States circuit court at Atlanta confirming the sale of the Chattanooga Southern Railway, and payable not later than December 1st, 1893, in any event, and to bear six per cent. interest per annum from this date; and said certificates shall recite that they are secured by the bonds and other securities deposited with said reorganization committee, and held by the Atlantic Trust Company of New York, and shall be countersigned by the said trust company. The said committee also agrees to issue to said parties of the first part, respectively, other negotiable certificates for the other one-half in amount of said debts so transferred; said certificates to entitle the holders thereof to the same securities, pro rata, as the depositors of first mortgage bonds of the Chattanooga Southern Railway with said committee are or shall be entitled to under the agreement by which said bonds were deposited with said committee; said certificates to be also countersigned by said Atlantic Trust Company.

"Fourth. The certificates above provided for shall be delivered to J. H. Barr and Foster V. Brown, as trustees, and be delivered to the first parties herein only when and as the notes and other evidences of the debts hereinbefore transferred are delivered over to said trustees for said committee. Said certificates shall be issued to said trustees, and in such amounts, as the said several contractors shall direct, and be delivered by the said trustees to such persons as the contractors may direct. * * *"

The bank, appellees, and their associates performed in good faith their part of the contract, as appears by the following order of court, which directed the receiver of the construction company to make a formal assignment of its claims against the railway company to the committee:

"Merchants' National Bank et al. vs. Chattanooga Construction Company.

"In this case, it being made to appear to the court that the claims sued on in this case have been transferred and assigned by complainants to the reorganization committee of the Chattanooga Southern Railway (said committee known as the 'Post Committee'), and that this assignment was made by and with the consent of the defendant, and in the assumption by the said reorganization committee of the debts sued on in this cause, and certain other debts of said construction company, and as part consideration for said assumption the complainant and defendant have agreed that all claims of defendant, of whatever nature, kind, and character, owned by it against the Chattanooga Southern Railway for the building of the Chattanooga Southern Railway, equipping it, or on any other account whatever, as well as any and all equity it may or might own in any of the bonds of the Chattanooga Southern Railway, should be assigned to said reorganization committee, and it appearing to the court that this is a proper arrangement to be made: It is therefore decreed by the court, all parties agreeing thereto, that the receiver of the Chattanooga Construction Company of West Virginia be, and he is hereby, authorized and directed to make a formal assignment of said claims above referred to, conveying to said committee all the rights and claims of said company in and to said assets of the defendant company. The costs of this cause will be paid by the defendant company, and the receiver is allowed for his services and that of his attorney the sum of $500, to be taxed as a part of the costs

Digitized by Google

of the cause, which amounts have been paid, and the suit dismissed and stricken from the docket."

In compliance with the order of court, the receiver assigned the claims of the construction company to the committee, and the latter accepted the assignment, and received the assets of the construction company, including 74 bonds, of the denomination of $1,000 each, of the railway company. The reorganization committee failed to deliver to appellees, as contemplated by its agreement, a negotiable certificate for one-half of their indebtedness; and, to enforce the payment of their claim, they filed a petition in intervention in the consolidated causes, praying that they be ordered to be paid out of the proceeds of the sale of the railway, before the payment of the bonds of the railway company, the sum of $19,378.81, with interest. The reorganization committee and appellant were made parties to the proceeding, and a copy of the petition was served upon their respective counsel. The committee appeared specially for the purpose of filing a motion to dismiss the intervention for want of jurisdiction. Appellant interposed a demurrer to the petition, and also answered. The petition of appellees and answer of appellant were referred by the court to W. P. Hill, Esq., special master, who reported in favor of the allowance of appellees' claims. The report concludes as follows: "I find that the proceeds of the sale of this road which would go, after the payment of the expenses of the receivership and other debts already adjudged preferential, to the bondholders, is equitably charged with the payment of interveners' claim, to wit, the sum of $19,378.70, with interest at 6% from February 17, 1893; this being one-half of the debt." The report of the master was excepted to by appellant, and the exceptions, together with the demurrer of appellant to the petition in intervention, and the motion of the reorganization committee to dismiss the same, were overruled by the court, and the report confirmed, on the 18th day of June, 1896. The confirmatory order concludes: "It is further ordered that, out of the proceeds of the sale of said railway applicable to the bonds of said railway company, the said John B. Carter and R. M. Rogan, as partners under the firm name of Carter & Rogan, do recover and be paid the sum of nineteen thousand three hundred and seventy-eight dollars and seventy cents ($19,378.70), as principal, with interest from February 17, 1893, thereon, at the rate of six per cent. per annum, and all costs of this proceeding, and that the same be paid into court for the use of said interveners by the purchasers of said railway, in conformity with the order confirming the sale of said railway, within twenty days from this date, and that in default thereof said interveners may apply to the court for relief, as provided in said order of confirmation. The costs are adjudged against the respondents in said intervention."

From this decree the Central Trust Company alone prosecutes an appeal.

H. B. Tompkins and R. C. Alston, for appellant.

Alex. C. King and J. J. Spalding, for appellees.

Before PARDEE and McCORMICK, Circuit Judges, and MAXEY, District Judge.

MAXEY, District Judge, after stating the case, delivered the opinion of the court.

This appeal brings up for review the decree rendered by the circuit court sustaining the master's report, and ordering the payment of appellees' claim out of funds required to be paid into court by the purchasers of the railway. Appellant contends that the reorganization committee was without power to make with appellees the contract of February 17, 1893, and hence the latter are not entitled to the payment of their claim out of the proceeds of the sale of the railway. The reorganization committee had only such power to contract with appellees as was conferred upon it by the trust agreement of February 1, 1892, and appellees, in dealing with the committee, were chargeable with notice of the terms and provisions of that agreement. To the trust agreement there were three parties,—the

Digitized by Google

holders of the first mortgage bonds of the Chattanooga Southern Railway Company; Post, Sage and others, constituting the reorganization committee; and the Atlantic Trust Company of New York. The first paragraph of the agreement makes each holder of any of the bonds who shall deposit them with the Atlantic Trust Company a party to the agreement, and by the twenty-third paragraph it is provided:

"The deposit of securities, and receipt of certificates issued therefor, shall have the same effect as if the holders of such certificates had actually subscribed to this agreement."

The holders of all bonds issued by the railway company, amounting to $1,440,000, had, prior to the decree complained of, deposited their securities with the Mercantile Trust Company, which had become the successor of the Atlantic Trust Company; and they thus became, by the terms of the first and twenty-third paragraphs, above referred to, parties to the trust agreement. Any contract, therefore, entered into by the reorganization committee in the execution of its trust, and within the scope of its delegated authority, became valid and binding upon the bondholders, upon the familiar principle that the acts of an agent, done and performed within the scope of his agency, bind the principal. Did the committee exceed its authority in negotiating with appellees? An inspection of the trust agreement will disclose the comprehensive powers with which the reorganization committee was invested. It was authorized to procure, by any and all legal means, the sale of the railway, and to assist in the prosecution of, and become a party to, all suits instituted for that purpose; to purchase, as joint tenants for and in behalf of the bondholders, the property, at any sale made under a decree of foreclosure, at a price within its own discretion. The Atlantic Trust Company was instructed by the terms of the agreement to hold the bonds deposited with it, subject to the order and discretion of the committee, or to dispose of the bonds as the committee might direct. The latter was authorized to designate one or more of its members, or any other person, to attend any judicial sale, and bid off the property, and was generally empowered to employ such agents or attorneys as it might deem necessary and proper. In the event of a purchase of the railway, the committee was authorized to take possession of the property and operate it until a new company should be formed, and full power was conferred upon it to do all acts and things necessary and proper, in its judgment, to execute the provisions of the trust agreement. The committee was further empowered to carry out the plan of reorganization without foreclosure, if it could be lawfully done. Paragraphs 15 and 16 of the agreement are as follows:

"(15) The relations and rights of contractors and of the Chattanooga Construction Company are to be determined by a court or courts of competent jurisdiction, or by the assent of the said parties of the second part, or by arbitration, as the said parties of the second part may determine; and the said parties of the second part are hereby authorized and empowered to negotiate and compound with the holders of claims against the said railway, and to make due provision for the payment and adjustment of the same, upon such terms as they shall find to be reasonable and proper, to the end that the said corporation shall be free and clear

Digitized by Google

from the obligations thereof. (16) The parties of the second part shall have power to borrow such money, not exceeding twenty per cent. of the par value of bonds and coupons deposited hereunder, as may be necessary for the carrying out of this agreement, and, as security for the payment of such money, to pledge the said bonds and coupons deposited hereunder, and to contract for the extension of the time of the payment of such loans from time to time."

The powers conferred upon the committee appear to be as ample and comprehensive as language can make them. Armed with such authority, the committee entered into the compromise agreement of February 17, 1893, by the terms of which appellees and others agreed to transfer and assign to it the claims, which they, respectively, held against the railway company and the Chattanooga Construction Company; that of appellees being in the form of a judgment recovered by them in the superior court of Walker county, Ga. The agreement not only embraced a settlement of the claims of the individuals subscribing it, but further contemplated and provided for the assignment to the committee of the claims held by the Chattanooga Construction Company against the railway company. In consideration of the settlement, and transfer to the committee of the evidences of indebtedness held by the parties, the committee agreed to issue to appellees, in payment of that part of their claim involved in this suit, a negotiable certificate, payable in cash. This method of payment was expressly authorized by the following clause of the agreement:

"Third. The party of the second part, in payment for the claims hereinbefore transferred, agree to issue to said parties of the first part, respectively, negotiable certificates, payable in cash, for one-half in amount of said debts, principal and interest, so transferred,—said certificates to be issued by said committee, and payable within sixty days after decree is entered in the United States circuit court at Atlanta confirming the sale of the Chattanooga Southern Railway, and payable not later than December 1st, 1893, in any event, and to bear six per cent. interest per annum from this date; and said certificates shall recite that they are secured by the bonds and other securities deposited with said reorganization committee, and held by the Atlantic Trust Company of New York, and shall be countersigned by the said trust company."

Agreeably to the stipulation of the parties, the claims were duly assigned to the committee. Appellees completely performed their part of the contract, and, notwithstanding the acceptance by the committee of the claims so assigned to it, there was an utter failure on its part to issue to appellees the negotiable cash certificate required by the terms of the agreement. The committee is passive, and not complaining of the decree. But the contention is advanced by appellant that the committee, in negotiating with appellees, exceeded its authority, and its acts are therefore not binding upon the bondholders. Appellant insists that the authority of the committee was limited to the settlement of claims against the railway company, and only such as were entitled to priority of payment over the bondholders. And it maintains that the claim of appellees was against the Chattanooga Construction Company, and that such a demand, although for work done and materials furnished in the construction of the railway, did not operate as a lien upon the property of the railway company. Whether appellees, as contractors, in their effort to fix a lien upon the railway, conformed to

Digitized by Google

the requirements of the Georgia laws, and whether the judgment recovered by them in the superior court of Walker county, Ga., may be held to be a lien superior or inferior in rank to that of the mortgage under which the bondholders claim, are questions which we do not deem it necessary to determine. It is nevertheless true that the judgment, upon its face, recites the existence of a contractor's special lien upon the road and other property of the Chattanooga Southern Railway Company, and that the court ordered a sale of the property to satisfy the decree. Hence the question of the existence of the lien was necessarily involved in some doubt and obscurity, the solution of which was remitted to the judgment and determination of the reorganization committee, by the terms of its power of appointment. The settlement with appellees might therefore be easily sustained on the ground that the discretion vested in the committee justified it in the compromise of a claim of doubtful validity. Market Co. v. Kelly, 113 U. S. 199, 5 Sup. Ct. 422; Llano Imp. & Furnace Co. v. Pacific Imp. Co., 13 C. C. A. 625, 66 Fed. 526; Brooks v. Dick, 135 N. Y. 652, 32 N. E. 230. The authority with which the committee was clothed in reference to all matters touching the settlement of claims against the railway company, and in perfecting the scheme of reorganization, was practically unlimited; and why the authority should not embrace within its scope the settlement of appellees' indebtedness, we are at a loss to understand. The answer of appellant to the intervening petition of appellees contains no charge or intimation of fraud or bad faith on the part either of the committee or appellees, and the settlement effected, being plainly within the limit of the authority delegated to the committee, should not be disturbed.

In the contract of settlement with appellees, as already stated, the committee agreed to issue them a certificate, payable in cash, for one-half of their indebtedness, and, further, that such certificate should recite that it was secured by the bonds and securities deposited with the committee. The certificate not being issued to appellees as required by the agreement, upon well-recognized and established equitable principles the agreement should be upheld and enforced as a mortgage upon the bonds. Thus, in Morrow v. Turney's Adm'r, it is said by Mr. Chief Justice Walker, as the organ of the court:

"The bill shows that there was an agreement; and if it was an agreement to give a mortgage, predicated upon the consideration of a debt contracted on the faith of the agreement, it will be upheld and enforced, between the parties and their representatives, as a mortgage, upon the principle that equity will consider that as done which ought to have been done." 35 Ala. 137; Glover v. McGilvray, 63 Ala. 508; Riddle v. Norris, 46 Mo. App. 512; Riddle v. Hudgins, 7 C. C. A. 335, 58 Fed. 490; 13 Am. & Eng. Enc. Law, p. 608; 1 Jones, Liens, § 27.

The only question remaining for consideration is whether the court erred in entertaining the intervening petition of appellees, and decreeing payment of their claim out of the proceeds of the sale of the railway. It will be observed that when the petition was filed the original foreclosure suit was pending in the circuit

Digitized by Google

court. That court had foreclosed the mortgage, and decreed the sale of the railway, and was, at the time the master's report was confirmed, engaged in administering the fund arising from the sale. Appellees were claiming a mortgage lien on the bonds, and the holders of those bonds were entitled to the proceeds of the sale of the road, after the payment of preferential claims. The claim of appellees should be held to constitute an equitable charge upon so much of the proceeds of sale as was directed by the court to be ultimately distributed among the holders of bonds. And what court was more competent than that to adjust and settle the conflicting claims to the fund in its custody? "It is well settled," says the supreme court, "that, where property is in the actual possession of a court, this draws to it the right to decide upon conflicting claims to its ultimate possession and control (Minnesota Co. v. St. Paul Co., 2 Wall. 609; Morgan's L. & T. R. & S. S. Co. v. Texas Cent. Ry. Co., 137 U. S. 171, 201, 11 Sup. Ct. 61), and that, when assets are in the course of administration, all persons entitled to participate may come in, under the jurisdiction acquired between the original parties, by ancillary or supplemental proceedings, even though jurisdiction would be lacking if such proceedings had been originally and independently prosecuted." Rouse v. Letcher, 156 U. S. 49, 50, 15 Sup. Ct. 266; Williams v. Morgan, 111 U. S. 684, 4 Sup. Ct. 638. We find no error in the decree of the circuit court, and it is therefore affirmed.

(78 Fed. 233.)

KING v. BUSKIRK et al.

(Circuit Court of Appeals, Fourth Circuit. February 2, 1897.)

No. 172.

DISSOLUTION OF INJUNCTION—JUDGMENT AT LAW FOR DEFENDANT.

When, upon a bill in equity filed as ancillary to an action of ejectment, a preliminary injunction has been granted restraining the defendant from cutting timber upon the land in controversy, for the purpose of preserving the status quo pending the litigation, and a verdict and judgment are afterwards rendered for the defendant in the action of ejectment, it is proper for the court, in the exercise of its discretion, upon being informed of such verdict and judgment, to dissolve the injunction.

Appeal from the Circuit Court of the United States for the District of West Virginia.

Maynard F. Stiles, for appellant.

Z. T. Vinson, for appellees.

Before SIMONTON, Circuit Judge, and MORRIS and BRAWLEY, District Judges.

SIMONTON, Circuit Judge. This case comes up by appeal from the circuit court of the United States for the district of West Virginia. In March, 1895, the present appellant brought his action of

Digitized by Google

ejectment against a number of persons, among them the appellees, Buskirk and Mullins. As ancillary to this suit, the appellant, on the 31st May, 1895, filed his bill against these two defendants, claiming ownership in a tract of 500,000 acres; that the defendants were setting up title to a part of this land under deeds arising from sales alleged to be fraudulent; and that they were preparing to cut off the timber on said lands, which were chiefly valuable because of this timber. The bill prayed an injunction pendente lite. Answers having been filed, the cause was heard on the motion for injunction. The injunction was granted, and an appeal therefrom taken to this court, which affirmed the decree of the circuit court, February 4, 1896. Buskirk v. King, 18 C. C. A. 418, 72 Fed. 22. On 31st December, 1895, the appellant filed another bill in equity, in the circuit court of the United States for the district of West Virginia, against these same defendants, and impleaded with them Lorenzo D. Chambers and Margaret L. Chambers. In this bill he set up his title to the said 500,000-acre tract; charged that the defendants had by fraudulent acts of Chambers, commissioner of school lands, become possessed of a pretended title to part of said lands, and that the merchantable timber was being cut therefrom; that an action of ejectment had been brought by him against said defendants; and that complainant had obtained an injunction against the cutting of the timber on a part of said lands; and prayed an injunction against the defendants as to the rest of the land claimed by them. Upon the filing of this bill, a temporary injunction was granted as prayed for. On 26th February, 1896, the two causes above referred to were consolidated. The action of ejectment to which these suits in equity were ancillary came on to be tried before a jury on 14th January, 1896. The defendant Mullins and two others having severed their defense from the other defendants, the issue was made as to them; and on 30th January, 1896, the jury, under instructions of the court, found a verdict for the defendants. On 27th February of the same year, Mullins and Buskirk, in the consolidated equity cases, filed what is called a "plea," verified by affidavit, in which was stated the fact of the trial of the action of ejectment and its result in the instruction of the court to the jury to find for the defendants, and that judgment was entered thereon on 27th February, 1896, and the further fact that the land in said ejectment suit sought to be recovered from the said defendants is the same land mentioned and described in the bills praying for injunction, and, on that state of facts, praying the judgment of the court, whether they should be called upon further to answer the bill. Thereupon the court dissolved the injunction. A modification of the order was subsequently made, but not in any way affecting the purport of the order dissolving the injunction. Thereupon an appeal was taken to this court upon the several assignments of error set out in the record. It is not necessary to discuss these in detail.

The granting of an injunction on a bill filed ancillary to an action of ejectment is a departure from the ancient practice in equity. Pillsworth v. Hopton, 6 Ves. 51; Norway v. Rowe, 19 Ves. 147. It is the product of modern practice. It is not a matter of absolute

Digitized by Google

right, nor does such an injunction issue as a matter of course. There must appear prima facie a title in the complainant; and there must also appear danger of irreparable injury, such injury as cannot be compensated in money. Nor must the court look only to the injury threatened the complainant. It must also consider the interests of the defendants. "There is no power, the exercise of which is more delicate, which requires greater caution, deliberation, and sound discretion, or more dangerous in a doubtful case, than the issuing of an injunction. * * * The right must be clear; the injury impending and threatened, so as to be averted only by the protecting preventive process of injunction." Truly v. Wanzer, 5 How. 142, 143. It is for the chancellor to say, after an examination of the claim of title in the complainant, whether the showing prima facie is such as to render it proper to preserve the status quo. Poor v. Carleton, Fed. Cas. No. 11,272. When such an injunction is granted, it goes upon the idea that the property should be preserved until one or the other of the parties shows the best title to it, and to prevent irreparable mischief. But if it be made to appear to the chancellor, after injunction granted, that the injury is not of the irreparable character alleged, or that compensation may be afforded in damages, or that the title set up by complainant is not good, and that such has been the verdict of a jury, there can be no reason why the injunction should not be dissolved. See Russell v. Farley, 105 U. S., at pages 441, 442. If the bare fact that a party sets up a claim to land will entitle him to an injunction against the party in possession, restraining him from all use whatever of it, pending a long and expensive litigation, irreparable injury may be done to defendants in such a suit. Take the case of a person who has gone into quiet possession of land under what seems a good title, and who has expended sums of money in its use and improvement. Has he less claim on the protection of the court than one who sets up an old claim, long dormant, and seeks to oust him? And if the chancellor has been judicially satisfied that the title set up by the complainant is not a good title, or that the great preponderance of probability is with the party in possession, must he, nevertheless, keep the defendant out of its enjoyment?

In the case at bar, action of ejectment was tried before the judge who heard the motion to dissolve the injunction. He knew the full merit of the complainant's title, and, after hearing it, he instructed the jury to find for the defendant. The so-called "plea" simply put the facts before him in regular form,—the fact that a jury had heard the case at law, and, under the instructions of the court, had found the title of the plaintiff in ejectment invalid. It must not be treated as a formal plea. It was more in the nature of an affidavit on which is based a motion to dissolve an injunction. Under these circumstances, the court exercised its discretion, and, to prevent irreparable mischief to the defendants, dissolved the injunction. No other action was taken on the so-called "plea." The cause is still pending. No error is perceived in this.

The appellant was allowed a supersedeas bond, with provision, however, that the defendant, by giving bond, could continue his cut-

Digitized by Google

ting of timber notwithstanding the supersedeas. In this the court exercised its discretion. Both provisions of the order terminate with the promulgation of this opinion, and no practical result could now be reached if this court reviewed it. The decree of the circuit court is affirmed.

(78 Fed. 278.)

LOZANO et al. v. PALATINE INS. CO., Limited.

(Circuit Court of Appeals, Fifth Circuit. December 15, 1896.)

No. 478.

FIRE INSURANCE—STOCK OF GOODS—WARRANTIES AS TO KEEPING BOOKS, ETC.

Policies of insurance on a stock of goods consisted of a printed sheet containing the formal printed parts, and, attached thereto, a paper containing a description of the insured property, together with a "covenant and warranty" by the assured to keep, in a fireproof safe, or in some place not exposed to a fire which would destroy the building containing the goods, an inventory and account books containing a complete record of all business transacted. *Held*, that the covenant as to the keeping and method of preserving the inventory and books was a part of the policy, and constituted a warranty, the breach whereof prevented any recovery.

In Error to the Circuit Court of the United States for the Southern District of Florida.

This was an action at law by Lozano and others, constituting the firm of Lozano, Pendas & Co., against the Palatine Insurance Company, Limited, of Manchester, England, to recover upon two policies of fire insurance. The case was heard below upon demurrer to a plea in bar, and under a stipulation for final judgment on the decision thereof. The court overruled the demurrer, and entered judgment for defendant pursuant to the stipulation. Plaintiffs thereupon sued out this writ of error.

E. R. Gunby, S. M. Sparkman, M. G. Gibbons, and G. M. Sparkman, for plaintiffs in error.

A. W. Cockrell, A. W. Cockrell, Jr., and R. S. Cockrell, for defendant in error.

Before PARDEE and McCORMICK, Circuit Judges, and MAXEY, District Judge.

PARDEE, Circuit Judge. This is a suit to recover on two fire insurance policies, copies of which were filed with the declaration. The defendant insurance company filed a plea as follows:

"Now comes the defendant, by its attorneys, and for plea to the declaration herein says: The only contracts or agreements between the plaintiffs and defendant are evidenced by the two instruments in writing called policies, filed with the declaration. In and by said contracts under which the plaintiffs claim as aforesaid the plaintiff agreed that said contracts should become null and void in the event the plaintffs should fail to comply with a certain warranty set forth therein, and that such failure should constitute a perpetual bar to any recovery by the plaintiffs thereunder, the same being in each policy in the words and figures as follows: 'The following covenant and warranty is hereby made a part of this policy: (1) The assured will take a complete itemized inventory of stock on hand at least once in each calendar year, and, unless such inventory has been

Digitized by Google

taken within twelve calendar months prior to the date of this policy, one shall be taken in detail within thirty days from such date, or this policy shall be null and void from such date, and upon demand of the assured the unearned premium from such date shall be returned. (2) The assured will keep a set of books, which shall clearly and plainly present a complete record of business transacted, including all purchases, sales, and shipments, both for cash and for credit, from date of inventory, as provided for in first section in this clause, and during the continuance of this policy. (3) The assured will keep such books and inventory, and also the last preceding inventory, if such has been taken, securely locked in a fireproof safe at night and at all times when the building mentioned in this policy is not actually opened for business; or, failing in this, the assured will keep such books and inventories in some place not exposed to a fire which would destroy the aforesaid building. In the event of failure to produce such set of books and inventories for the inspection of this company, this policy shall become null and void, and such failure shall constitute a perpetual bar to any recovery thereon.' And the plaintiffs, therein called the assured, did fail to comply with said warranty in the several particulars hereinafter set forth; that is to say, that such books and inventories as were kept by the plaintiffs were not kept as aforesaid, in this: that at night, about 4 o'clock a. m., when said building was not open for business, and when said building was destroyed by fire, said books were in said building, and not in any safe, and were destroyed by fire; and that the said plaintiffs wholly failed to produce any books for the inspection of this company, the defendant aforesaid. And this the defendant is ready to verify."

To this plea the plaintiffs demurred on the following ground:

"That the alleged warranty or covenant of warranty set up in the pleas of the defendant, as the same appears in the policies of insurance made a part of the pleadings in this cause, and referred to in the defendant's pleas, does not constitute a warranty, and the failure of the plaintiffs to comply with the said alleged warranty does not constitute a bar to recover on said policies."

After filing the demurrer, the parties stipulated as follows:

"It is stipulated and agreed by and between the parties hereto, by their respective attorneys of record hereunto fully authorized, for the purpose of expediting this cause, and having a final determination of the real point at issue, that this cause shall be submitted finally upon the simple question whether or not the alleged breach of the so-called 'iron-safe clause' as it appears in the original policy filed with the declaration in this cause, and which policy is by agreement made a part of the pleadings, and as set up in the pleas demurred to, prevents a recovery by the plaintiffs; that upon the determination of this issue by the circuit court final judgment be entered accordingly; that thereupon the losing side may take the cause by usual appellate process to the United States circuit court of appeals, where said issue as aforesaid, and not otherwise, shall be submitted for final determination by said appellate court, and the judgment entered there upon the said issue, and thereupon the losing side shall have reasonable opportunity in due course of practice to have said issue determined by the United States supreme court; that, in the event of reversal and throughout the history of this cause, this issue shall be and remain the issue, and its final determination shall finally settle this cause. In the event of final determination and settlement in favor of the plaintiffs, the judgment shall be for the plaintiffs in the sum total stated in the estimates contained in the so-called 'proofs of loss' submitted by the plaintiffs to the defendant, without interest at the rate of 8 per cent. per annum from the sixtieth day next after the same were submitted, together with their taxed costs. And in the event such final determination shall be for the defendant, the judgment shall be, it go hence without delay, and recover of the plaintiffs its taxed costs."

The case having been submitted to the court below on the demurrer and the above stipulation, the court overruled the demurrer, and thereupon entered judgment in favor of the defendant.

The only error assigned in this court is that the court erred in overruling the plaintiffs' demurrer to the defendant's plea. The ar-

Digitized by Google

gument in this court has taken a very wide range, the principal points discussed being that the stipulation providing for the keeping and production of books was no part of the policy of insurance proper, and as attached to the policy it was not intended as a warranty. The original policies were produced for the court to see that the part containing the description of the property and the covenants with regard to keeping books was attached to the main sheet upon which the formal parts of the policy were printed. The policies sued upon and produced in court, although respectively made up on two pieces of paper attached together, really contained in each but one contract of insurance, all the parts of which were agreed upon and delivered at one time. Without the so-called "appended paper" containing the description of the property and the covenants as to keeping books, there would be, in fact, no policy of insurance on which a recovery could be had in a court of law.

There is no contention that the conditions with regard to keeping books and providing for their safety were complied with in any respect whatever, and the case-made shows the contrary. In Dwight v. Insurance Co., 103 N. Y. 341, 346, 8 N. E. 654, 655, it is said:

"Parties to an insurance contract have the right to insert such lawful stipulations and conditions therein as they may mutually agree upon, or which they may consider necessary and proper to protect their interests, and which, when made, must be construed and enforced like all other contracts according to the expressed understanding and intent of the parties making them. If an insurance policy, in plain and unambiguous language, makes the observance of an apparently immaterial requirement the condition of a valid contract, neither courts nor juries have the right to disregard it, or to construct, by implication or otherwise, a new contract in the place of that deliberately made by the parties."

In Imperial Fire Ins. Co. v. Coos County, 151 U. S. 452, 462, 14 Sup. Ct. 379, 381, Mr. Justice Jackson, for the court, says:

"Contracts of insurance are contracts of indemnity upon the terms and conditions specified in the policy or policies embodying the agreement of the parties. For a comparatively small consideration the insurer undertakes to guaranty the insured against loss or damage, upon the terms and conditions agreed upon, and upon no other; and, when called upon to pay, in case of loss, the insurer therefore may justly insist upon the fulfillment of these terms. If the insured cannot bring himself within the conditions of the policy, he is not entitled to recover for the loss. The terms of the policy constitute the measure of the insurer's liability, and, in order to recover, the insured must show himself within those terms; and if it appears that the contract has been terminated by the violation, on the part of the assured, of its conditions, then there can be no right of recovery. The compliance of the assured with the terms of the contract is a condition precedent to the right of recovery. If the assured had violated or failed to perform the conditions of the contract, and such violation or want of performance has not been waived by the insurer, then the assured cannot recover. It is immaterial to consider the reasons for the conditions or provisions on which the contract is made to terminate, or any other provision of the policy which has been accepted and agreed upon. It is enough that the parties have made certain terms conditions on which their contract shall continue or terminate. The courts may not make a contract for the parties. Their function and duty consist simply in enforcing and carrying out the one actually made."

The judgment of the circuit court is affirmed.

Digitized by Google

(78 Fed. 281.)

KAISER et al. v. FIRST NAT. BANK OF BRANDON.

(Circuit Court of Appeals, Fifth Circuit. December 8, 1896.)

No. 509.

1. NEGOTIABLE NOTES—BONA FIDE HOLDERS—NOTICE.
The fact that a purchaser, for valuable consideration, of negotiable notes, from a member of the payee firm, who claims to be the owner thereof, knows that the latter is the president of a bank whose indorsement in blank appears on the notes, after the indorsement of the firm, is not sufficient to put the purchaser on inquiry, or charge him with notice that the notes belong to the bank.

2. SAME.
One who was president both of the A. Bank and the B. Bank received from the president of a third bank two notes, which the latter claimed to own individually, as collateral both for balances due from his bank to the A. Bank, and for debts due by him individually to the B. Bank. The notes were kept by the A. Bank until dishonored, and until its own balances were discharged, and were then sent to the B. Bank. *Held*, that the fact that the B. Bank received physical possession of the notes after dishonor was no evidence that it was not a bona fide holder for value.

In Error to the United States Circuit Court for the Southern District of Georgia, Eastern Division.

This suit was brought by the First National Bank of Brandon, Vt., against Kaiser & Bro., to recover the amount of two promissory notes, as follows:

"$2,000.00. Brunswick, Ga., May 11th, 1893.

"Ninety days after date, we promise to pay to the order of Lloyd & Adams two thousand dollars, at Brunswick State Bank, Brunswick, Ga. Value received.

"No. 4,397. A. Kaiser & Bro.

"Due Aug. 12."

Indorsed on back:

"Lloyd & Adams.
"Brunswick State Bank, Brunswick, Ga.
"F. E. Cunningham, Cashier."

Indorsed across face:

"Noted and protested for nonpayment, Aug. 12th, 1893.
"M. P. King, Notary Public, Glynn Co., Ga."

"$3,000.00. Brunswick, Ga., May 11th, 1893.

"Four months after date, we promise to pay to the order of Lloyd & Adams three thousand dollars, at Brunswick State Bank, Brunswick, Ga. Value received.

"No. 4,396. A. Kaiser & Bro.

"Due Sept. 14."

Indorsed on back:

"Lloyd & Adams.
"Brunswick State Bank, Brunswick, Ga.
"F. E. Cunningham, Cashier."

Indorsed across face:

"Noted and protested for nonpayment, Sept. 14th, 1893.
"W. B. Cook, Notary Public, Glynn County, Ga."

The defense interposed was that the notes were without consideration, being accommodation paper given by Kaiser & Bro. on behalf of the Brunswick State Bank on the fraudulent representations of the president of said bank, and denying that the First National Bank of Brandon obtained possession of the notes in the regular course of business, or was a bona fide holder of the same, for value,

Digitized by Google

asserting that the said bank obtained the same after maturity, and after said notes were dishonored, and fully charged with notice that the said notes were fraudulently obtained.

On the trial, the uncontroverted evidence was as follows: On May 11, 1893, Charles B. Lloyd, the president of the Brunswick State Bank, by representations, subsequently ascertained to be false and fraudulent, as to the solvency of the Brunswick State Bank and of the firm of Lloyd & Adams, induced A. Kaiser & Bro. to make the notes sued on for the accommodation of the Brunswick State Bank. At that time, Kaiser & Bro. owed nothing to the Brunswick State Bank, nor did they owe Lloyd & Adams, the nominal payees of the note. Among other representations, Lloyd stated that the Brunswick State Bank and the firm of Lloyd & Adams were solvent, when, in fact, the said bank and the said firm were both insolvent. Having obtained the note from Kaiser & Bro., Lloyd indorsed the name of Lloyd & Adams thereon, and had the cashier of the Brunswick State Bank stamp the indorsement of said bank on said notes, and sign his name as cashier to attest the bank's indorsement, and then, in the latter part of May or early in June, 1893, took the notes to the Sprague National Bank of Brooklyn, N. Y., of which N. T. Sprague was president; the said Sprague being also at the time president of the First National Bank of Brandon, Vt. Mr. Sprague, president of the two banks aforesaid, testified, without contradiction, as to the negotiations then completed, as follows: "Mr. Lloyd, the president of the bank in Brunswick, brought them to the bank to get accommodations on the notes in return for favors from the Sprague Bank. * * * Mr. Lloyd said the bank was needing funds. I said: 'Mr. Lloyd, you are owing the First National Bank of Brandon, and I do not want to advance any more to you unless you give security.' His wife was present at the time, and he offered to secure me by two notes which he had, and said he owned, and that they were perfectly good. I looked it up, and found they were satisfactory. I said then: 'Mr. Lloyd, you know I am interested in one bank as much as the other,—president of the Sprague Bank, and president of the other; and I am going to have both debts secured, and whatever security you have must go, after the debts made here, to secure those of the bank there, and vice versa.' He agreed to it very readily and courteously. We agreed to it, and I rapped, and called the cashier: 'Mr. Brown, take from Mr. Lloyd those notes for the bank, and you may do so and so with them for his account until that is settled, and then they are for the Brandon Bank of Vermont, as collateral.' He said: 'Yes, sir.'" At the time of these negotiations in the parlor of the Sprague National Bank in Brooklyn, the Brunswick State Bank was then indebted to the Sprague National Bank, but owed the First National Bank of Brandon nothing. Lloyd owed the Sprague National Bank nothing, but was indebted about the sum of $8,500 to the First National Bank of Brandon.

On June 2, 1893, Kaiser & Bro. sent a telegraphic dispatch to the Sprague National Bank, as follows:

"Do you hold our two notes, two and three thousand dollars, favor of Lloyd & Adams, as collateral only Brunswick Terminal Company; Liverpool exchange it is accommodation paper. Answer.

"[Signed] A. Kaiser & Brother."

To that dispatch the Sprague National Bank, by its cashier, sent the following reply:

"Brooklyn, June 2, 1893.

"A. Kaiser & Brother, Brunswick, Ga.: Telegram received. We hold notes named collateral to any indebtedness to us of said bank.

"Sprague National Bank."

The two notes in the suit were held by the Sprague National Bank from the time they were received from Lloyd until they were forwarded for collection. After protest they were returned to the Sprague National Bank, and by its cashier handed over to Sprague, president of the First National Bank of Brandon. On June 1, 1893, the Brunswick State Bank owed the Sprague National Bank $7,744.31. On that day the accounts were balanced. Thereafter balances were struck on the following days, showing the following indebtedness: June 26, 1893, $9,512.34. Subsequently, on the same day, a new balance was struck, and it then appeared that on pending account there was due them a credit of $7,483.57. The last balance was made September 25, 1893, and on that balancing of accounts

Digitized by Google

between the Brunswick State Bank and the Sprague National Bank there appeared to be due a credit to the Brunswick State Bank of $184.10. Whatever indebtedness the Brunswick State Bank owed the Sprague National Bank arose through the payment of drafts of the Brunswick State Bank, drawn on the Sprague National Bank, and the charging back to that account the unpaid discounts and expenses. Charles B. Lloyd, president of the Brunswick State Bank, died June 26, 1893. It was admitted on the trial on the part of the plaintiff that Mr. P. M. Adams, of the late firm of Lloyd & Adams, is hopelessly insolvent, and wholly incapable of responding to any judgments which may be rendered on said notes; and the following is the testimony of F. E. Cunningham, cashier of the Brunswick State Bank, whose indorsement is on the notes sued on, to wit: That the Brunswick State Bank owed the First National Bank of Brandon nothing, and had no account with it; and that the Brunswick State Bank did not discount the notes sued on for Lloyd & Adams at all, but that Mr. Lloyd just carried them there, and had him put the Brunswick State Bank's indorsement on them, to be used for the Brunswick State Bank. It was also admitted by plaintiff that the Brunswick State Bank, on the day that these notes were made, was insolvent, and had been hopelessly insolvent 60 days before that time; and that Charles B. Lloyd had absolute control of the bank, acted as board of directors, president, cashier; and that he negotiated and transacted the entire business of the Brunswick State Bank; and that these notes sued on were handed to Mr. Sprague by Mr. Lloyd, in the parlor of the Sprague Bank, in Brooklyn, N. Y. The defendants admitted on the trial that Kaiser & Bro. knew that Charles B. Lloyd was president of the Brunswick State Bank, and also knew that he owned a majority of the stock of the Brunswick State Bank.

T. P. Ravenel, for plaintiffs in error.

Samuel B. Adams and A. J. Crovatt, for defendant in error.

Before PARDEE and McCORMICK, Circuit Judges, and MAXEY, District Judge.

PARDEE, Circuit Judge (after stating the facts as above). Upon the foregoing facts, established by the evidence, the trial judge directed a verdict for the First National Bank of Brandon, upon which Kaiser & Bro. sued out this writ of error. Although there are numerous argumentative assignments of error, the contention is made in this court that the court erred in directing a verdict for the plaintiff below—First, because the evidence involved the right of the holders of notes which had been procured from the makers by fraud to recover against the makers, there being a conflict in the testimony as to the bona fides of the plaintiff's title, and this question should have been submitted to the jury; second, because there was proof not rebutted by the plaintiff that the notes were procured from the defendants by fraud, and there was strong proof that the plaintiff received them after dishonor.

The evidence was uncontradicted to the effect that the First National Bank of Brandon acquired an interest as pledgee in the notes in controversy from the holder, Charles B. Lloyd, who represented himself as the owner, before maturity, for a valuable consideration, and without notice, except such notice as was given by the fact that the notes presented bore an indorsement in blank by the Brunswick State Bank, coupled with the knowledge that Lloyd, who presented the notes of which he claimed to be the owner, was the president of the Brunswick State Bank. Counsel admits the law to be that nothing short of willful ignorance, tantamount to fraud in procurement, will defeat the rights of a bona fide holder of negotiable

Digitized by Google

instruments taken before dishonor, and without notice of the defect of title in the party pledging, but contends in this case that because the paper had been indorsed by the Brunswick State Bank, and was originally offered to the Sprague National Bank for the purpose of increasing its balance there, it was willful ignorance on the part of the president of the First National Bank of Brandon not to know that the notes did not belong to Charles B. Lloyd individually, but to the Brunswick State Bank.

In Bank of Edgefield v. Farmers' Co-operative Manuf'g Co., 2 U. S. App. 282, 295, 2 C. C. A. 637, 646, and 52 Fed. 98, 103, it was held by this court:

"It has been settled in the courts of the United States since the leading case of Goodman v. Simonds, 20 How. 343, that one who acquires mercantile paper before maturity from another, who is apparently the owner, giving a consideration for it, obtains a good title, though he may know facts and circumstances that would cause him to suspect, or would cause one of ordinary prudence to suspect, that the person from whom he obtained it had no interest in or authority to use it for his own benefit, and though, by ordinary diligence, he could have ascertained those facts. Swift v. Smith, 102 U. S. 442; King v. Doane, 139 U. S. 166, 173, 11 Sup. Ct. 465."

Taking the law to be as thus declared and admitted by plaintiffs in error, it is clear that the evidence, given its fullest force, does not show a case where the First National Bank of Brandon was charged with any such notice of outstanding rights and equities as put it upon further inquiry, under penalty of being charged with willful ignorance of such outstanding rights and equities.

The plaintiffs in error further contend that there was strong proof that the plaintiff, the First National Bank of Brandon, received the notes after dishonor. The evidence in this respect is that after the notes were delivered to the Sprague National Bank, which bank was the redeeming agent of the First National Bank of Brandon, they remained in the physical custody of the Sprague Bank until near maturity, when they were forwarded to other agents for collection. After the notes were protested, they were turned over to the First National Bank of Brandon. The case shows that the First National Bank of Brandon acquired conjointly with the Sprague National Bank the right and title to these notes as collateral, and that, in the pledge resulting, the Sprague National Bank was the depository. The mere fact that the physical possession of the notes remained in the hands of the Sprague National Bank until after the indebtedness of the Brunswick State Bank and the Sprague Bank was settled, and even after, would raise no presumption inimical to the rights of the First National Bank of Brandon as pledgee, if its original title as such pledgee was good. As we understand the undisputed evidence in the case, while it may not be denied that there were some circumstances attending the pledge of the notes in suit, which, if more fully explained, would have relieved the case of all doubt, yet we are of opinion that the case as made permitted only one verdict responsive to and in accordance with the evidence as submitted, and that verdict was the one directed by the court, in favor of the First National Bank of Brandon. Necessarily, the judgment of the circuit court is affirmed.

Digitized by Google

(78 Fed. 285.)

TRAVELERS' INS. CO. v. SELDEN.

(Circuit Court of Appeals, Fourth Circuit. February 2, 1897.)

No. 179.

ACCIDENT INSURANCE—"BODILY INFIRMITIES"—APOPLEXY.

The T. Ins. Co. issued an accident policy to one S., insuring him against death resulting through external, violent, and accidental means, but not covering death resulting wholly or partly, directly or indirectly, from disease or bodily infirmity, or voluntary overexertion. S., a man 53 years of age, while engaged in work which required stooping, and shortly after running rapidly up a hillside, to get an article needed in his work, was attacked with pains in his head, and shortly after died. On the trial of an action on the policy, two physicians, called by the plaintiff, testified that S. died of apoplexy, which is a bodily infirmity or disease, and that there was nothing in the circumstances to have caused death if there had been no bodily infirmity or predisposition to apoplexy. *Held*, that it was error to refuse to direct a verdict for the defendant.

In Error to the Circuit Court of the United States for the Eastern District of Virginia.

J. Alston Cabell and Patrick H. C. Cabell, for plaintiff in error.

Barton H. Wise and John S. Wise, for defendant in error.

Before GOFF, Circuit Judge, and MORRIS and BRAWLEY, District Judges.

BRAWLEY, District Judge. The policy of insurance on which this action is based is on its face called an "accident policy," and contains the covenant of the Travelers' Insurance Company to pay a stipulated indemnity to Richard C. Selden for loss of time "resulting from bodily injuries effected during the term of this insurance through external, violent, and accidental means, which shall, independently of all other causes, immediately and wholly disable him from transacting any and every kind of business." It also contained a covenant to pay $5,000 to his wife or legal representative if death results from such injuries alone, with a proviso that the company should not be liable in case of accident or death resulting, wholly or partly, directly or indirectly, from disease or bodily infirmity, or voluntary overexertion, nor for injuries of which there was no visible mark on the body. The policy was issued on the 22d of March, 1895. The insured died on the 23d of April, 1895, and this is an action of assumpsit on the policy, resulting in a verdict for the plaintiff for $5,000, with interest, and the case is before us on a writ of error.

Various exceptions were taken to the charge of the presiding judge, and to his refusals to charge as requested, but the conclusion reached by us renders it unnecessary to consider them in detail.

The testimony shows that, on the morning of April 19th, the deceased, a farmer, residing on his plantation, went to his barnyard for the purpose of castrating a colt; that he was apparently in his usual health, which is described as that of a vigorous, hardy man,

Digitized by Google

somewhat fleshy, about 53 years of age, and accustomed to lead an active life; that upon his arrival at the barn the colt was seized by some of the men employed on the farm, and thrown down; that Selden thereupon tied him, and proceeded to castrate him; and that, after removing one of the seeds, it was found that the iron used in burning the part was too cold for the purpose, whereupon Selden got up from his stooping posture, ran rapidly up a little hillside, to a fire, where he heated the iron, and ran back to where the colt was lying, when he stooped over, burned the place, and applied the grease, and proceeded to remove the other seed. Before the operation was entirely finished, he showed signs of distress, threw his hand up over his eye, and exclaimed, "I have a fearful pain over my eye," and, as he was about falling over on the colt, he was caught by the attendants, and carried to the barn steps, having lost the use of one of his legs and becoming very sick. After reaching the barn, he put his hand to his head, and said to one of the men, "John, this is the last of me." He was soon removed to his house in a buggy, put to bed, and a physician was summoned. Two physicians attended him until death, on the 23d, and the certificates of both state that he died of apoplexy. The testimony shows that, in going from the colt to the fire, deceased passed over a rough, rocky piece of ground, on which corncobs were scattered in places; but there is no proof that he stumbled or fell, either going or returning. One of the attending physicians was examined at the trial, and testified that the deceased died from a well-defined case of apoplexy, which he defined to be the rupture of a blood vessel on the brain, and that the same was regarded by medical writers and the profession as a bodily infirmity or disease. He further gave it as his opinion, after hearing the witnesses detail the occurrences on the 19th of April, that there was not enough in those circumstances to have caused death, had there not been some bodily infirmity, or the existence of disease, or predisposition to apoplexy. The certificate of the other attending physician, who was the family physician of the deceased, was also offered in evidence by the plaintiff. It is to the effect that he was called in on the 19th of April, and found Mr. Selden critically ill; that he called another physician in to consultation (the same as was examined at the trial); that he was with him day and night until his death; that he died of apoplexy; that there was no history of injury, and no signs of any; and that no post mortem was held. The defendant company offered no testimony, and upon the conclusion of the plaintiff's case duly moved the court to direct a verdict. This motion, which is in the nature of a demurrer to the evidence, is in accordance with the practice in this jurisdiction, and it is now to be considered whether, under the circumstances of this case, it should have been granted.

"It is the settled law of this court," says Mr. Justice Gray, in Randall v. Railroad Co., 109 U. S. 482, 3 Sup. Ct. 324, "that when the evidence given at the trial, with all the inferences that the jury could justifiably draw from it, is insufficient to support a verdict for the plaintiff, so that such a verdict, if returned, must be set

Digitized by Google

aside, the court is not bound to submit the case to the jury, but may direct a verdict for the defendant." Other cases of equally high authority declare that it is not only the right, but the duty, of the court, if the evidence is such as not to warrant a verdict for a party, to direct the jury accordingly, and that in every case, before the evidence is left to the jury, there is a preliminary question to be decided by the judge whether there is any evidence produced by the party upon whom the onus of proof is imposed on which the jury can properly proceed to find a verdict for the party introducing it. The legal sufficiency of the evidence to support the verdict presents a question of law, the decision of which is not a matter of discretion, but of duty, and is as much the subject of exception and review as any other ruling of the court in the course of the trial. In all cases where there is conflict of testimony, or question as to the credibility of witnesses and preponderance of proof, and in actions of negligence, where the line which separates questions of law from questions of fact is so close that it cannot be accurately delimited, and minds equally intelligent and equally impartial might draw different conclusions, the judgment of 12 impartial men, of the average of the community, applying their separate experiences of life to the solution of such doubts as may arise, is more likely to be wise and safe than the conclusion of any single judge, and the practice is not to be encouraged which would substitute the conclusions of one mind for that average judgment which it is the object of our system of jurisprudence to obtain in all proper cases. But where there is a simple question of contract or its breach, and the facts are undisputed, it must be ruled as a question of law; for the rights of parties in such cases must be decided according to the law of the land as expounded by the courts, and cannot be left to the arbitrary determination of a jury, which may adopt theories without proof, substitute possibilities for facts, and conjectures for evidence. Judges are no more free from the weaknesses of human nature than are jurors, but where responsibility is diffused the obligation of duty seems to rest more lightly upon the individual than where it is concentrated, and the pleadings of sympathy or the promptings of prejudice or passion are ofttimes likely to produce that result on a jury which it is the special and highest duty of the judge to prevent.

The case under consideration was simply one of contract. Had the policy of insurance been an ordinary life policy, the right to recovery was plain; but it is the duty of courts to enforce contracts as made, and not to make, or allow to be made, new contracts between the parties. The contract was what is known as, and what on its face and in its terms it purported to be, an "accident policy," and the defendant corporation covenanted to pay the sum of money named if death resulted from bodily injuries through "external, violent, and accidental means alone, independently of all other causes," and it was expressly stipulated that it should "not cover injuries of which there is no visible mark, nor death resulting wholly or partly, directly or indirectly, from disease or bodily infirmity," or from "voluntary overexertion." In an etymological sense anything that

Digitized by Google

happens may be said to be an "accident," but, in the sense in which the word is used in this policy, as shown by the context, and as expounded in similar cases, it is to be taken as meaning "an event which proceeds from an unknown cause, or as an unusual effect of a known cause, and therefore unexpected,"—something casual and fortuitous. To entitle the plaintiff below to recover, the burden of proof was upon her, not only to show that the deceased came to his death through "external, violent, and accidental means alone," but also to show that the death was not due, in whole or in part, directly or indirectly, to disease or bodily infirmity. There was not only no proof of any accident, but conclusive evidence, from the only medical witnesses examined, that death was due to disease. If, during the operation upon the colt, while running to the fire for the hot iron, the deceased had stumbled or fell, that might have been considered an accident; but there was nothing of the kind. At most, it might be contended that the exertions and activities of that morning tended to bring into activity a then existing but dormant disorder; but "voluntary overexertion," and disease and bodily infirmity, are in express words not insured against.

There was not only no evidence that the death was caused by external, violent, and accidental means, but conclusive evidence to the contrary. The only medical testimony as to the cause of death was that of Dr. Michaux, who swore that the deceased died of apoplexy, and that there was nothing in the circumstances detailed sufficient to cause death without a previously existing disease. He was a witness put upon the stand by the plaintiff, and there was no evidence to contradict him. Where the weight of credible testimony proves the existence of a fact, it must be accepted as a fact. Where an event occurs which can be readily explained as an operation of nature, working through natural, usual, and ordinary laws, that cannot be called an accident; nor can conjectures be allowed to displace proofs. Most modern writers apply the term "apoplexy" to cerebral hemorrhages. It is a well-defined disease,—as well understood as pneumonia. It is a disease to which men of the age of the deceased are most peculiarly subject. Hippocrates states that it is of most frequent occurrence between the ages of 40 and 60, and all medical experience confirms the truth of this observation, and the reason is obvious, for the blood vessels of the brain are liable to undergo degenerative changes after middle life. The texture becoming fragile, their function in carrying on the healthy nutrition of the brain is impaired, and, being liable to give way, the blood escapes into the brain. If the hemorrhage is slight in amount, and in that part of the brain where its presence gives rise to little disturbance, the effused blood undergoes gradual absorption, and a certain measure of recovery takes place, while, if a large vessel is ruptured, and blood extravasated in or around the important structures at the base of the brain, death is likely to follow within a short period. Severe exertion of mind or body, much stooping, anything, in fact, which tends, directly or indirectly, to increase the tension within the cerebral blood vessels, may bring on an attack. When a man with delicate lungs exposes his breast

Digitized by Google

unprotected to the wintry blast, you could as well attribute the pneumonia and death which may ensue to accident, as you could the stroke of apoplexy which follows when a man over 50 years of age engages in an operation which demands violent exertion and much stooping. In either case a man in the full vigor of youth and manhood might pass the ordeal unscathed; in both, death is due, directly or indirectly, to bodily infirmity.

Not only is there an entire absence of proof of any accident likely or sufficient to cause death in this case, but positive proof that death was due to disease, and no conflicting testimony whatever. What question, therefore, was there which could properly go to the jury? In Barry's Case, 131 U. S. 100, 9 Sup. Ct. 755, relied upon by the defendant in error, there was proof that the deceased jumped from a platform four or five feet high, alighting so heavily as to attract the attention of his companions, and was hurt; that he became ill on his way home, and much conflicting testimony as to the cause of his death, as to whether it resulted from duodenitis, or a stricture of the duodenum, caused by the jump. There being a conflict of testimony as to the cause of death, such a question was properly submitted to the jury. In Burrough's Case, 69 Pa. St. 51, there was conflicting testimony as to whether deceased received a blow upon the abdomen from a pitchfork, causing internal injuries, or whether death was due to a strain. The court held that an accidental strain, resulting in death, was an accidental injury, within the meaning of the policy; that being an unexpected event, happening by chance, and not occurring according to the usual course of things. In Martin's Case, 1 Fost. & F. 505, it was held that an injury to the spine, caused by the lifting of a heavy burden, was within the meaning of the policy, which was against any bodily injury occasioned by any external or material cause operating on the person of the insured.

It is unnecessary to cite the numerous and familiar cases which declare it to be the duty of the court to direct a verdict when the evidence is undisputed, or is of such conclusive character that the court would, in the exercise of a sound judicial discretion, be compelled to set aside a verdict rendered in opposition to it. In Improvement Co. v. Munson, 14 Wall. 448, Mr. Justice Clifford says:

> "Formerly it was held that if there was what is called a 'scintilla' of evidence in support of a case, the judge was bound to leave it to the jury; but recent decisions of high authority have established a more reasonable rule, that in every case, before the evidence is left to the jury, there is a preliminary question for the judge, not whether there is literally no evidence, but whether there is any upon which a jury can properly proceed to find a verdict for the party producing it upon which the onus of proof is imposed."

"Such is the constant practice," says Mr. Justice Swayne, in Bowditch v. Boston, 101 U. S. 16, because "it gives scientific certainty to the law in its application to the facts, and promotes the ends of justice." The court cannot allow the jury to assume the truth of any material fact without some evidence legally sufficient to establish it, and the jury cannot legally infer the existence of a material fact unless there is some proof of it. "The truth of the facts and circumstances offered in evidence in support of the allegations on

Digitized by Google

the record must be determined by the jury. But it is for the court to decide whether or not those facts and circumstances, if found by the jury to be true, are sufficient, in point of law, to maintain the allegations in the pleadings." Railroad Co. v. Woodson, 134 U. S. 622, 10 Sup. Ct. 630. It therefore follows that, when the facts and circumstances are admitted and undisputed, it becomes a question of law for the court to decide whether they support the averments of the pleadings, and it is error to leave a question of law to the arbitrary determination of a jury, for everybody knows that a case of this kind can have but one result if left to a jury, moved, as it must be, by the natural and creditable instincts of human nature, to sympathize with the afflicted. No case can be conceived which more strongly invokes the obligation to duty imposed upon the courts as set forth in the oft-quoted language of Mr. Justice Miller, in Pleasants v. Fant, 22 Wall. 116:

"It is the duty of the court, in its relation to the jury, to protect parties from unjust verdicts arising from ignorance of the rules of law and of evidence, from impulse of passion or prejudice, or from any other violation of his lawful rights in the conduct of a trial."

That the contract between the parties in this case, if decided by the rules of law, and not determined by the sympathies of the jury, would have had another result, finds apt illustration in the case cited in the brief, Mary M. Selden v. American etc., Insurance Co., where Mr. Commissioner Guy, in a carefully considered report, which was confirmed by the circuit court of the city of Richmond, reaches the conclusion that there was no liability upon a similar policy.

The judgment of the court below is reversed.

(78 Fed. 292.)

CITY OF JACKSONVILLE v. SMITH.

(Circuit Court of Appeals, Fifth Circuit. December 15, 1896.)

No. 529.

MUNICIPAL CORPORATIONS—DEFECTIVE STREETS—PERSONAL INJURIES.

A municipal corporation is liable in damages to parties injured through its negligence in failing to keep its streets in proper repair, though no special statute authorizes an action for such cause.

In Error to the Circuit Court of the United States for the Southern District of Florida.

Suit by Kate Smith, defendant in error, against the city of Jacksonville, plaintiff in error, to recover damages for personal injuries, arising from nonobservance of duty on the part of the city in reference to keeping one of its streets in proper repair and safe condition. The cause of action is set forth in the declaration as follows: "For that whereas defendant, before and on the 17th day of May, A. D. 1894, was possessed and had control of a certain public street, called 'Main Street,' in the said city, in the county aforesaid, and ought to have kept same in good and safe repair and condition, yet the defendant, well knowing the matters hereinafter mentioned, and not regarding its duty in that behalf, while it was so possessed, and had control of the said street, to wit, on the 17th day of May, A. D. 1894, aforesaid, then knowingly, wrongfully, and negligently suffered the same to

Digitized by Google

be and remain in bad and unsafe repair and condition; knowingly, wrongfully, and negligently suffered divers planks and pieces of plank to be and remain broken and loose upon the crossing of the said Main street, the defendant having full notice and knowledge thereof, by means whereof the plaintiff, who was then and there crossing the said street, then and there, necessarily, unavoidably, and without fault or negligence of hers, tripped and stumbled upon and against one of the said planks or pieces of plank lying upon the said street, and was thereby thrown, and fell to the ground; and the plaintiff was then and there rendered unconscious by the said fall, and received serious internal injuries, and she became sick, lame, and disordered, and so remained for a long time, to wit, from thence hitherto, and still so remains, during all which time she suffered, and now suffers, great pain, and was and is hindered from transacting her business affairs, and also, by means of the premises, was obliged to, and did, lay out divers sums of money, amounting to $200, in and about endeavoring to be healed of the said wounds, sickness, and disorder, to the damage of the plaintiff of $10,000, and therefore she brings this suit." To the declaration the plaintiff in error interposed a plea of not guilty, and filed a motion, accompanied by an affidavit, to dismiss the suit for want of jurisdiction, on the ground that the plaintiff and defendant were citizens of the same state. The motion to dismiss was overruled by the court. Several special instructions were asked by counsel for the city, which, in effect, requested the court to direct a verdict for the defendant, on the ground that, in the absence of statutory provisions authorizing suit, an action for damages will not lie in favor of an individual against a municipal corporation for injuries caused by the negligence of the corporation in permitting its streets to remain in a defective and unsafe condition. These instructions were refused, and the following statement appears in the record, as part of a bill of exceptions, in reference to the general charge of the court: "And the said judge, the said parties having concluded and submitted their testimony and said several matters aforesaid, and after his said refusal to charge as above shown, did then and there give his opinion, and deliver his charge to the jury, touching the legal duty of the said defendant to keep the streets and sidewalks of said city in proper repair and condition, and free from obstructions in respect of the rights of the public in passing over the same, and also as touching the doctrine of contributory negligence, and each and every of all the matters involved in the issues in said case, instructing the jury in the law therein satisfactorily to the parties to said cause, to which said charge, given orally, there was no objection or exception." Upon the issues joined, the cause was submitted to a jury; and, a verdict being returned in favor of the plaintiff below, judgment was duly entered thereon.

The charter of plaintiff in error, among other powers not necessary to enumerate, confers upon the city the following: Section 2, art. 1: "Said corporation shall have perpetual succession, shall sue and be sued, plead and be impleaded, may purchase, lease, receive and hold property, real and personal, within said city; and may sell, lease or otherwise dispose of the same for the benefit of the city; and may purchase, lease, receive and hold property, real and personal, beyond the limits of the city, to be used for the burial of the dead; for the erection of water works; for the establishment of poor houses, pest houses, houses of detention and correction; for public parks and promenades, and for any other public purpose that the mayor and city council may deem necessary or proper; and may sell, lease or otherwise dispose of such property for the benefit of the city to the same extent as natural persons may. Said city shall have and use a common seal, and change it at pleasure." Section 4, art. 3: "The mayor and city council shall, within the limitations of this act, have power by ordinance to levy and collect taxes upon all property and privileges taxable by law for state purposes; to appropriate money and provide for the payment of the debts and expenses of the city, and also for the debts of the municipal corporation of which said city is the successor; * * * to make appropriation to open, alter, abolish, widen, extend, establish, grade, pave or otherwise improve, clean and keep in repair streets, alleys and sidewalks, and to erect, establish and keep in repair bridges, culverts, sewers and gutters; and to make appropriations for lighting the streets and public buildings, and for the erection of all buildings necessary for the use of the city; * * * to fix from time to time the number and boundaries of the city wards; to pass all ordinances necessary for the health, convenience and safety of the citizens, and to carry out the full intent and meaning of this act, and to

Digitized by Google

accomplish the object of this incorporation; to impose penalties upon the owners, occupants or agents of any house, walk or sidewalk or other structure, which may be considered dangerous or detrimental to the citizens, unless, after due notice to be fixed by ordinance, the same be removed or repaired; * * * regulate, provide for and compel the construction and repair of sidewalks and foot pavements; * * * to regulate, require and provide for the construction or repair of streets and paving the same; * * * to grant the right of way through the streets, avenues and squares of said city for the purpose of street, or other railroads; to take and appropriate grounds for widening streets or parts thereof, or for laying out new streets, avenues, squares, parks or promenades, when the public convenience may require it." Laws 1887, c. 3775.

Geo. U. Walker and Porcher L'Engle, for plaintiff in error.

Before PARDEE and McCORMICK, Circuit Judges, and MAXEY, District Judge.

MAXEY, District Judge, after stating the case, delivered the opinion of the court.

Error is prosecuted in this case to reverse the judgment rendered by the circuit court adjudging the liability of the city of Jacksonville to respond in damages to the defendant in error. The three specifications of error relied upon by plaintiff in error, in the brief of counsel, are the following: The court erred in refusing to give in charge to the jury the special instructions requested; in refusing to vacate the verdict because the evidence proved contributory negligence on the part of the defendant in error; and in refusing to set aside the verdict because excessive.

Under the first specification, counsel for plaintiff in error states, in the following language, the real question for consideration.

"The fundamental proposition of the defense is that upon an admission of all the facts, and confessing that every allegation in the declaration was true, and proved to the court and jury, yet the city of Jacksonville, being a municipal corporation, vested by statute with functions of a public nature, to be exercised for the public benefit, is not liable in an action of tort for damages at the hands of an individual, unless such private action is expressly authorized by statute."

In view of the statement thus made of the question for decision, it is unnecessary to go into a recapitulation of the testimony developed on the trial. It is sufficient to say the evidence discloses that the defendant in error was injured from the effects of a fall she received in attempting to cross one of the streets of the city of Jacksonville, and, further, that, at the time of the injury, the street was, and had been for some days previous, in a defective condition. One of the witnesses thus refers to the condition of the street and the occurrence of the accident:

"My recollection is it was in a pretty bad condition. The street railway had been raised to the grade of the street, and was some four or five inches above the level of the street. There were several boards lying longitudinally with the railway. I think they were there from the block pavement being taken up. Some of them were turned up, and the street was in a very bad condition. I frequently noticed people had difficulty in crossing at that place, and on this occasion, when I saw the lady fall, I naturally thought she had tripped up on one of the boards, although I didn't see her trip. She struck the rail."

The question of law raised by the assignment has had the consideration of the supreme court of Florida, and in an elaborate and carefully prepared opinion, in a case in which the plaintiff in error

Digitized by Google

was a party, Mr. Justice Van Valkenburgh, speaking for a unanimous court, observes:

"We think the true doctrine is that a municipal corporation is liable in damages to parties receiving special injuries by reason of its nonobservance of duty in keeping its streets, alleys, etc., in good repair, although the work of such repairs is let out by contract to another person." City of Jacksonville v. Drew, 19 Fla. 116.

The Drew Case reiterates the principle announced by the court in the earlier case of City of Tallahassee v. Fortune, 3 Fla. 19. The essential facts of the two cases above referred to are substantially similar to those in the case at bar, and the same legal principle applies here as was enforced by the supreme court in those cases. See, also, the more recent case of City of Orlando v. Pragg, 31 Fla. 111, 12 South. 368.

The rule established by the supreme court of Florida is in accord with the doctrine announced by the supreme court of the United States in Barnes v. District of Columbia, 91 U. S. 540, and Detroit v. Osborne, 135 U. S. 492, 10 Sup. Ct. 1012.

In the case of Barnes, 91 U. S., at page 551, Mr. Justice Hunt, referring to a decision of the supreme court of Michigan, says:

"The authorities establishing the contrary doctrine, that a city is responsible for its mere negligence, are so numerous and so well considered that the law must be deemed to be settled in accordance with them."

In Barnes v. District of Columbia, and City of Galveston v. Posnainsky, 62 Tex. 129, 130, appears a long list of authorities sustaining the rule held by the supreme court of Florida.

Counsel for plaintiff in error, however, refers to the case of Forbes v. Board of Health, 28 Fla. 26, 9 South. 862, as maintaining a contrary doctrine. The Forbes Case is clearly distinguishable from this case and those previously decided by the supreme court of Florida. The dissimilarity was evidently thought to be so apparent that no reference is made by Mr. Justice Mabry, in his opinion, to the earlier cases. "We take it to be a sound principle," says the supreme court, "that no proposition of law can be said to be overruled by a court which was not in the mind of the court when the decision was rendered." Woodruff v. Parham, 8 Wall. 138.

The remaining assignments relate to the action of the circuit court in refusing to grant a new trial. Whether the court erred in overruling the motion for a new trial is a question which will not be inquired into here, as it was a matter in the discretion of the court below, and is not subject to review in this court. Railway Co. v. Struble, 109 U. S. 381, 3 Sup. Ct. 270; Zimpelman v. Hipwell, 4 C. C. A. 609, 54 Fed. 848; Mining Co. v. Fullerton, 7 C. C. A. 340, 58 Fed. 521; Alexander v. U. S., 6 C. C. A. 602, 57 Fed. 828.

There being no error in the judgment of the circuit court, it is accordingly affirmed.

Digitized by Google

(78 Fed. 319.)

UNITED STATES v. PINE RIVER LOGGING & IMPROVEMENT CO. et al.

(Circuit Court of Appeals, Eighth Circuit. January 18, 1897.)

No. 780.

TROVER AND CONVERSION—TIMBER CUT FROM PUBLIC LANDS—AGREEMENT WITH GOVERNMENT.

The United States government, through an agent of the land office, seized certain logs which were in the possession of defendants, claiming that they had been unlawfully cut on an Indian reservation. Thereupon a contract was entered into between the government and defendants, by which it was agreed, in order to preserve the logs free of cost to the United States, that they might be removed to a boom in the Mississippi river at Minneapolis, with the distinct understanding that the government's possession of the logs should not be questioned or impaired on account of such removal, and that nothing in the contract should impair any right of either party in the logs. The logs were removed to Minneapolis, and, it being found desirable to manufacture them into lumber, defendants gave bonds to the government, reciting the previous proceedings, and the purpose to have the logs manufactured into lumber to preserve the property for the interest of all concerned, and conditioned for the payment of any judgment that might be recovered by the government against the defendants, in any form of action, on account of the premises. The defendants, after the logs were sawed, sold the lumber, and took the proceeds. *Held*, that the government did not, by accepting the bonds, agree to relinquish its rights in the logs, or consent that the lumber made from them might be sold by the defendants for their own benefit, and, upon proving that the logs were wrongfully cut, it would be entitled to recover from the defendants for a conversion thereof, and not merely for a trespass on the Indian reservation.

In Error to the Circuit Court of the United States for the District of Minnesota.

John E. Stryker, for plaintiff in error.

Eugene G. Hay and J. B. Atwater, for defendants in error.

Before CALDWELL, SANBORN, and THAYER, Circuit Judges.

THAYER, Circuit Judge. This suit was brought by the United States against the Pine River Logging & Improvement Company, a corporation, and Joel B. Bassett and William L. Bassett, co-partners as J. B. Bassett & Co., who are the defendants in error, and against John S. Pillsbury and Charles A. Smith, co-partners as C. A. Smith & Co., for the wrongful conversion of 22,005,921 feet of pine lumber, which was alleged in the complaint to have been taken from the Mississippi Indian reservation in the state of Minnesota. The complaint, which contained nine counts, charged, in substance, that nine different parties had wrongfully felled certain pine trees standing on said Indian reservation, and had cut the same into logs, and had removed the logs from the reservation; that the trespasses in question were committed at the special instance and request of the defendants; that the logs, when thus cut, had been delivered to the defendants; that the defendants had thereupon caused the logs to be floated down the Mississippi river to the city of Minneapolis, and to be there manufactured into lumber; and that they had sold the lumber, and had appropriated the proceeds thereof to their own use.

Digitized by Google

The answers which were filed by the defendants to the aforesaid complaint alleged, in substance, the following facts: That the logs referred to were cut under and by virtue of contracts which had been entered into with certain Chippewa Indians for the cutting of dead and down timber found on said reservation; that said contracts had been executed in pursuance of the provisions of an act of congress approved February 16, 1889, in relation to the cutting of dead and fallen timber on Indian lands (25 Stat. 673, c. 172); that payment for the logs so cut and removed had been made in full to the United States and to the proper Indian agent in accordance with the provisions of said contracts; that said logs were so cut by said Indians, and delivered to and accepted by the defendants in good faith, in the honest belief that said logs had been lawfully cut under said contracts, from dead and down timber, and that the defendants were entitled to the same, and became the owners thereof upon delivery of the logs, and upon the making of the aforesaid payments; that, after the said logs had been delivered to the defendants, and before they were floated down the river to Minneapolis, the United States, through its proper officer, had seized and taken possession of the logs, claiming that they were cut from green and growing timber, and not from dead or down timber; that thereafter, for the purpose of preserving said logs, and realizing the full value of the same for the party who should ultimately be determined to be owner thereof, a contract was entered into between the United States and the defendants, which was as follows:

"This agreement, made and entered into this 27th day of May, 1892, by and between the government of the United States, * * * party of the first part, and the Pine River Logging & Improvement Company, * * * and J. B. Bassett & Company, * * * witnesseth: That whereas, the United States, by and through a special agent of the general land office, has seized and is now in the undisputed possession of certain pine saw logs heretofore cut on the Winnebigoshish and Leech Lake Indian reservations, in the state of Minnesota, said logs being now in the waters of the Winnebigoshish Lake, Leech Lake, Leech river, Mississippi river, and Ball Club Lake, state of Minnesota, and within the limits of the Indian reservations aforesaid; and whereas, it is apprehended by both parties that said logs will suffer deterioration in quality by being suffered to remain where they now are until the season of 1893; and whereas, the parties of the second part desire, for the preservation of whatsoever property interest they may have in said logs, to remove, or cause the same to be removed, to a boom in the Mississippi river near the city of Minneapolis, and are willing to so remove said logs without questioning or attempting to disturb the possession thereof in the United States: Therefore, it is mutually agreed and understood that the parties of the second part may, without charge or cost to the United States, and under the supervision of the special agent of the general land office, cause said logs to be driven from their present position, through the waters of the Mississippi river, to such a boom in the Mississippi river at or near the city of Minneapolis as the Mississippi & Rum River Boom Company may designate: provided, that said logs shall be separated from all other logs and detained at Minneapolis in the boom to be designated by the boom company aforesaid, subject to the order of the commissioner of the general land office. In consideration of the covenant and agreement aforesaid, and with the distinct understanding that the possession of the United States shall in no sense be questioned or impaired on account of the location of the logs, the United States does hereby agree, through the commissioner of the general land office, that said logs may be driven in the manner and subject to the conditions hereinbefore stated: provided, that nothing in this contract contained shall be held in any proceeding, legal or otherwise, hereinafter to be had, to impair any right, title, property, or interest that the said parties of the second part, or either

Digitized by Google

of them, or the United States, may have in or to the said logs, or any of them; the object of this contract being to recognize and continue possession in the United States, and to allow said logs to be driven without in any way affecting the question of right, title, property, or interest in the logs, and to leave such questions for future determination."

The answers further showed that thereafter, on March 10, 1893, after the logs had been driven to the city of Minneapolis in compliance with the provisions of the aforesaid contract, two bonds were accepted by the United States, one of them being executed by the Pine River Logging & Improvement Company as principal, and the other by the members of the firm of J. B. Bassett & Co. as principals. The bond executed by the Pine River Logging & Improvement Company contained the following recitals and condition, and the bond executed by the firm of J. B. Bassett & Co. was of like tenor and effect:

"Whereas, the above-named Pine River Logging & Improvement Company, principal, did in the year 1891 enter into divers contracts with sundry Indians of the Chippewa Nation, which contracts were duly approved by the department of the interior, whereby each of the said several Indians so contracted with were to cut, haul, and deliver during the season of 1891–92 onto certain waters of the Mississippi river a certain quantity of pine saw logs to be cut on a certain Chippewa Indian reservation in Minnesota, from dead and down timber, and when so cut to deliver said logs to the above-named principals; and whereas, each of said Indians did proceed, in pursuance of said contract, to cut a certain quantity of pine saw logs, and did deliver them in certain waters of the Mississippi river to the above-named principal; and whereas, a controversy afterward arose between said principal and the United States as to whether the said logs so cut were cut from dead and down timber, or as to whether the same were in great part cut from green timber; and whereas, in consequence of such a controversy, said logs, while in the possession of said principal, were seized at or about their place of delivery to the said waters, by the United States, acting through the officers and employés of the department of the interior; and whereas, the United States, and on May 27, 1892, entered into a written agreement in duplicate that the said logs so seized shall remain in the possession of the United States, but shall be driven at its expense by the said principal from said point of seizure to within the limits of the Mississippi & Rum River Boom Company; and whereas, the said logs have been so driven by the said principal; and whereas, the department of the interior has not yet completed its investigation into the facts of said case, and it is considered important by both parties that the said logs be further driven to the mill and manufactured for the preservation of the property, for the interest of all concerned, pending said investigation and a suit to be instituted by the United States, if it shall elect to do so, to determine the questions at issue between the parties: Now, therefore, the condition of this obligation is such that, if the said parties of the first part shall well and truly pay or cause to be paid, or satisfy or cause to be satisfied, to the United States of America, any judgment that may be rendered against the above-named principal in any form of action or suit which may be brought by the United States against said above-named principal on account of the premises hereinbefore recited, not to exceed the penalty of this bond, then this obligation to be void; otherwise to be of full force and effect."

Replying to the aforesaid answers, the United States admitted, in substance, that the defendants the Pine River Logging & Improvement Company and J. B. Bassett & Co. had entered into contracts with the various persons named in the answers for the cutting of logs from dead and down timber on said Mississippi Indian reservation, but it denied that the logs in controversy had been cut pursuant to said contracts, or in accordance with the act of congress of February 16, 1889, authorizing the cutting of dead and down timber on

Digitized by Google

Indian reservations. It averred, on the contrary, that the logs on account of which it sued were cut from pine trees on said reservation which were alive and standing. The United States admitted that it had seized and taken possession of the logs in controversy, subsequent to the delivery thereof to the defendants; that it had thereafter entered into a contract with the defendants, such as was described in the answer, for the driving of the logs down the river to the city of Minneapolis, and that it had thereafter, on March 10, 1893, accepted from the defendants the bonds which were set forth in full in the answers. After the case was at issue on the aforesaid pleadings, the defendants the Pine River Logging & Improvement Company, and Joel B. Bassett and William L. Bassett, composing the firm of J. B. Bassett & Co., filed a motion for judgment against the government on the pleadings, for the sole reason, as stated in the motion, that on the facts admitted by the pleadings "the plaintiff above named [the United States] is not entitled to maintain an action of trover or conversion against said two defendants, or either of them, for the matters and things set out in said cause of action." This motion was sustained by the circuit court, and a judgment was entered against the United States. To reverse said judgment the case was removed to this court by a writ of error.

The grounds upon which the defendants in error seek to sustain the summary judgment which was entered in their favor by the circuit court is that by accepting the two bonds of date March 10, 1893, the United States, in effect, agreed to relinquish all of its right, title, and interest in the logs which had been cut on the Indian reservation, and to look to the bonds for whatever indemnity it might be able to obtain for the wrong and injury complained of. It is urged, in substance, that by accepting the bonds the government not only agreed that the logs might be sawed into lumber, but that it also impliedly agreed that the lumber might be sold by the defendants for their own benefit; that the government cannot count on the sale of the lumber by the defendants, after it was sawed, as a wrongful act, nor maintain an action against the defendants, except for a trespass on lands belonging to the United States, and that in such action the damage recoverable is merely compensation for the injury done to the land over and above the value of the timber which was cut and removed. We are not able to assent to that view of the case. By the terms of the bonds it is obvious that the government cannot maintain a suit thereon against the defendants, until it has first recovered a judgment against them in some other form of action; therefore the view contended for denies the right of the government to recover any compensation for the large amount of standing timber alleged to have been cut on the reservation, and limits its recovery to compensation for such injury as may have been done to the land over and above the value of the severed trees, while the defendants were engaged in removing the timber. The bonds contained no provision authorizing the defendants to sell the timber in controversy after it should be manufactured into lumber at Minneapolis; and in view of the recitals found therein, and the circumstances under which they were executed and accepted, it is clear, we think, that the government neither in-

Digitized by Google

tended to authorize a sale of the lumber, nor to part with its title thereto, nor to relinquish any of its rights growing out of the original wrongful acts described in the complaint. After the logs were seized, the government, by the agreement of May 27, 1892, consented that the logs might be driven "without charge or cost to the United States, and under the supervision of the special agent of the general land office, * * * to such boom in the Mississippi river, at or near the city of Minneapolis, as the Mississippi & Rum River Boom Company may designate," for the purpose of preserving the property for the benefit of the party who should be adjudged to be the rightful owner; provided, however, that nothing done in that behalf "should be held in any proceeding, legal or otherwise, * * * to impair any right, title, property, or interest that the said parties of the second part, or either of them, or the United States, may have in or to the said logs, or any of them." The object of the contract was declared to be "to recognize and continue possession in the United States, and to allow said logs to be driven without in any way affecting the question of right, title, property, or interest in the logs, and to leave such questions for future determination."

When the logs had reached Minneapolis, it was found necessary to manufacture the same into lumber, as the bond recites, "for the preservation of the property for the interest of all concerned, pending said investigation, and a suit to be instituted by the United States, if it shall elect to do so, to determine the questions at issue between the parties." We fail to discover in the provisions of these bonds anything tantamount to a consent on the part of the United States that the defendants might market the lumber, when the logs should have been sawed, for their own account, or any implied agreement by the United States that it would relinquish its title thereto. By the acceptance of the bonds the government contemplated no relinquishment of its property rights, and no alteration in the legal status of the parties. It did consent that the form of the property might be changed from logs to lumber for the purpose of preserving its value, but beyond this its consent did not extend. The manifest purpose of the parties in entering into the agreement of May 27, 1892, and in executing the bonds of May 10, 1893, was to put the property in such form and shape that its value might be preserved, pending the litigation which was in contemplation, without altering the legal rights of either party. After the logs were manufactured into lumber, the defendants held the lumber as agents or bailees of the United States, precisely as they had previously held the logs under the agreement of May 27, 1892, while they were being driven down the river to Minneapolis.

It results from these views that the sale of the lumber by the defendants, and the appropriation of the proceeds to their own use, was a wrongful act, on account of which the United States may maintain an action for conversion, provided it appears on the trial, as is alleged in the petition and in the reply, that the lumber was in fact made from growing trees which were felled on the Indian reservation in question, and were cut into logs, and removed therefrom, in violation of law. Moreover, the government did not lose its right to

Digitized by Google

maintain an action for conversion on account of the wrongful removal of the logs from the reservation, the same having been cut from growing trees, by reason of the fact that it subsequently seized the logs, assumed the possession thereof, and entered into the contract aforesaid for driving them down the river to the city of Minneapolis. The doctrine is well settled that the recovery of the possession of property, otherwise than by judicial process, which has been wrongfully converted, does not deprive the true owner of his right to maintain an action of trover. In such a case the recovery of the property from the wrongdoer cannot be pleaded in bar to the action, but merely in mitigation of damages. Cattle Co. v. Hall, 33 Fed. 236; Bank v. Leavitt, 17 Pick. 1; Curtis v. Ward, 20 Conn. 204; Ewing v. Blount, 20 Ala. 694; Pierce v. Benjamin, 14 Pick. 356, 361; Sparks v. Purdy, 11 Mo. 219, 223.

The question does not arise upon this record whether, in the event of a recovery by the United States, the defendants will be entitled, by way of mitigation of damages, to an allowance for the services rendered by the defendants in driving the logs from the place of seizure to Minneapolis, and sawing them into lumber, whereby the value of the property was enhanced. No such question was considered by the circuit court, and no opinion on that point will be expressed by this court on the present occasion. The trial court decided the case upon the theory that the facts admitted by the pleadings disabled the United States from maintaining the present action, and in so ruling we think that the trial court erred.

It is further contended in behalf of the defendants in error that, although the ground upon which the trial court based its judgment was erroneous, yet that the judgment in their favor ought not to be disturbed, because the record discloses a misjoinder of causes of action, in that the Pine River Logging & Improvement Company and J. B. Bassett & Co. should have been sued separately for acts of conversion by them separately committed. There are two answers to this contention. The complaint which was filed by the United States does not disclose a misjoinder of causes of action. The allegations of the complaint are sufficient to show that all of the defendants were jointly concerned in the cutting and removal of the logs from the reservation, and the plaintiff may elect to rely for a recovery on the original act of conversion, rather than upon the sale of the lumber after the logs were sawed with the consent of the United States. A second reason why the judgment cannot be upheld on account of the alleged misjoinder of causes of action, even if that point was well taken, is that the judgment rendered by the circuit court is in such form that, if sustained, it would bar a subsequent suit against either of the defendants for the wrongful conversion of the property. The circuit court "ordered and adjudged * * * that the plaintiff * * * take nothing of the said defendants, the Pine River Logging & Improvement Company and Joel B. Bassett and William L. Bassett, * * * and that they, and each of them, do go hence without day." This is, without doubt, a final judgment on the merits; whereas, if the defendants were entitled to no greater relief than an order quashing the summons or dismissing the complaint because

Digitized by Google

separate causes of action against different defendants had been erroneously united in the same complaint, the judgment should have been so expressed. The trial court evidently intended to dispose of the case on its merits, and entered a judgment accordingly. No attention was paid to the plea in abatement, and no action by the trial court was predicated upon that plea. We think, therefore, that the judgment cannot be upheld on the ground last suggested. The judgment of the circuit court is accordingly reversed, and the case is remanded for a new trial.

(78 Fed. 325.)

STANDARD SEWING-MACH. CO. v. LESLIE.

(Circuit Court of Appeals, Seventh Circuit. February 11, 1897.)

No. 345.

1. PAROL EVIDENCE—CONSTRUCTION OF CONTRACT.
   Evidence of the situation of the parties, the subject-matter of the contract, and the circumstances under which it was entered into cannot authorize a construction which would make it conform to what the parties may have secretly intended, but failed to express, but only to explain the terms actually employed, if the language is of obscure or doubtful meaning.

2. CONSTRUCTION OF CONTRACT—PATENT RIGHTS.
   By a contract between a patentee of rotary shuttle sewing machines and a corporation, the patents were to be vested in a trustee; the corporation was "immediately to engage in and carry on with energy the business of making and selling sewing machines during the life of the contract, and shall make such number of machines as to keep the supply as nearly as practicable up to the demands of the trade"; the contract was to endure during the life of the patent, unless terminated by the corporation by giving written notice; the corporation was to pay a fixed royalty "upon each machine manufactured by it embodying the principles covered by the first party's patent," but was not obliged "to make rotary shuttle sewing machines like any model that has been or may be construed [constructed] or settled upon as a standard, but it may from time to time make such changes as may seem to it expedient," but no such alteration was to relieve it from paying royalties so long as the machine involved "any of the essential principles" covered by the patent; the corporation was to make monthly statements "of the number of said machines shipped from the factory," and make settlements accordingly; it was expressly stated that the patentee did not guaranty the validity of the patents; and the royalties were to cease whenever the patents should be decreed invalid by a court of competent jurisdiction. *Held*, that the corporation was not restricted to the manufacture of machines embodying the principles of the patent, or bound to pay royalties on all machines made, whether covered by the patent or not, so long as it did not terminate the contract by written notice, but was required only to make and pay royalties on machines sufficient to meet the demands of the trade for that machine, and that in an action for royalties it was entitled to show that the machines made and sold did not embody the principles of the patent.

In Error to the Circuit Court of the United States for the Northern District of Illinois.

The defendant in error, Arthur M. Leslie, brought an action in assumpsit against the plaintiff in error, the Standard Sewing-Machine Company, formerly the Leslie Sewing-Machine Company, upon the following contract:

Digitized by Google

"Whereas, Arthur M. Leslie and the Leslie Sewing-Machine Company, both of the city of Cleveland, Ohio, did upon April 1, 1884, enter into a contract touching the use of certain letters patent for improvements in sewing machines, under which contract said Leslie assigned to Charles H. Bulkley, as trustee to hold for both parties during the continuance of said contract, all his right, title, and interest in and to all United States letters patent which had been granted said Leslie for improvements in sewing machines, and all patents held by him on the rotary shuttle sewing machine, which said letters patent said trustee now holds in trust as aforesaid; and whereas, said parties wish to rescind said contract, and enter into a modified agreement in relation to the subject-matter thereof: Now, therefore, this agreement made this August 20, 1884, by and between said Arthur M. Leslie of the first part and the Leslie Sewing-Machine Company of the second part, witnesseth: (1) Said original contract of April 1, 1884, shall be, and the same is hereby, rescinded and canceled. (2) Said Charles H. Bulkley shall continue to hold said letters patent assigned to him by said first party in trust for the parties hereto under and in accordance with the terms of this agreement. Said first party further agrees to convey to said Bulkley upon the same trusts all letters patent which have been since said assignment, or which may hereafter be, granted to him for improvements on rotary shuttle sewing machines, and all improvements made or which may be hereafter made thereon. In case of the death of said Bulkley during the continuance of this agreement, the interest theretofore vested in him as such trustee shall be vested in such trustee as the then probate judge of Cuyahoga county shall appoint upon application of either party with notice to the other, and thereupon all the stipulations of this contract shall be carried out by the parties hereto as though no change had been made. (3) Said first party agrees to permit second party to take out such foreign patents as it may desire on said rotary shuttle and improvements (the invention of the first party) at any time made thereon, at the expense of second party, and all such foreign patents shall be the joint property of the parties hereto. (4) In consideration of this contract and of past services rendered by first to second party, second party hereby releases first party from all his existing indebtedness to it. (5) Second party hereby agrees to pay first party as royalty the sum of seven and one-half (7½) cents upon each machine manufactured by it embodying the principles covered by the first party's patent up to the number of one hundred thousand (100,000), and the sum of five cents (5) upon each such machine in excess of said number, said machines to be counted for this purpose on their shipment from the factory. Said royalties shall be paid in cash, and one thousand dollars ($1,000) thereof paid in advance to said first party. (6) Said first party shall not be held to guaranty the validity of said patents or any of them, or to protect said second party against infringement thereof, or against actions brought against it for infringements, but all royalties hereunder shall cease upon the date of a decree of any court of competent jurisdiction declaring the invalidity of said patent or patents. (7) Said second party agrees immediately to engage in and carry on with energy the business of making and selling sewing machines during the life of this contract, and shall make such number of machines as to keep the supply as nearly as practicable up to the demands of the trade, and this contract shall endure during the life of the patents issued in 1882, unless sooner terminated as hereinafter provided. (8) Said second party shall not be obliged to make rotary shuttle sewing machines like any model that has been or may be construed [constructed] or settled upon as a standard, but it may from time to time make such changes as may seem to it expedient; but no such alteration or change shall relieve second party from the payment of royalties as hereinafter provided, so long as the machine made by it involves any of the essential principles covered by the patent of the first party. (9) Second party shall render to first party once in each month a correct and true statement under oath of the number of said machines shipped from the factory, and make settlements of royalties with first party as follows, to wit, on October 1, 1884, and quarterly thereafter; and first party shall have the right to examine the books of the company on the 1st days of October, January, April, and July of each year during the continuance of this contract to satisfy himself as to the correctness of such monthly statements. (10) Second party shall have the exclusive right to make and sell machines under said patents as above provided during the term of this agreement. (11) Second party may terminate this contract upon giving written notice to the first party, and notifying said trustee that it has no further interest in said patents, and that the same may be reassigned to first party. In witness

Digitized by Google

whereof said parties have hereunto set their hands at Cleveland, O., the day and year above written.

Leslie Sewing Machine Company,
"By E. H. Hary, Sec. and Tr.
"By Frank Mack, President.
"Arthur M. Leslie."

At the trial it was proven that the $1,000 specified in the fifth clause of the contract had been paid, but that no other moneys for royalties had been paid. It was further proven that the plaintiff in error had manufactured 179,591 sewing machines between the date of the contract and the bringing of the action, which machines were like one or another of five models produced to the jury; and the plaintiff below offered expert testimony, which was received, tending to prove that each of the five models produced to the jury embodied some one or more of the principles contained in one or more of the patents issued to the defendant in error. The plaintiff in error, defendant below, gave evidence tending to prove that no "Leslie" machines were made by it after September 1, 1885, but only such as were known as the "Standard" machines; and thereupon called as witnesses certain mechanical experts, duly qualified as such, and propounded to each the question, in substance, whether the essential principles of the claims of the patents to Leslie, or any of them, were involved in the machines so manufactured by the company. The trial court, without objection by the plaintiff below, ruled the question to be immaterial, to which ruling a timely exception was made and duly preserved. In connection with that question it was proposed to prove by such witnesses that none of the machines manufactured, shipped or sold by it since January 1, 1887, involved the essential principles of any of the claims of the patents to Leslie, either in identical construction or by way of mechanical equivalent. This offer was ruled against by the trial court, and timely objection to such ruling was made and preserved. The defendant below further offered to prove that at the time of the contract in suit, and for a long time prior thereto, the Leslie machines made in accordance with the plaintiff's patent were unsuccessful in their operation, unpopular with the trade and the public, and that the business of their manufacture and sale had constantly dwindled, and that practically the business was at the point of failure when the contract was made. This offer was ruled against by the court, and an exception duly made and preserved. Many requests to charge with respect to the construction of the contract were preferred to the court and refused, but need not be here specifically stated.

The trial court charged the jury as follows: "My interpretation of that contract being that it was the duty of the defendant, if it chose to cease operations under that contract, to manufacture sewing machines under the patents or some of the patents owned by the plaintiff, it should exercise that option under the eleventh clause of the contract by serving notice and surrendering to the plaintiff the patents, or authorizing the trustee to surrender the patents to the plaintiff. It being entirely undisputed here in the evidence that there was no such action by the defendant, and it being undisputed that the defendant proceeded in the manufacture of sewing machines to an amount shown by the undisputed testimony, it is the view of the court, and you are so instructed, that the plaintiff is entitled to recover the royalties provided in the contract on the machines which are so shown to have been made; that is, on all of the machines shown to have been made by defendant under the testimony, without regard to variations appearing in the form of the machines as shown by the testimony,"—to which charge an exception was duly made and preserved. The court thereupon directed a verdict for the plaintiff below for royalties according to the contract upon all machines manufactured by the defendant. Such verdict was rendered, and judgment entered thereon, and a writ of error sued out to review the judgment.

Charles S. Holt, for plaintiff in error.

William Prentiss, for defendant in error.

Before WOODS, JENKINS, and SHOWALTER, Circuit Judges.

JENKINS, Circuit Judge, after this statement of facts, delivered the opinion of the court.

It is undoubtedly true that proof of the circumstances out of which the contract grew, and which surrounded its adoption, may

Digitized by Google

be proven to ascertain its subject-matter and the standpoint of the parties in relation to it, where the language of the contract is obscure or doubtful; but such evidence cannot be received to vary the contract by addition or substitution. West v. Smith, 101 U. S. 263–271; Union Stock-Yards & Transit Co. v. Western Land & Cattle Co., 18 U. S. App. 438, 453, 7 C. C. A. 660, and 59 Fed. 49. Possibly, under the doctrine of these cases, the trial court should have entertained the evidence with respect to the situation of the parties, the subject-matter of the contract, and the circumstances under which it was entered into. We need not, however, pause to consider this question, because such evidence could not avail to a construction of the contract which would conform it to what the parties may have secretly intended but failed to express, but only to explain the meaning of the words actually employed if the language used was of obscure or doubtful meaning. We find the instrument in question to be couched in plain and unambiguous language. It is therefore the best possible evidence of the intent and meaning of the parties. The provisions are not antagonistic, nor is the language obscure. There is, as we read the contract, no uncertainty whatever in respect to the object and extent of the engagement. We are therefore to look to the terms of the contract to ascertain the intention of the parties, and that we must find "from the entire contract, without ignoring or forcing from their true significance the plain and unequivocal words and expressions of other articles." Bast v. Bank, 101 U. S. 96; Crimp v. Construction Co., 34 U. S. App. 598, 606, 18 C. C. A. 595, and 72 Fed. 366, 371.

The defendant in error, the inventor of the patented improvements, manifestly desired to provide for the manufacture and sale of machines embodying the features of his inventions. It is matter of common knowledge that for many years sewing machines of many and different modes of operation had been in use and were upon the market, so that it was questionable whether, in the then state of the art, improvements could be effected which could be properly classed within the domain of invention or be deemed other than mechanical equivalents. Leslie was unwilling to guaranty the validity of his patented inventions, or to protect the company against liability in their use should they prove to infringe upon another's protected rights. This risk was assumed by the company, upon the condition, however, that the payment of royalty should cease when a competent court should declare the invalidity of the invention. It thus appears that the inventions of Leslie were not recognized to be of established merit, or to be such that a monopoly in their use was assured to the company. It was clearly, therefore, an adventure of doubtful outcome, depending in part upon the question whether a monopoly in the manufacture and sale of these inventions should be established, and therefore uncertain whether their manufacture and sale would prove remunerative. It was under these circumstances that this contract was made. We therefore naturally find that those who were to invest capital in their manufacture should seek to protect themselves, so far as

Digitized by Google

possible, against the risk assumed, by providing, as is done in the sixth clause of the agreement, that all royalties should cease upon the date of the decree of any court of competent jurisdiction declaring the invalidity of such patent or patents, and also by providing, as is done by the eleventh clause, that the company might terminate the contract at any time upon written notice, thereupon relinquishing all interest in the patents which had been assigned to a trustee in trust for the purposes of the contract. The company was willing to assume the risk of infringement upon other patented rights until the invalidity of the patents was declared, if payment of royalty should thereupon cease, and it had also the right to terminate the contract. This eleventh clause furnished the company another protection. Although the patents might be sustained, it was still problematical whether the inventions were such as to commend themselves to popular favor, and whether the manufacture and sale of machines embodying those inventions would prove pecuniarily remunerative. The company chose to bind itself to the manufacture of the Leslie machine during the terms of the patents, but reserved to itself the right to terminate the contract at any time when it deemed it advisable so to do.

By the seventh clause the company agreed "immediately to engage in and carry on with energy the business of making and selling sewing machines during the life of this contract, and shall make such number of machines as to keep the supply as nearly as practicable up to the demands of the trade, and this contract shall endure during the life of the patents issued in 1882, unless sooner terminated, as hereinafter provided." It is insisted for the plaintiff in error that this provision has reference to the making and selling of sewing machines generally, and is not limited to the manufacture of those conforming to the Leslie patent, and that the company was bound to manufacture sewing machines of different designs sufficient practically to supply the needs of the market, so that Leslie's inventions, if they should prove popular and valuable, might find a larger market. We think this a strained and unwarranted construction of the contract. We are unable to understand that the flooding of the market with machines of different construction could be beneficial to the marketing of Leslie's machine. Upon the contrary, it would be detrimental. Leslie was only concerned to supply the market with machines containing his own invention, not the devices of others. It was not only foreign to his purpose, but counter to his interest, to supply the market with other and competing manufactures. The limitation of the contract to the period of the life of the patent lends additional force to this construction, if any support were needed. The plain meaning of the compact is that the company should energetically pursue the manufacture of the Leslie machines so that the supply should not fall short of the demand for these machines. It does not follow, however, if there were a breach of the agreement in this respect,—which we do not understand to be charged,—that the damages arising from the breach are measured by the amount of royalty speci-

Digitized by Google

fied in the contract to be laid upon all machines made by the company. That is to say, if the company was prohibited to manufacture machines other than the Leslie machines, and violated its contract in that regard, we do not understand that the company would be liable to respond for the specified royalties upon all the machines they manufactured, because it does not follow, necessarily, that the company could have sold the Leslie machine to the extent that they might have sold machines of other character and embodying other inventions. We cannot, however, find in this contract any language or any intent to restrict the company to the manufacture and sale of Leslie machines. It is true the company agreed to carry on energetically the business of manufacturing Leslie machines sufficient to supply the demands of the market. That manufacture might be great or small, according to the popularity which the Leslie machines might attain, and according to their merit, as might be established by their practical use, and as the validity of the patents might be determined by the court. It is not to be assumed, in the absence of restrictive provisions, that the company bound itself to invest considerable capital in a manufacturing plant which must lie idle unless the Leslie machine should prove to be a valid monopoly and entitled to and obtain popular indorsement and demand. The company was indeed bound to manufacture the Leslie machine up to the demand of the market, but beyond that it was not restricted in the use of its plant. We not only do not find in this contract any word of exclusion or prohibition in this regard, but we discover language which, to our thinking, clearly recognizes this right. Thus, in the fifth clause of the contract the royalty is laid upon each machine manufactured by the company "embodying the principles covered by the first party's patent"; and in the eighth clause it is provided that the company shall not be obliged to make rotary shuttle sewing machines like any model that had been settled upon as a standard, but it had the right to make such changes as should seem to it expedient, provided that no such alteration should relieve the company from the payment of royalties as provided, "so long as the machine made by it involved any of the essential principles covered by the patent of the first party." Unless, under this contract, the company could rightfully make machines other than Leslie machines, this language is meaningless. If, as ruled below, the company must pay royalties upon all machines made by it so long as the contract was operative and until it was canceled by the act of the company, the language of these two clauses fulfills no office. These provisions are, then, mere surplusage. We have no right to so regard them. We must disregard a cardinal canon of construction to expunge them or to ignore them. They are not in conflict with any other term of the contract. They must be given full effect. That can only be done, in the absence of any words of exclusion or prohibition, by holding that the company had the right to engage in the manufacture of machines other than the Leslie machine. The provisions of the ninth clause clearly relate to a statement of the num-

Digitized by Google

ber of Leslie machines shipped, and not to those of another character, for Leslie was only interested in royalties upon machines manufactured according to his patents.

We fail to perceive the force of the interpretation of the trial court that it was the duty of the company, if it chose to cease operations under the contract and the manufacture of sewing machines under the patents owned by Leslie, to first exercise its option under the eleventh clause to terminate the contract. Undoubtedly, so long as the contract continued in force, the company was bound to manufacture the Leslie machines sufficient to meet the demands of the trade in that machine, but this does not prohibit the company from the manufacture of machines under other patents or of different construction; for to hold that, as we have before observed, would be to fly in the face of the express language of the fifth and eighth clauses of the contract. The company could terminate the contract whenever it found the business unremunerative, but, the contract continuing, it must meet the market demand for the Leslie machine. To the objection that under such construction the company could retain the exclusive control of the patents while refusing to supply the market demand for the Leslie machines, it may properly be answered that for such breach of the agreement the company would be answerable in damages, and if the remedy at law were inadequate equity would find a way, possibly by annulling the contract and compelling a reconveyance of the patents, to stay the threatened wrong. Courts of law, however, do not sit to relieve from improvident contracts, but to interpret and enforce the agreements which parties have themselves made. We are of opinion that the trial court erred in its exclusion of evidence which would tend to show that the machines manufactured did not involve any of the essential principles covered by the Leslie patents and in its direction of a verdict. The judgment will therefore be reversed, and the cause remanded, with directions to the court below to award a new trial.

(78 Fed. 332.)

APGAR et al. v. UNITED STATES.

(Circuit Court of Appeals, Seventh Circuit. November 9, 1896.)

No. 330.

1. APPEALS IN CUSTOMS CASES—FINDINGS OF BOARD OF APPRAISERS.

The circuit court of appeals will not review a finding of facts by the board of general appraisers, not controverted by new evidence in the circuit court, unless manifestly unsupported by the evidence or clearly against the weight thereof.

2. CUSTOMS DUTIES—CLASSIFICATION—"NUCOA BUTTER."

"Nucoa butter," made, by a process not clearly shown, from cocoanut oil, which process consists in part in pressing the oil in a solid state to eliminate the softer oils, then melting the remaining solid, and washing it with steam, is dutiable as "cocoa butterine," under paragraph 230 of the act of August 27, 1894, and is neither exempt from duty as "cocoanut oil," under paragraph

Digitized by Google

568, nor dutiable as an unenumerated manufactured article, under section 3, of said act.

Appeal from the Circuit Court of the United States for the Northern District of Illinois.

This was an application by Apgar & Co. for a review of the decision of the board of general appraisers affirming the action of the collector at Chicago in assessing duty upon certain imported goods. The circuit court affirmed the decision of the board, and the importers have appealed.

N. W. Bliss, for appellants.

John C. Black, U. S. Dist. Atty., and Oliver E. Pagin, Asst. U. S. Atty.

Before WOODS and SHOWALTER, Circuit Judges, and BUNN, District Judge.

BUNN, District Judge. This appeal involves the question of the proper classification of an article of merchandise imported by the appellants as "nucoa nut oil," under the act of August 27, 1894, which contains the following provisions: First, from the schedules of duty-paying articles: "230. Cocoa butter or cocoa butterine, three and one-half cents a pound." Second, from the free list: "568. Oils, * * * nut oil or oil of nuts, not otherwise specially provided for in this act, * * * palm and cocoa nut. * * *"

The foreign sellers, in the original invoice, gave to the goods the name of "nucoa butter," but, in brackets, gave what is claimed by appellants to be its real descriptive name, as "solidified cocoanut oil." The United States consul general at London certified the goods to be "solidified cocoanut oil." The statement by the shippers, certified by the local consul, described the goods as "nucoa butter." The goods were entered for consumption, and transported to Chicago, as "cocoanut oil," where the collector demanded a duty of 3½ cents per pound, under the above provision for "cocoa butterine." The importers paid this duty under protest, claiming the goods to be exempt under paragraph 568, as above, or, if dutiable at all, to be so at 20 per cent. ad valorem, under section 3, covering unenumerated manufactured articles. The case was referred to the board of United States general appraisers, at New York, where testimony was taken, and a report made affirming the action of the collector. No testimony was taken or offered on the hearing in the circuit court, where the decision of the general appraisers was affirmed, and so the case stands here upon the testimony taken before the board of appraisers, and their decision thereon, affirmed by the circuit court. In the opinion given by the board, it is said:

"The merchandise is invoiced as 'nucoa butter.' It is used chiefly by confectioners as a substitute for cocoa butter. It was assessed for duty, as 'cocoa butterine,' at 3½ cents a pound, under paragraph 230, act of August, 1894, and is claimed to be exempt from duty under paragraph 568, as cocoa nut oil, or to be dutiable at 20 per cent. under section 4. In a circular submitted in evidence, the following description appears: 'Nucoa is a hard butter, extracted from sweet nuts, prepared by patent process, its melting point being 87° F. It is as good and genuine an article for chocolate thinning as cocoa butter itself, and presents

Digitized by Google

a saving of nearly 50 per cent. In caramels it is being successfully used by some of the largest makers instead of cream, and renders wax and wrappers unnecessary. Nucoa must not be confounded with ordinary cocoa butter substitutes. It is an exceptionally good article, sells freely in Europe, and has already been taken hold of by the American trade.' The manufacturers make affidavit that the following is the process of manufacture: 'Nucoa, prepared according to British patent No. 16,854, 1892: The cocoanut oil is placed, in a solid condition, in hydraulic presses, and submitted to a second pressing at a suitable temperature, until the soft oils are expressed from it. We then take the hard oil remaining, and refine it by carefully washing it with steam, in order to remove its characteristic odor, as is more particularly described in the aforesaid patent. This extra-refined cocoanut oil is then colored, to make it more pleasing to the eye, with a little yellow coloring matter, dissolved in stearic acid.' It is evident, from this description, that the merchandise is a product of cocoanut oil, rather than the cocoanut oil of commerce. We find that it is not cocoanut oil, and overrule the claim that it is exempt from duty, under paragraph 568. As nucoa butter is a cocoa butter substitute, we find, in accordance with G. A. 1, 174, that it is cocoa butterine, and overrule the claim that it is dutiable at 20 per cent., under section 3. Reference is made to the principle held in the classification of lanoline (Movius v. U. S., 66 Fed. 734); and of concentrated cherry juice (Fed. Rep. C. V. p. 984)."

There is also in the record an affidavit by one of the directors of the manufacturing company, which says:

"The product 'nucoa' is manufactured solely from cocoanut oil roughly after the following manner: The crude cocoanut oil is submitted to the temperature of 70° F., and then pressed by suitable means until all the oils liquid at that temperature, or most of them, are removed. The remaining hard fat is then further refined by melting it at a higher temperature, and washing it with steam, until the volatile oils or ethers are expelled. This refined oil is then tinted with yellow color, about one part to 5,000, to make it more pleasing to the eye, and is then run into molds, and allowed to cool. It sets hard upon cooling, and in this condition is exported."

The case here turns upon the question of fact whether the article is cocoa butterine, as found by the board of general appraisers, or is cocoanut oil, within the meaning of paragraph 568. It appears, from the evidence, that, in preparing this merchandise for the exportation to America, it is submitted to a first pressing, of which no details are given, and to a second pressing, of which partial details appear, and of the effect of which pressings this court cannot well judge, to say nothing of the process under the English patent, the effect of which, in reducing the article to the resultant article, nucoa, is not given. How much effect these things may have in reducing the article from a state properly denominated "cocoanut oil" to a substance more nearly allied to a product of cocoanut oil, and properly denominated "cocoa butterine," this court is not in so good a position to judge as was the board of general appraisers, who heard the evidence, and had, presumably, more expert knowledge of the subject. In a proper case, no doubt, this court may go back of the decision of the board of general appraisers and the circuit court, and review the case upon the evidence, and, if need be, overrule their decision. But it requires a clear case to enable the court to do that. This court ought not, and will not, review a finding of facts made by the board of general appraisers and not controverted by new evidence in the circuit court, except it be manifest that the decision of the board of appraisers is unsupported by the evidence, or is clearly against the weight of evidence. See In re White, 53 Fed. 787; U. S.

Digitized by Google

v. Van Blankensteyn, 5 C. C. A. 579, 56 Fed. 474; In re Muser, 49 Fed. 831.

In this last case Judge Lacombe very properly says:

"It was plainly contemplated by the framers of the act that the board would sit as experts to decide in a summary manner questions of value and classification arising under the tariff laws, reaching their decision from their own expert knowledge, and from the evidence submitted to them, or such as they might obtain."

We are unable to say that the decision of the board of general appraisers is either unsupported by the evidence or is opposed to weight of evidence. On the contrary, we are of opinion that the finding of facts was justified by the evidence in the case, and the decision of the circuit court is affirmed.

(78 Fed. 334.)

UNITED STATES v. DOMINICI et al.

(Circuit Court of Appeals, Second Circuit. January 7, 1897.)

CUSTOMS DUTIES—REIMPORTATIONS—IDENTIFICATION—TREASURY REGULATIONS—BOXES AND "SHOOKS."

The circular letter of the secretary of the treasury of October 20, 1890, continuing in force articles 381–383 of the treasury regulations of 1884, prescribed the regulations under which proof should be made of the identity of American articles reimported, under paragraph 493 of the tariff act of 1890. Such regulations apply to boxes imported filled with fruit, which have been exported from the United States in the form of shooks, and proof of the identity of such boxes with the shooks exported, furnished in any other form than that prescribed by such regulations, will not entitle the boxes to free entry. 72 Fed. 46, reversed.

This is an appeal from a decision of the circuit court (72 Fed. 46), Southern district of New York, reversing a decision of the board of general appraisers, which had affirmed a decision of the collector of the port of New York, assessing duty on certain boxes containing oranges and lemons, and imported into this country while the tariff act of 1890 was in force, the assessment being made under paragraph 301 of that act, which imposes "a duty of 30 per cent. ad valorem upon the boxes or barrels containing said oranges, lemons or limes." There is no question that, if the boxes are made of shooks not of American manufacture, the rate of duty is correct; but it is contended that these boxes are entitled to free entry.

Max J. Kohler, Asst. U. S. Atty.

C. B. Smith, for appellees.

Before LACOMBE and SHIPMAN, Circuit Judges.

LACOMBE, Circuit Judge. Paragraph 493 of the act of October 1, 1890, which is included in the free list, and upon which the importers rely, reads as follows:

"Articles, the growth, product and manufacture of the United States, when returned after having been exported, without having been advanced in value or improved in condition by any process of manufacture or other means; casks,

Digitized by Google

barrels, carboys, bags and other vessels of American manufacture exported filled with American products, or exported empty and returned filled with foreign products, including shooks when returned as barrels or boxes; * * * but proof of the identity of such articles shall be made, under general regulations to be prescribed by the secretary of the treasury; and if such articles are subject to internal tax at the time of exportation, such tax shall be proved to have been paid before exportation and not refunded."

A shook is defined in Webster's Dictionary as: "(a) A set of staves sufficient in number for one hogshead, cask, barrel, and the like, trimmed and ready to be put together; (b) a set of boards for a sugar box." It is not disputed that the word, as used in the statute, covers a set of boards for a box for lemons or oranges. The board of general appraisers found that some of the shooks reported by the appraiser to be of American production or manufacture were such in fact, and that the other articles not so reported were of foreign manufacture and production. It further found that the importers had failed to furnish any proof of the identity of any of the articles in question with those originally exported, as required by the regulations of the secretary of the treasury made pursuant to law; wherefore the board found the issue of identity against the importers in each case, and sustained the decision of the collector.

The importers contend that no regulation of the secretary of the treasury applicable to proof of identity of shooks has been prescribed; and that, even if one had been prescribed, compliance with it is not necessary to entitle to free entry. The judge who heard the cause in the circuit court, and decided it orally upon the trial, seems to have felt constrained by an earlier decision of the same court to the conclusion that no regulation applicable to shooks had been prescribed. It is thought that the record presented here is more complete than it could have been in the earlier case. Certainly it leads us to an opposite conclusion. The provisions of paragraph 493 of the act of 1890, quoted above, are a reproduction in the same terms of paragraph 649 of the tariff act of 1883; and by a circular letter of the secretary of the treasury, issued promptly (October 20, 1890) after the passage of the new act, certain articles of the treasury regulations of 1884 touching proofs of identity were continued in full force and effect. The pertinent paragraphs of the regulations are as follows:

"Art. 381. Other barrels, casks, carboys, bags and vessels of American manufacture, on which no drawback has been allowed, exported filled with American products, or exported empty and returned filled with foreign products, including shook when returned as barrels, or boxes, and bags other than of American manufacture, in which grain shall have been actually exported from the United States, returned empty, are entitled to admission free of duties; but proof of the identity of such articles must be made, and if any of them were subject to internal tax at the time of exportation, such tax shall be proved to have been paid before exportation and not refunded. Rev. St. § 2503; Act. Feb. 8, 1875 (18 Stat. 307); §§ 2839, 4260, 4572, 4594, 4760; Circulars, October 25, 1879, and February 17, 1875.

"Art. 382. Before such entry the following proofs shall be required by the collector of customs:

"First. A certificate from the shipper, executed in triplicate (and attested by a consul or consular agent of the United States) in the following form:

Digitized by Google

" 'Foreign Certificate Relating to Bags or Other Vessels Re-imported.

" 'I hereby certify under oath, that, to the best of my knowledge and belief, the *——— hereinafter specified, are truly of the manufacture of the United States, †——— or were exported from the United States filled with *——— and that it is intended to reship the same to the port of ———, in the United States, ‡——— on board the ———, now lying in the port of ———. I further certify that, to the best of my knowledge and belief, the actual market value of the things herein named, at this time and in the form in which the same are to be exported to the United States, is as follows: § ——— ———.

" 'Sworn to before me this ——— day of ———, 18—.'

"*Name the articles.

"† If the packages are empty, insert statement of the facts as 'and were exported from the United States filled with the produce of that country.'

"‡ If the packages contain foreign merchandise, insert 'filled with' and a description of the merchandise they contain.

"§ This blank is to be filled only when the merchandise contained in the package, is subject to a duty ad valorem.

"The consul will be required to verify the facts alleged in this certificate, so far as practicable, and to furnish information to the proper officers of the customs in case its correctness may be questioned.

"If it is impracticable to obtain the consular attestation, the department will consider that of some other proper officer having a seal and authorized to take affidavits, on special application, made by the parties concerned, through the proper collector of customs.

"Such certificate may be accepted in lieu of an invoice for empty articles. But if the articles are filled with foreign merchandise, their value must be separately stated in the invoice, and the certificate be attached to or made a part of the invoice. If the certificate cannot be produced at the time of the entry, bond may be taken therefor in a penalty equal to twice the duties, to run for six months.

"Second. A declaration in the entry by the importer of the name of the exporting vessel, the date of the shipper's outward manifest, and the marks and numbers on the articles for which entry is sought. The marks and numbers should be such as to prove beyond any reasonable doubt, the identity of the articles with those entered on the outward manifest. If the articles are not marked with the name of the firm to which they belong, and with consecutive numbers, the name of the firm alone, or of its private initial letter or letters, may be accepted in the discretion of the collector. If they are returned to any port other than that from which they were exported, a copy of that portion of the outward manifest relating to the articles, certified by the collector of customs at the port whence they were exported, must be produced as well as a certificate from the same officer, countersigned by the naval officer, if any, that he is satisfied no drawback or bounty has been paid thereon.

"Third. An affidavit by the importer (which affidavit must be attached to the entry) that no drawback or bounty has been allowed on the exportation of the articles for which free entry is claimed, and also that the articles mentioned in the entry are, to the best of his knowledge and belief, truly and bona fide manufactures of the United States, or were bags exported therefrom filled with grain."

"Fifth. Verification by actual examination by the proper officer of the appraiser's department with an endorsement of the fact of examination, and also of the fact whether in his opinion the articles are of domestic or foreign manufacture, as the case may be.

"On the production of the above proofs the articles may be admitted to free entry, if the collector shall be satisfied that they are entitled to such entry, under the laws cited in the preceding articles, and that no drawback or bounty has been allowed thereon.

"No evidence of declaration at the time of exportation of intent to return the articles empty will be required.

"Art. 383. Such bags and vessels exported to be returned should, when practicable, be marked or numbered, in order that they may be identified on their return; and the marks or numbers should appear on the manifest upon which they are exported. Section 3314."

The reasonableness and propriety of these regulations is not questioned; indeed, it is difficult to see on what ground it could be

Digitized by Google

claimed that they were unreasonable, or contradictory of the provisions of the statute. The contention of the importers is that they are inapplicable to shooks which when exported do not leave this country filled with anything, and in a strictly technical sense do not leave here empty, since they do not leave as barrels or boxes. This is hypercriticism. With equal literalness it might be said that the barrels or boxes returned did leave here "empty," since the shooks of which they are composed did not at that time inclose anything, but were themselves packed in bundles. But this is not so much a question of juggling with words as it is of practical common sense. Article 381 calls attention to the fact that besides the other barrels, carboys, bags, etc., of American manufacture, "shooks, when returned as barrels or boxes," are free, but proof of identity must be made, and article 382 begins with a statement that before "such" entry—i. e. of any of the articles enumerated in the preceding article—the "following proof shall be required by the collector." Next comes a form of consular certificate relating to "bags and other vessels, reimported." Certainly the word "vessel" is broad enough to cover boxes or barrels. This certificate is manifestly elastic, for it contains blanks to be filled appropriately to the facts. Because in the annotations indicated by the asterisks and dagger, suggestions are made as to the form of words to be used when the articles were exported from the United States filled with something, it by no means follows, as the appellee contends, that the regulation requires that the blank spaces shall be filled "no otherwise." The statute accords free entry to barrels, carboys, etc., which are exported empty, and returned filled with foreign products. All that is necessary to make the certificate cover such articles is to strike out the conjunction "or" and the words "filled with," and write the word "empty" in the third blank space. Or, if we are to stick in the bark of a strictly literal interpretation, we need not even strike out the words "filled with"; it will be sufficient to write into the blank space the word "nothing." It is a curious commentary on the effects of excessive literalism that appellee's counsel, who has evidently analyzed article 382 most carefully, has fallen into the error of supposing that the note prefixed with the double dagger† refers to the contents of the vessels when exported from this country, whereas in fact it refers to the contents of the vessels when they leave the foreign port on their way back to the United States. It is difficult to conceive how an intelligent person could find any difficulty about filling up the blank certificate so as to retain all its essential requirements and make it apply to a lot of boxes made of American shooks. Certainly the shipper of the articles which are the subject of this appeal found no such difficulty. To some of the shipments there is found attached a consular certificate duly executed, as follows:

"I, Ferdinando Ferro, duly-authorized agent of Marino, of Palermo, do hereby certify under oath that to the best of my knowledge and belief the 1,172 boxes or barrels mentioned in the annexed invoice are made of shooks of the manufacture of the United States, and were exported from Bangor by Andrea Lovice, per Andrea Lovice, on the 9th September, 1890, and that it is intended to reship the same, filled with fruits, to the port of New York, in the United States, on board

Digitized by Google

the steamship Caledonia, lying in the port of Palermo. I further certify that the actual market value of said fruit, boxes, or barrels is as stated in the annexed invoice."

This carefully conforms to the requirements of the regulations touching the consular certificate.

It is not disputed that upon the record before this court it appears that the proof of identity required by the treasury regulations was not furnished, but the importers insist that the furnishing of such proof is not a prerequisite of free entry if they can show to the court in some other way that their shooks are in fact of American manufacture. We are unable to assent to any such proposition. Congress expressly laid a duty upon boxes or barrels containing oranges or lemons. In withdrawing any particular kind of boxes from the obligation to pay that duty it could couple the privilege of free entry with any restrictions it chose. By the paragraph (493) of the act above quoted it has coupled that privilege with the requirement that proof of identity shall be made under general regulations to be prescribed by the secretary of the treasury. The case is very different from those cited on the appellee's brief, where the regulations under consideration had been made under the general power of the secretary as head of the treasury department to regulate the administrative details of customhouse business. There has been no attempt to defeat the provisions of the statute by an arbitrary refusal to prescribe any regulations at all, nor by the prescribing regulations which it is impossible to comply with. The rights secured to the importer by the statute are in no wise modified or interfered with or injuriously affected by the regulations, which are nowhere suggested to be contradictory of the statute, or unjust, unfair, or even unreasonable. "When a mode of proof is prescribed by the terms of the law, or by its fair interpretation, no other than the statutory evidence can be admitted." Dutilh v. Maxwell, 2 Blatchf. 541, Fed. Cas. No. 4,207. Here congress has expressly provided for one mode of proof, and for one only, in the very same sentence in which it provides for free entry, and it is difficult to understand on what theory it could be held that this express provision as to proof is not of the essence of the exemption from duty which that sentence accords to the importer who may bring his importations within its terms. See, also, Gauthier v. Bell, 10 Fed. Cas. 103.

Inasmuch as it is conceded that proof of identity was not made under the regulations which the statute called for, the decision of the circuit court is reversed.

Digitized by Google

(78 Fed. 339.)

UNITED STATES v. DUCAS.

(Circuit Court of Appeals, Second Circuit. January 7, 1897.)

CUSTOMS DUTIES—CLASSIFICATION—ACETATE OF COPPER.

Acetate of copper, though a variety of verdigris, and known commercially as "pure or distilled verdigris," was dutiable under paragraph 76 of the tariff act of 1890, as a chemical compound, and was not entitled to free entry under paragraph 749 of the same act, as verdigris or subacetate of copper. 71 Fed. 954, reversed.

This is an appeal from a decision of the circuit court, Southern district of New York (71 Fed. 954), reversing a decision of the board of general appraisers, which affirmed the action of the collector of the port of New York in assessing duty on certain imported merchandise.

James T. Van Rensselaer, for the United States.

Albert Comstock, for appellee.

Before LACOMBE and SHIPMAN, Circuit Judges.

LACOMBE, Circuit Judge. The article imported is acetate of copper. The collector assessed it for duty under paragraph 76, which imposes 25 per cent. ad valorem on "products or preparations known as alkalies, * * * and all combinations of the foregoing and all chemical compounds and salts, not specially provided for in this act." The importers protested, claiming it was entitled to free entry under paragraph 749, which reads: "749. Verdigris, or subacetate of copper." The board of appraisers found, and it is conceded, that the article is acetate of copper; that it is a chemical salt, and, of course, a chemical compound; and that it is not subacetate of copper. The testimony produced by the importers shows that there are several kinds of verdigris known in trade and commerce in this country; 10 different varieties, says one witness. These differ in purity, in dryness, in form, but commercially they are all spoken of as verdigris. Among them is the subacetate of copper, and also the article here imported. The witness called by the government, speaking from a business experience of 25 or 26 years, testifies that commercial verdigris included different varieties of subacetate of copper, which differed slightly in the presence of acetic acid or copper; and that there is also a neutral acetate of copper, which is known by the term "pure or distilled verdigris." The witness further testified that when people in trade asked for "commercial verdigris," or simply for "verdigris," they would be given the subacetate; when they want the pure, they ask for "distilled" or "pure verdigris"; but he admitted that if any one should come into his place, and ask for a sample of every grade of verdigris that he had, he would include both the "commercial" and the "distilled." There is in reality no conflict of testimony. Both acetate of copper and subacetate of copper are known in commerce as "verdigris," but they are different varieties of verdigris, of different purity and grade. If the word "verdigris" is used in its broadest mean-

Digitized by Google

ing, it will include the acetate of copper, such as was imported in this case; if used in a more restricted sense, it may or may not include this variety.

In what sense, then, did congress use the word? Examination of the statutes gives a conclusive answer to this question. In the Revised Statutes (section 2504, Schedule M, re-enacting an act of 1861) the broad general provision for all chemical compounds and salts does not appear. Many different chemical compounds and salts, however, are provided for either specifically by name, or by inclusion in general classes, not as comprehensive as the "chemical compound" group. There is a provision making certain enumerated acetates dutiable, and among them the acetate of copper, and in the same act the free list includes "verdigris, or subacetate of copper." Here is a plain distinction drawn by congress between the two substances,—acetate and subacetate. The one which, although a variety of verdigris, is known to the trade as "pure or distilled verdigris," is assessed for duty; and the other, also a variety of verdigris, and known as "commercial verdigris," is put on the free list. The article thus put on the free list is the article which congress calls "verdigris," making the scope of that word entirely plain by coupling it with the defining phrase "or subacetate of copper." Under this act there could be no possible doubt how to classify the present importation. It would pay duty as an acetate of copper, because, although recognized in commerce as one of the verdigris family, it was not the member of that family which congress had designated as duty free.

In the tariff act of 1883 there was a change of phraseology. Several of the minor classifications of various chemical compounds disappeared from the duty schedules; among them, the provisions for acetates of ammonia, baryta, copper, iron, lead, etc. And for the first time in a tariff act we find the comprehensive phrase, "all chemical compounds and salts, by whatever names, and not specially enumerated or provided for in this act." Manifestly, the acetate of copper, having lost its old classification, with acetates of baryta, iron, lead, etc., would go into this broad group, unless it were elsewhere specially provided for. Being a variety of verdigris, it would come within that classification, if congress had made it broad enough to cover all varieties of verdigris. But congress seems to have been careful to restrict the privilege of free importation to the same variety of verdigris to which it had accorded it before. The paragraph of the free list in the act of 1883 reads: "635. Uranium, oxide of, verdigris or subacetate of copper." The failure to strike out the qualifying description "subacetate of copper" is most significant. While the tariff of 1883 was in force, the treasury department made a decision upon "distilled verdigris or acetate of copper," which is the same article in question here, classifying it among the "chemical compounds and salts." Synopsis Treas. Dec. No. 8,593, Dec. 23, 1887. The contemporaneous interpretation of tariff acts by executive officers charged with the duty of acting under such statutes may be considered in construing such legislation; and it may be presumed that congress had this decision of the

Digitized by Google

treasury department in view when it passed the act of 1890. The pertinent paragraphs of that act have already been quoted. They are not materially different from those in the act of 1883. It must be assumed then that congress, when carefully retaining the same phrase, "verdigris or subacetate of copper," which it had used in the two tariff acts immediately preceding the act of 1890, intended to give free entry only to the same article which had been accorded such privilege under those earlier acts. The decision of the circuit court is reversed.

(78 Fed. 341.)

FLAGLER v. KIDD et al.

(Circuit Court of Appeals, Second Circuit. January 13, 1897.)

1. DISTILLED SPIRITS—REIMPORTATION—TAX.
   Distilled spirits withdrawn from bond under Rev. St. § 3330, which authorizes withdrawals for export without payment of the internal revenue tax, and forbids the relanding of the goods in the United States, cannot be reimported on payment of the original tax, pursuant to section 2500. 54 Fed. 367, reversed.
2. REVIEW ON ERROR—BILL OF EXCEPTIONS—FINDINGS OF FACT.
   Where there is no bill of exceptions in a case tried by the court, only the sufficiency of the facts found to support the judgment can be considered on error.
3. SAME—GENERAL ASSIGNMENTS—WHEN CONSIDERED.
   The rule that assignments pointing out no particular error will not be reviewed may be disregarded in case of plain error where the merits have been fully considered below, and discussed in the brief of one of the parties.

In Error to the Circuit Court of the United States for the Northern District of New York.

W. A. Poucher, U. S. Atty., for plaintiff in error.
Hale, Bulkeley & Tennant, for defendants in error.

Before WALLACE, LACOMBE, and SHIPMAN, Circuit Judges.

WALLACE, Circuit Judge. This is a writ of error to the circuit court for the Northern district of New York by the defendant in that court to review a judgment for the plaintiffs. The action was brought against the defendant, as collector of customs of the port of Suspension Bridge, to recover damages for the seizure and detention by him of 65 puncheons of spirits, the property of the plaintiffs. The action was tried before the court without a jury, a trial by jury having been waived by the written stipulation of the parties; and in ordering a judgment for the plaintiffs the judge made and filed special findings of fact. There is no bill of exceptions, consequently the review can only extend to the consideration of the sufficiency of the findings of fact to support the judgment. Insurance Co. v. Boon, 95 U. S. 117. The assignments of error are defective, because they merely state that the judgment should have been for the defendant instead of the plaintiffs, and that neither the complaint nor the findings state any good cause of action. They fail to point out any "particular error asserted and intended to be

Digitized by Google

urged," as is required by the rule. As was said by the court of appeals for the Seventh circuit (Grape Creek Coal Co. v. Farmers' Loan & Trust Co., 12 C. C. A. 350, 63 Fed. 891), "an assignment of errors cannot be good if it is necessary to look beyond its terms to the brief for a specific statement of the question to be presented." See, also, Oswego Tp. v. Travelers' Ins. Co., 17 C. C. A. 77, 70 Fed. 225; Doe v. Mining Co., 17 C. C. A. 190, 70 Fed. 455. We are very reluctant, in a case of respectable importance, to deny a review upon the merits of the controversy by a rigid adherence to the rule. As the merits were fully presented in the court below, and considered in its opinion (54 Fed. 367), and are fully discussed upon the brief of the defendant in error, and as the enforcement of the rule is discretionary with the court, and in case of plain error will be relaxed, we have concluded to disregard the objection.

It appears by the findings of fact that in July, 1884, the plaintiffs withdrew the spirits from a bonded warehouse at Des Moines, Iowa, for export to Canada, without paying the internal revenue tax thereon, and complied with all the requirements prescribed by the statutes and regulations in that behalf, intending to send them to New York City via Windsor, Canada, and pay the tax at New York City. When the spirits arrived at Windsor, they were taken out of the cars in which they had been shipped, and placed in a warehouse under the charge of Canadian customs officers. They remained there from July 12 to August 16, 1884, and were then shipped by the plaintiffs, in cars under the seal of the consul of the United States at Windsor, invoiced to the collector of the port at New York. When they arrived at Suspension Bridge, which was August 18, 1884, they were seized and detained by the defendant, acting under instructions from the secretary of the treasury, upon the ground that they had been improperly withdrawn from the warehouse at Des Moines, and there had been no exportation of them. On October 28th they were released by the defendant, upon the giving of a bond by the plaintiffs for exportation, and payment of certain charges for storage, etc. The court found that the plaintiffs were at all times ready and willing to pay the internal revenue tax upon the spirits, and that in consequence of the seizure and detention they sustained damages in the sum of $2,526.97. Upon these facts the court decided as matters of law that the seizure and detention of the spirits were wrongful and unlawful, and that the plaintiffs were entitled to recover their damages.

It appears by the opinion of the judge of the circuit court that judgment was awarded to the plaintiffs upon the legal theory that the spirits had been withdrawn from the warehouse for exportation, and the plaintiffs were entitled to reimport them upon paying a duty equal to the original revenue tax under the provision of the act of congress of July 28, 1866, entitled "An act to protect the revenue and for other purposes," and reproduced in the Revised Statutes as section 2500, and which reads as follows:

"Upon the reimportation of articles once exported of the growth, product or manufacture of the United States, upon which no internal revenue tax has been assessed or paid, or upon which such tax has been paid and refunded by allowance or

Digitized by Google

drawback, there shall be levied, collected and paid a duty equal to the tax imposed by the internal revenue laws upon such articles."

The provision for withdrawing distilled spirits from warehouse is section 3330 of the Revised Statutes, and reads as follows:

"Distilled spirits may be withdrawn from distillery bonded warehouses, at the instance of the owner of the spirits, for exportation in the original casks, in quantities of not less than one thousand gallons, without the payment of tax under such regulations, and after making such entries and executing and filing with the collector of the district from which the removal is to be made such bonds and bills of lading, and giving such other additional security as may be prescribed by the commissioner of internal revenue, with the approval of the secretary of the treasury; provided, that bonds given under this section shall be canceled under such regulations as the secretary of the treasury shall prescribe; and provided further, that the bonds required to be given for the exportation of distilled spirits shall be canceled upon the presentation of satisfactory proof and certificates that said distilled spirits have been landed at the port of destination named in the bill of lading, or upon satisfactory proof that after shipment the same were lost at sea without fault or neglect of the owner or shipper thereof. * * * Every person who intentionally relands within the jurisdiction of the United States any distilled spirits which have been shipped for exportation under the provisions of this act * * * shall be fined * * * and imprisoned * * *; and all distilled spirits so relanded * * * shall be forfeited to the United States."

The question in the case is whether these spirits were withdrawn for exportation within the meaning of section 3330. If they were not, it is immaterial that they may have been reimported. It is quite inadmissible to construe section 2500 as authorizing the reimportation of spirits or any other articles upon which an internal revenue has not been paid by reason of a fraudulent or illegal evasion. It cannot be construed as intended to facilitate a fraud upon the revenue, which the act of which it is a part was enacted to protect. If the spirits were not withdrawn for exportation, they were lawfully seized by the defendant, because they were forfeited to the United States.

The statutes of congress, in force in 1884, are carefully devised to prevent the evasion of the taxes upon distilled spirits. The manufacture is at all times subject to the inspection of the officers of internal revenue. The spirits must be drawn off into receiving cisterns at stated intervals, and on the third day after be drawn into casks and removed directly to a bonded warehouse in charge of a government storekeeper. There they are to be stored until withdrawn. The tax must be paid within three years after the date of entry if they are not withdrawn, and, if they are withdrawn, must be paid before their removal. Their removal from the warehouse otherwise than in compliance with law is made a criminal offense, and forfeits them to the United States. They can only be withdrawn without payment of tax when withdrawn for exportation pursuant to the terms of section 3330.

The findings of fact do not disclose whether or not the plaintiffs intended to unload the spirits at Windsor, and leave it wholly to inference whether they were unladen and stored there voluntarily, or because of the interposition of the Canadian customs officials. But as the findings state that the plaintiffs intended to remove them to New York, and pay the tax there, and as the only tax they could pay there was the duty which could be levied by the collector of

Digitized by Google

that port under section 2500, it may be fairly inferred that the plaintiffs intended to have them unladen at Windsor, and consigned thence to the collector. In the view which we have reached, however, the fact is not material.

Ordinarily, goods are exported when they are carried out of the country for the purpose of being transferred to a foreign situs. Goods en route from one place to another in the United States are not exported merely because, while in transit, in cars or vessels, they may be temporarily outside the boundaries, or within the boundaries of a foreign country. Conversely, goods are imported when they are brought within the country with intent to land them here. The intent characterizes the act, and determines its legal complexion. U. S. v. Vowell, 5 Cranch, 368; The Mary, 1 Gall. 206, Fed. Cas. No. 9,183; The Boston, 1 Gall. 239, Fed. Cas. No. 1,670. In the absence of language in the statute indicating a contrary intention, it would be assumed that in section 3330 congress used the term "exportation" in the sense thus attributed to it, and consequently it might well be urged that the section should be interpreted as authorizing a withdrawal of spirits without payment of tax when it was the purpose of the owner to transfer them to a foreign country, and give them a temporary situs there, notwithstanding he may all the time have intended to subsequently remove them back again to this country, and reimport them upon the payment of a duty equal to the original revenue tax. But the statute itself denounces such an interpretation by making it criminal to "intentionally reland" within the jurisdiction of the United States distilled spirits which have been shipped for exportation, and declaring them forfeited to the United States. Articles can be relanded without having been exported, but they cannot be reimported without being relanded; and the term includes both the cases. The language, in effect, forbids the reimportation of spirits upon which the tax has not been paid when they have been withdrawn from warehouse, and does not rationally permit a less comprehensive import to be given to it. If the spirits have been shipped for exportation, it matters not whether they have been actually exported or not. If they are intentionally relanded, the penalty is incurred. Unless this language is ignored, the statute cannot mean to permit the withdrawal of spirits for an exportation which is to be followed by a reimportation. The provision may be designed to reach a case where spirits might be warehoused, and before the expiration of the three years from entry within which the tax must be paid be withdrawn for exportation, and then reimported, thus obtaining an indefinite extension of the time of paying the tax. This part of the section is one of the stringent provisions calculated to enforce a strict compliance with all the requirements of the law taxing distilled spirits. We are unable to doubt that the spirits in controversy were properly seized by the defendant, and that the court below should have ordered judgment for the defendant. The judgment is reversed, with costs.

Digitized by Google

(78 Fed. 345.)

UNITED STATES v. MATHEWS et al.

(Circuit Court of Appeals, Second Circuit. February 1, 1897.)

CUSTOMS DUTIES—CLASSIFICATION—NEEDLE CASES.

Coverings or cases made of silk, leather, or paper, and containing needles, such cases being ornamental articles, arranged as permanent receptacles for the needles, are dutiable under the tariff act of 1890, according to their component material of chief value, as manufactures of silk, leather, or paper, and are not entitled to free entry, as usual coverings of the needles, under section 19 of the act of June 10, 1890.

Appeal from the Circuit Court of the United States for the Southern District of New York.

Henry C. Platt, Asst. U. S. Dist. Atty.

Everet Brown, for appellees.

Before WALLACE, LACOMBE, and SHIPMAN, Circuit Judges.

SHIPMAN, Circuit Judge. In the year 1891, the firm of Mathews, Blum & Vaughan imported into the port of New York sundry invoices of articles which they styled coverings or cases containing needles. These cases were made either of silk or of leather or of paper, but were not like the well-known folded paper covers in which needles are wrapped. The collector assessed the cases as entire articles, according to their component material of chief value, either as manufactures of paper, under paragraph 425, or manufactures of leather, under paragraph 461, or manufactures of silk, under paragraph 414, of the act of October 1, 1890. The importers protested against this assessment, upon the ground that needles are free under paragraph 656 of the tariff act of 1890, and that the cases were usual coverings of the needles, and therefore, under section 19 of the act of June 10, 1890, were also free of duty. The action of the collector was affirmed by the board of general appraisers, who found that needle cases of this general character are specific articles of merchandise, and, although they are used for holding needles imported in them, they are not usual coverings, but are articles designed for use otherwise than in the bona fide transportation of needles in the United States. The board also found, upon a similar protest, which, in their opinion, related to the same substantial facts as those in this appeal, that the cases "are arranged as permanent, convenient, and ornamental receptacles for the needles which they contain, and that they are, with their contents, invoiced and imported as an entirety, and designed to be sold as 'furnished needle cases.'" In the present case the books were not invoiced as entireties. The circuit court reversed the decision of the board of general appraisers, upon the ground that the cases were usual and ordinary coverings.

We concur in the finding of facts of the board, and think that while the cases cover needles, and while the articles are extensively imported, the books are more than coverings, and are not designed to be used in the ordinary transportation of needles. They are orna-

Digitized by Google

mental articles, designed to be sold and used as such, and are properly described as furnished needle cases. A description of them as coverings for needles conveys an inadequate idea of the merchandise. The facts in the case are substantially different from those in Magone v. Rosenstein, 142 U. S. 604, 12 Sup. Ct. 391, or in U. S. v. Leggett, 26 U. S. App. 531, 13 C. C. A. 448, and 66 Fed. 300. The decision of the circuit court is reversed.

(78 Fed. 346.)

CARTER MACH. CO. v. HANES et al.

(Circuit Court of Appeals, Fourth Circuit. February 2, 1897.)

No. 175.

1. PATENTS—COMBINATION CLAIMS—SEPARATE ELEMENTS.
   When a patent is for a combination only, none of the separate elements of which it is composed are included within the monopoly.
2. SAME—INFRINGEMENT.
   There is no infringement of a patent which claims mechanical powers in combination, unless all the parts have been substantially used.
3. SAME—TOBACCO FLAVORING MACHINE.
   The King patent, No. 494,960, for a tobacco flavoring machine, consisting of the combination of a rotary flaring drum, a feed hopper emptying into the smaller end of the drum, and a spraying device located within the drum, construed, and *held* not infringed.

Appeal from the Circuit Court of the United States for the Western District of North Carolina.

This was a suit in equity by the Carter Machine Company against Pleasant H. Hanes and John W. Hanes, trading under the firm name and style of P. H. Hanes & Co., for alleged infringement of a patent for a tobacco flavoring machine. The circuit court dismissed the bill, and the complainant has appealed.

W. D. Baldwin, for appellant.

W. W. Fuller and Clement Manly (Watson & Burton, on the brief), for appellees.

Before GOFF and SIMONTON, Circuit Judges, and MORRIS, District Judge.

SIMONTON, Circuit Judge. This case comes up by appeal from a decree of the circuit court of the United States for the Western district of North Carolina. The complainant below filed a bill in equity against the defendant, alleging an infringement of its patent. The circuit court dismissed the bill, and the complainant appealed to this court.

The appellant holds, by assignment, patent No. 494,960, granted to James M. King, April 4, 1893, and assigned to the appellant April 10, 1893. The patent is for a tobacco flavoring machine. The first claim, and the only one in suit, is "the combination, in a tobacco flavoring machine, of a rotary flaring drum, provided with driving mechanism, a feed hopper emptying into the smaller end of the

Digitized by Google

drum, and a spraying device located within the drum, whereby the tobacco is sprayed and leaves separated as they pass through the drum, substantially as described." Mechanical devices for applying a flavoring liquid to tobacco were well known before the date of this patent. The patent of Smith & Messenger (No. 172,666, January 25, 1876) shows a flavoring machine, consisting of an inclined cylindrical rotating drum, through which tobacco passes, and in its passage is sprayed by a spraying device located outside of the drum at its lower end. Smith & Messenger improved on this by patent No. 187,187. These have expired. C. F. Bjick also had a patent (No. 195,578, October 9, 1877) for spraying tobacco leaves. His device has an inclined cylindrical drum, through which the leaves of tobacco pass, and in their passage are sprayed from a spraying nozzle at the upper end of the drum. So King was not a pioneer in seeking and obtaining this result by means of a revolving cylinder and a spraying device.

His claim is for the combination in a tobacco flavoring machine of three parts,—a hopper, a flaring drum, and a spraying device within the drum. His claim, then, is for an entirety. He cannot abandon a part, and claim the rest. He must stand by his claim as he has made it. If more or less than the whole of his ingredients are used by another, such party is not an infringer, because he has not used the invention or discovery patented. Shumacher v. Cornell, 96 U. S. 549. When a patent is for a combination only, none of the separate elements of which the combination is composed are included in the monopoly. Rowell v. Lindsay, 113 U. S. 101, 5 Sup. Ct. 507. Or, as expressed by Mr. Justice Bradley in The Corn-Planter Patent (Brown v. Guild), 23 Wall. 181:

"When a patentee, after describing a machine, claims as his invention a certain combination of elements, or a certain device or part of the machine, this is an implied declaration, as conclusive, so far as that patent is concerned, as if it were expressed, that the specific combination or thing claimed is the only part which the patentee regards as new."

See, also, Voss v. Fisher, 113 U. S. 213, 5 Sup. Ct. 511.

The parts of the combination claimed by the patentee are not new. The hopper has long been well known, and numerous patents are cited in the answer, showing its frequent use before the date of this patent. Indeed, the concise and clear definition given of this term by the expert of the appellant to the court below establishes this. "A hopper is a mechanical device which, in the progress of the arts, was resorted to to take the place of the hands for the purpose of feeding or conducting a substance from one position to another." So, also, the flaring drum was not unknown to the art before the date of this patent, and it is frequently spoken of as the equivalent of an inclined cylinder. In the patent of Justus (No. 317,461, May 5, 1885) is shown a conical drum, and in his specification he says: "The conduit, B, instead of being made flaring or conical, may be in the form of a true cylinder." So Coker's patent (No. 249,009, November 1, 1881) shows a conical drum, and the patentee says, in his application: "The drying cylinders are arranged in an inclined position, so that the grain will gradually work its way from the upper to the

Digitized by Google

lower ends of said cylinders, or the same thing can be accomplished by making the cylinders conical." So in Coleman's patent (No. 111,-612, February 7, 1871) a conical drum is used. "It consists," says the patentee, "of a large, hollow, revolving vessel, which may be cylindrical in shape, or it may be slightly tapered, so as to be somewhat smaller at one end than the other." He goes on: "The vessel, C, is either cylindrical, or it may form a hollow frustrum of a cone, in which case the necessary inclination will be given to the bottom without inclining the axis on which it revolves." Also, as has been seen, a spraying device, for spraying leaf tobacco within a revolving cylinder, was used both in the Smith & Messenger patents and in that of Bjick. So the spraying of leaf tobacco, being well known, the use of the hopper being general, the utilization of the inclined cylinder or its equivalent, the conical or flaring tube, having been discovered, and a mode of spraying from a tube being also known, the appellant can rely only on the combination of the patent, and it must stand by the claim of the patentee as he made it.

The machine of the defendant, which is charged with the infringement of this patent, was originally constructed under the direction of John C. Frost. It has the flaring tube, and a spraying device at the lower end of the tube, outside of it. It differs with the machine of appellant in the hopper. The hopper, in the patent, is attached to the rear or smaller end of the drum. The hopper is supported between uprights, on bars, and at its inner lower end is a spout. In the lower end of the hopper is a feed roller, mounted on a shaft, which is moved by a belt passing over belt pulleys. In operation, the feed roller (which begins to rotate as soon as the machine is put in action) carries the supply of tobacco in the hopper out through the spout at the lower end of the hopper into the rotary flaring drum. The machine used by the defendant has no hopper like this, and no device by which the leaves of tobacco are put into any receptacle, and are fed into the drum by the action of the machinery. It has an opening at the back of the drum, with a sort of shute, and through this hole the tobacco is fed by hand into the drum. This, clearly, is not a mechanical device, resorted to to take the place of the hands, for the purpose of feeding or conducting a substance from one position to another. So, in this important feature of the combination, the machine of the defendant is lacking. "There is no infringement of a patent which claims mechanical powers in combination, unless all the parts have been substantially used." Eames v. Godfrey, 1 Wall. 78. A combination of the mechanical parts of an entire machine is not infringement, except by the use of the entire combination. Brown v. Guild (quoted as "The Corn-Planter Patent") 23 Wall. 181.

Again, the claim of the patentee places his spraying machine within the drum. That of the defendant is without the drum. Is this an essential part of the machine of the appellant? The application of the patentee for his patent met with frequent disallowance and rejection by the commissioner, and in every instance of rejection the location of the spraying device was not fixed. The claim which finally passed was that which located the spraying device within

Digitized by Google

the drum. Indeed, the patents of Smith & Messenger and of Bjick all had spraying devices for the same purpose, but outside of the drum. The expert for the defendant thus clearly contrasts these spraying devices of appellant and of the defendant:

"In the King patent the spraying device is due to the presence of the valve, Q, which acts as a dash plate or spray disc, against which the streams of liquid issuing from the nozzle impinge. If this construction is properly proportioned, the liquid will issue from the spraying device as a sheet of spray, of approximately fan shape, in a substantially downward and nearly vertical direction. The effect will be to form a sheet of spray, extending in a substantially vertical direction, in very much the same manner, as every one has noticed to result from placing his finger immediately contiguous to the mouth of an ordinary water-supply faucet or spicket. Every one who has used a garden hose knows how to send the water out in the form of a spray by placing his finger properly over the nozzle. And in King's construction the flap valve, Q, fulfills the same purpose as a person's finger in using a garden hose. Since the construction of King's spraying device results in a downwardly flowing sheet of spray, it follows that his spraying device must be located inside of the drum, in order that the spray may come in contact with the tobacco passing through the drum. If we regard the interior of the drum as being divided by a vertical plane, cutting the drum longitudinally through its axis of rotation, and then view the drum while in operation, it will be seen that substantially all of the tobacco leaves are located in the right-hand half or section of the drum, and that the left-hand section is empty of leaves, with an occasional exception. This location of the leaves, during the practical operation of the machine, at the right-hand side of the drum, has been taken advantage of in locating and constructing defendant's spraying device. The spraying device is located at the left-hand side of the drum, about half way between its extreme top and bottom, so that it is adjacent to the descending wall of the drum and its side which contains no tobacco leaves. The spraying nozzle is so constructed that the liquid emerges from it in a substantially horizontal direction, in a fan-shaped sheet of spray. The direction of this sheet of spray is such that, if the drum should be empty, the spray would fall upon the lower portion of the rising side of the drum, in a belt extending all the way from the junction of the perforated and imperforated sections of the drum to the discharge mouth of the drum. Consequently, when the drum is in operation, a sheet of spray shoots across the empty side of the drum, and comes in contact with the tobacco leaves as they fall downwardly through the drum, during the entire travel of the leaves through the imperforated section of the drum. The consequence is that each leaf, since it rises and falls a number of times during passage through the drum, frequently falls through the spray, so that every exposed portion of the leaf is uniformly and fully sprayed."

Frost, whose invention is used by defendant, after he had made application for a patent, conceded priority of invention to King, under whom appellant claims. Before that time, however, he had made and sold one of his machines to defendant. This was burned in May, 1893. The one now in use by them was built after that date. Be this as it may, defendants were not parties to the concession, the motive and consideration for which are not disclosed, nor are they or the court estopped from considering the two inventions on their merits. The most that can be said of Frost's action is that it must be considered with the other evidence in the cause.

We see no error in the conclusion, reached by the circuit court, that the appellees do not infringe the patent of the appellants. The decree of the circuit court is affirmed.

Digitized by Google

(78 Fed. 350.)

BIRMINGHAM CEMENT MANUFACTURING CO. et al. v. GATES IRON WORKS.

(Circuit Court of Appeals, Fifth Circuit. April 28, 1896.)

No. 407.

1. PATENTS—INVENTION—STONE BREAKERS.
The following patents for improvement in stone-breaking machines are void, for want of invention, as to the claims specified, namely, the Rusk patent, No. 110,397, claim 1; the Raymond patent, No. 337,320, claim 1; the Gates patent, No. 272,233, claims 1, 2, and 3. Iron Works v. Fraser, 14 Sup. Ct. 883, 153 U. S. 332, followed and applied.

2. SAME—INFRINGEMENT.
The Brown patent, No. 201,646, *held* not infringed as to claims 1, 2, and 3.

3. SAME—COMBINATION OF OLD PARTS.
The Gates patent, No. 243,545, is void, because of anticipation and prior use, as to claims 3 and 4, which are for combinations of various well-known parts of a stonebreaker, with a loose collar around the shaft and below the diaphragm, to protect the machine from dust and small particles. Iron Works v. Fraser, 14 Sup. Ct. 883, 153 U. S. 332, followed.

4. SAME—ANTICIPATION—PRIOR USE.
The Gates patent, No. 250,656, for improvement in stone-breaking machines, consisting in combinations of a shaft, a bearing for the shaft, a hard-metal plate in the lower end of the shaft, an adjustable sliding step block, and an oil step box, is void, especially as to claims 2, 3, and 4, because of anticipation and prior use. Iron Works v. Fraser, 14 Sup. Ct. 883, 153 U. S. 332, followed.

5. SAME—COMBINATIONS.
The Gates patent, No. 259,681, for a "journal bearing for stone and ore-crushers," is void, as to claim 1, as being for a combination of old parts without attaining any decidedly new and useful results.

6. SAME—NOVELTY.
The Gates patent, No. 265,957, for an improvement in stone breakers, consisting in an inclined diaphragm chute, separate from the case of the machine, and having a removable lining to secure durability, is void for want of patentable novelty.

7. SAME—PATENTABLE IMPROVEMENTS—MECHANICAL SKILL.
One who employs mere mechanical skill in the improvement of details is not entitled to patents therefor, although, by the application of such skill, together with diligence, pertinacity, and money, he makes a success of a machine which before was a failure.

Appeal from the Circuit Court of the United States for the Northern District of Alabama.

This was a suit in equity by the Gates Iron Works against the Birmingham Cement Manufacturing Company and others for alleged infringement of 10 patents relating to improvements in stone-breakers. There was a decree in the circuit court for complainant upon 8 of these patents, and defendants appeal.

L. L. Bond, for appellants.
Louis L. Coburn, for appellee.

Before PARDEE and McCORMICK, Circuit Judges, and BOARMAN, District Judge.

Digitized by Google

PARDEE, Circuit Judge. This is a suit commenced in the circuit court August 11, 1887, for the infringement of several letters patent of the United States on certain improvements in stone-breaking machines, and is brought by the Gates Iron Works to recover the gains and profits realized by using the alleged infringing machine, as well as damages sustained by the complainant. The bill declared on 10 several patents, to wit: No. 110,397, December 20, 1870, to J. H. Rusk; No. 201,646, March 26, 1878, to C. M. Brown; No. 237,320, February 1, 1881, to G. & A. Raymond; No. 243,545, June 28, 1881, to P. W. Gates; No. 250,646, December 13, 1881, to P. W. Gates; No. 259,681, June 20, 1882, to P. W. Gates; No. 265,957, October 17, 1882, to P. W. Gates; No. 272,233, February 13, 1883, to P. W. Gates; No. 246,608, September 6, 1881, to P. W. Gates; No. 305,172, September 6, 1881, to P. W. Gates. The title of the Gates Iron Works to the above-mentioned patents is not disputed, nor is it disputed in this court that, if the said patents are valid, the appellants' machine substantially infringes some, if not all, of the above-mentioned patents. The cause was heard in the circuit court, and a decree was rendered October 4, 1889, sustaining the first eight above-mentioned patents, as valid, and holding that the appellants infringed some one or all of the several claims contained in each patent. No reasons were given by the trial judge for his several findings in the case, and we are therefore compelled to examine the record without any assistance from the trial judge, save what is to be found in his ultimate findings of law and fact, the correctness of which is the matter in dispute. By appropriate assignments of error, the appellants question each finding as to each patent, and the claim thereunder, and also the general finding in the whole case.

When the suit was decided by the circuit court a suit was pending in the Seventh circuit against the makers of appellants' machine, in which suit was involved five of the patents included in the present controversy, with others not herein involved. In that suit the bill was dismissed in the circuit court for want of equity. See 42 Fed. 49. An appeal was taken to the United States supreme court, which court affirmed the decision of the circuit court. Iron Works v. Fraser, 153 U. S. 332, 14 Sup. Ct. 883. The opinion in the case deals with five of the patents involved herein, and, so far as it is applicable to the present controversy, is controlling.

In the case at bar the first and second of the errors assigned relate to the Rusk patent, No. 110,397, which was for an improvement in grinding mills, in regard to which the court below found that the appellants infringed the first claim, which is as follows:

"The combination, substantially as described, of soft-metal pins or plugs, c, with a driving gear of a grinding mill."

The third and fourth assignments of error question the court's finding in regard to the Raymond patent, No. 237,320, for grinding wheels, holding the said patent valid, and that the appellants infringed the first claim of said patent, to wit:

"The combination of the shafts, the safety pin, and the reducing devices provided with the exposed hub to co-operate with the pin, such parts being con-

Digitized by Google

structed substantially as described, to permit the instantaneous removal and replacement of the pin."

The fifth and sixth assignments of error are that the court erred in holding the third claim of the patent No. 272,233, to P. W. Gates, to be, in its relation to the prior art, a valid claim, and that the court erred in finding that the devices of the defendants' machine infringed the third claim of said patent.

The third claim of said patent is as follows:

"The combination of the leverage break pin, G, hub, E, hub, F, fastening screw, g, main shaft, B, driving pulley, C, bevel gear wheel, H, I, and crusher shaft, K, substantially as and for the purposes described."

It is to be noticed that these claims are for combinations wherein a safety pin cuts the important figure, and that the safety pins mentioned in the Rusk patent are made of soft metal, in the Raymond patent of wood, and in the Gates patent is a so-called "long-leverage break pin of any suitable material." In regard to this last, the patentee says:

"I do not claim a safety break pin applied to the fly wheel of machinery, as this would not instantly stop the machine, neither do I claim a short break pin applied to the driving pulley of grinding and other machines; that is, a break pin with its entire body or length supported and requiring a sheering action to cut it in two. Neither do I claim, broadly, a break pin which is accessible without moving the wheels. Neither do I claim the loose collar specifically as my invention, but what I claim as my invention is * * * the combination of the leverage break pin, G," etc.

In Iron Works v. Fraser, supra, the court discusses the question of the application of safety pins to prevent the breaking or overstraining of machinery, and holds in regard thereto that "the use of safety pins for saving machinery from the strain of a sudden jar does not involve patentable invention." If this be the case, it is difficult to see how any one of the combinations in the three patents above referred to, in each of which the safety pin is the main figure, and is combined with old devices, can be valid, even if it be conceded that the appellants' machine contains the features of all. In this view of the case, it is not necessary to consider the seventh assignment of error, which is that the court erred in finding or holding that the single break pin device of the defendant's machine infringed three separate patents, to wit, Nos. 110,397, 237,320, and 272,233.

The eighth, ninth, and tenth assignments of error complain of the court's finding as to the first, third, and fourth claims under the Brown patent, No. 201,646. With regard to these assignments, it is substantially admitted that the decision of the supreme court in the case of Iron Works v. Fraser, supra, disposes of claims 3 and 4 under said patent adversely to the appellee's claims as to infringement in this case, and the only contention made in regard to this patent at this time is that the first claim of said patent is valid, and that the appellants infringe in respect thereof. The appellants contend that the first claim of said patent, which is for "the combination of the gyrating spindle, B, B, and conical breaking head, C, C, with the exterior breaking surface, L, L, the sliding socket bearing, e, e,

Digitized by Google

the eccentric bearing at the bottom of the spindle, B, B^1, and the adjusting screws, s, as substantially described," is not in the case, because there is no evidence with regard to the same in the appellee's main case, and none at all in the record, except the evidence of Melville E. Dayton, called in rebuttal; and, besides, that the appellants' machine, as shown by themselves and also by the appellee, does not have in it the spindle, B, B^1, unless the taper spindle is the full equivalent of the Brown spindle, which is of the ball and socket form, nor does it have a sliding bearing at the bottom end of the spindle or the adjusting screw. We agree with the appellants in both contentions.

The eleventh and twelfth assignments of error are to the effect that the court erred in sustaining the validity of the Gates patent, No. 243,545, and in holding that the appellants' machine infringed the third and fourth claims of said patent. The third and fourth claims are for combinations of various well-known parts of a stone or rock breaker, with a loose collar around the shaft and below the diaphragm, so as to protect the operating machinery from dust and small particles. In regard to this patent, which was involved in the case of Iron Works v. Fraser, supra, the supreme court held that the machine, as a whole, is a reproduction of the main features contained in the Brown and Rutter machines, although exhibiting some changes and improvements in details; and, further, that the claim in this patent of a novel application of a loose collar around the eccentrically gyrating shaft to prevent dirt getting into the bearing was anticipated in the Brown machine, as changed in 1878, by a circular washer or collar upon the top of the sleeve that surrounded the breaking head, which fitted around the shaft, the object being to keep the dust from the machinery below; and, further, that several of the features claimed in Gates' patent, including the loose, adjustable collar, were illustrated in the reformed Brown machines actually in public use more than two years before Gates applied for his patents. With regard to this two-years prior use of the important features contained in the third and fourth claims of the patent under consideration, it is admitted that the same proofs are before this court that were before the supreme court, and the main contention is that in regard to the matter the supreme court came to an incorrect conclusion as to the fact of full two years' prior use. An examination of the opinion of Iron Works v. Fraser, supra, shows that the conflicting evidence was fully considered by the supreme court, and we do not deem it necessary or profitable to re-examine the matter.

The thirteenth, fourteenth, and fifteenth assignments of error attack the finding of the court below in sustaining the validity of Gates' patent No. 250,656, and in holding the second, third, and fourth claims of said patent were not anticipated by the prior art, and in holding that the defendants' machine infringed the second, third, and fourth claims of said patent. In Iron Works v. Fraser, supra, the supreme court, in considering this same patent, held as follows:

Digitized by Google

"The alleged invention in Gates' patent, No. 4, is for a combination of old features, to wit, a shaft, a bearing for the shaft, a hard-metal plate in the lower end of the shaft, an adjustable, sliding step block, and an oil step box. All the elements of this combination were shown to be present in the Brown machine, as made and sold more than two years before Gates applied for this patent, except the hard-metal plate at the end of the shaft. But the use of hard or steel wearing plates was shown to be old, and several letters patent, viz. C. M. Savoye, an English patent, 1831; T. Varney, No. 63,675, issued April 9, 1867; Palen & Avery, No. 111,239, issued January 24, 1871,—and several others, were put in evidence by the defendants, and exhibited the feature of a hard-metal wearing plate at the end of the working shaft."

Counsel for the appellee concedes that this language of the supreme court is sufficiently comprehensive to cover the points at issue, so far as this Gates patent is concerned; contending, however, that the supreme court overlooked the main features of this patent.

The sixteenth and seventeenth assignments of error relate to the finding of the court as to the validity of the Gates patent, No. 259,-681, entitled, "Journal bearing for stone and ore crushers," and are to the effect that the court erred in finding that the patent disclosed a patentable subject-matter in respect to the first claim thereof, and in holding that the said first claim was not anticipated in and by the prior art. The record shows that the first claim of the patent, and the only one in controversy, is "for a gyrating crusher shaft, having the tapering journal, C, in combination with a journal bearing, whereby only a portion of said tapering journal stands parallel and in contact with the vertical surface of said bearing during the gyration of the shaft, substantially as described." The "whereby" part of the said claim, added for the purpose of specifically defining the claim and showing the operation of the journal in connection with the bearing, does not add anything to the claim, which must be taken and considered as for "a gyrating crusher shaft, having the tapering journal, C, in combination with a journal bearing." The file record of this patent shows that Gates, the patentee, originally made a claim "for a gyrating shaft with a tapering journal, C, substantially as and for the purpose described," and that this was rejected on an old patent to Walters, No. 24,268, May 31, 1859. After this rejection the application was amended several times, and resulted in erasure of all the original claims, and the insertion of a claim as above recited. In his original specification, Gates says: "The invention which I have made is a revolving, gyrating crusher shaft, C, having a journal, c, of taper form at its upper end; that is, shaped from its base, c^1, to its top, c^2, to correspond to a truncated cone, as shown." This claim of invention, which was for a certain shaft, was subsequently amended so as to be for a combination, and to read as follows: "The invention which I have made is the combination with a journal bearing, of suitable form, of a gyrating crusher shaft," etc. From this it appears that not only was the original claim for the shaft itself abandoned, but the description of the invention was changed to that of a combination of a shaft to a suitable bearing box. The specification, as finally perfected, substantially shows that the patentee admits the machine to be an old one, for he says, "In the accompanying drawings, my invention is shown

Digitized by Google

applied to a stone breaker in common use, * * *" and, after describing the several parts, continuing, says that they "are of ordinary construction, and operate in the usual manner, and require no further description. Any other form of combination and arrangement of these well-known parts may be adapted in connection with my invention, so long as the same produce a revolving, gyratory motion of the conical crusher head." In relation to these statements, counsel for the appellants well says:

"From the statements just quoted, it will also be apparent that anything brought from the same or other arts into these old machines is simply a matter of transference from one machine to another, and brings them within the doctrine of analogous use. Every shaft to which movement is to be imparted must necessarily have a bearing box. So that the combination of a shaft with its supporting or holding bearing box is old, and is to be found in every machine ever built which had a shaft in its structure. The combination claimed resolves itself down, therefore, simply to the words 'tapering journal combined with a suitable bearing box.' All bearing boxes are adapted to their shafts, so that, the form of either being given, that of the other necessarily follows: A shaft and its bearing or journal box are always inseparable companions, so that a claim for combining them is absurd on its face."

The claim under consideration being, as finally amended in the patent office, "for a combination," it would seem clear that we may hold that the devices entering into such combination are old, and common property. In The Corn-Planter Patent, 23 Wall. 181, 224, it is said:

"Where a patentee, after describing a machine, claims as his invention a certain combination of elements, or a certain device, or part of the machine, this is an implied declaration—as conclusive, so far as that patent is concerned, as if it were expressed—that the specific combination or thing claimed is the only part which the patentee regards as new. True, he or some other person may have a distinct patent for the portions not covered by this, but that will speak for itself. So far as the patent in question is concerned, the remaining parts are old, or common, and public." See Miller v. Brass Co., 104 U. S. 352.

An examination of the record as to the prior art shows, beyond implied admission, that all of the component parts of the combination claimed in the patent are old, and a reference to the Klinkerman patent of 1864, the Pearce patent of 1866, the Varney patent of 1867, and the Wheeler patent of 1868, all found in the record, is all that is necessary to determine the fact. Our examination of the record in this case does not convince us that by the combination claimed in the patent any decidedly new and useful results are attained. It is probable, however, that a gyrating crusher shaft, having a tapering journal in combination with a suitable journal bearing, as compared with a gyrating crusher shaft having a ball and socket bearing, will save expense, and, to some extent, give better results; but it still appears to be a change only in form, the substitution of equivalents doing the same thing in the same way by substantially the same means. According to Smith v. Nichols, 21 Wall. 119, such improvement is not such invention as will sustain a patent.

The eighteenth, nineteenth, and twentieth assignments of error complain that the court below found that the Gates patent, No.

Digitized by Google

265,957, was not void upon its face, that it disclosed a patentable subject-matter, that the second claim of said patent was not anticipated in and by the prior art, and that the defendants' machine infringed the second claim of said patent. In his application, which is for a patent on a new and useful improvement on stone breakers and crushers, Mr. Gates says:

"My invention relates—First, to an improved, removable, inclined diaphragm chute, applied transversely in the outer framing or case of the crusher at a point between the crusher head and its concave, and the gearing and step box of the gyrating shaft carrying the crusher head; second, to a means whereby the diaphragm chute may be constructed partly of common cast iron, and partly of hard, white or chilled iron, or steel, and thus a durable wearing surface be secured at moderate cost; this part of my improvement being applicable to the diaphragm chute, whether it is made separate from the outer framing or case, or is cast integral with said framing or case of the machine. In the P. W. Gates patented stone breakers or crushers, as heretofore constructed, it has been found inconvenient, in some instances, to grind off the bearing upon which the loose dust-excluding collar rests, on account of the inclined diaphragm chute being formed by casting it integral with the cylindrical case or framing of the machine; and it has also been found that the diaphragm chute wears away on its upper side to such an extent as to render renewal thereof necessary, or, what is more expensive, to substitute a new casting, with chute in it, for the one with wornout diaphragm. To overcome these difficulties is the object of my invention, and I effect the same by the means shown in the accompanying drawings."

Further on in the specifications we find this statement:

"To render the diaphragm chute durable, and its entire removal unnecessary, except when breakage occurs, I, in some cases, construct the diaphragm proper, F, with a removable hard or chilled metal or steel upper surface portion, m, which corresponds in form with the diaphragm chute proper, except that a flange, g, on this portion, m, may be omitted around the passage through which the shaft, B, passes."

To explain these quotations, Fig. 1 accompanying the application is here given:

Fig. 1.

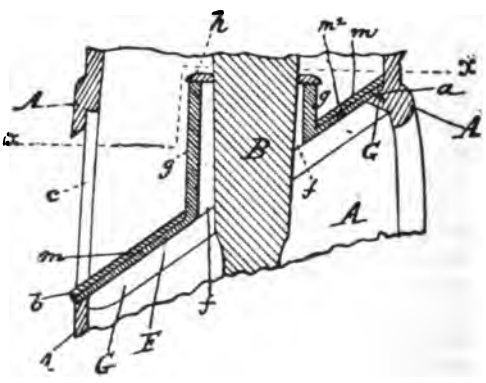

Digitized by Google

The second claim of the patent is as follows:

"The inclined diaphragm chute, formed of a base portion, F, and a removable wearing portion, m, substantially as and for the purpose described."

Counsel for the appellants contends with great force that the patent is not only void for uncertainty, but also because, according to the specifications, the claimed invention of a removable wearing portion or lining, which gives what life the patent may have, may or may not be applied, according to the judgment of either maker or user. We do not find it necessary to consider these phases of the case, because we find the patent void for want of novelty. As we understand the specifications and claims, the patent is intended to cover the casting of the inclined diaphragm chute separate from the case of the machine, and to give the inclined diaphragm chute a removable covering or lining to secure durability in that part of the machine. It certainly cannot be novel, so far as a machine made of iron is concerned, to cast it in two parts, and coverings or linings to preserve the wearing of machines are as old as any application of skill for the protection of machinery; and certainly the alleged inventor cannot take anything for a supposed discovery for casting the wearing portion of a machine out of hard or chilled iron, as against a previous composition for the same parts of soft iron.

In dealing with the fifth and sixth assignments of error, we considered the Gates patent, No. 272,233, in relation to the third claim thereof, for a combination of a leverage break pin with other parts of a stone-breaking machine; and we now have to consider the twenty-first and twenty-second assignments of error, which complain of the finding of the circuit court in respect to the validity and infringement of the first and second claims of said patent No. 272,233. An inspection of the file wrapper and contents of this patent will be instructive to the amateur inventor, for it will show that the applicant for this patent started in the patent office with a description of a coupling pin in connection with a shaft and driving wheel of a stone crusher, and a short description of a dust collar,—the invention of which he disclaimed,—and claiming only the combination of a coupling pin with the shaft and a wheel loose upon said shaft. He eventually obtained, after many amendments and references,—several at the suggestion of the patent officials,—a full-fledged patent for combinations, in various ways, of nearly all the well-known parts of a stone-crushing machine. The first and second claims of this patent, as perfected, are:

"(1) The combination with the concave, M, the crusher head, k^2, the crusher shaft, K, and suitable mechanism for operating the crusher shaft, of the outer frame or shell, A, having an inclined discharging and shielding chute, a, forming a bearing below the crusher head, and the loose, dust-excluding collar, k^3, substantially as described.

"(2) The combination of the outer frame, provided with a base plate having an oil step box, with the bevel wheel, I, having an eccentric bearing suspended within the step box, said bevel wheel being on top of the step box, the step block, adjusting screw, the gyrating shaft passed through the eccentric bearing and resting on the step block, the crusher head, concave, and inclined diaphragm and shielding chute, substantially as and for the purpose described."

Digitized by Google

The following is the diagram accompanying the patent:

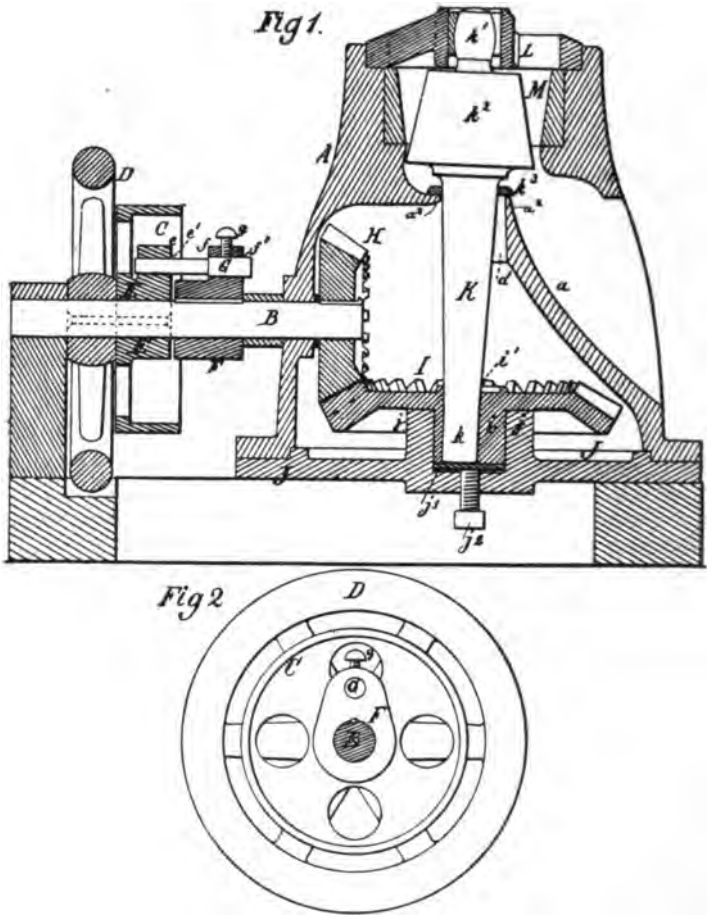

In Iron Works v. Fraser, supra, the supreme court considers the integrity of the Brown and Scoville unpatented machines, hereinbefore referred to, and finds them to be older than the inventions set forth in any of the Gates patents. The testimony concerning these machines is the same here as it was before the supreme court. The claims above quoted, under the present patent, appear to be substantially shown and described in the earlier Gates patent, No. 243,545. We are of opinion that everything valuable found in the two above-quoted claims under patent 272,233 are found either in the Brown and Scoville machines, or in the specifications of Gates' patent, No. 243,545.

Digitized by Google

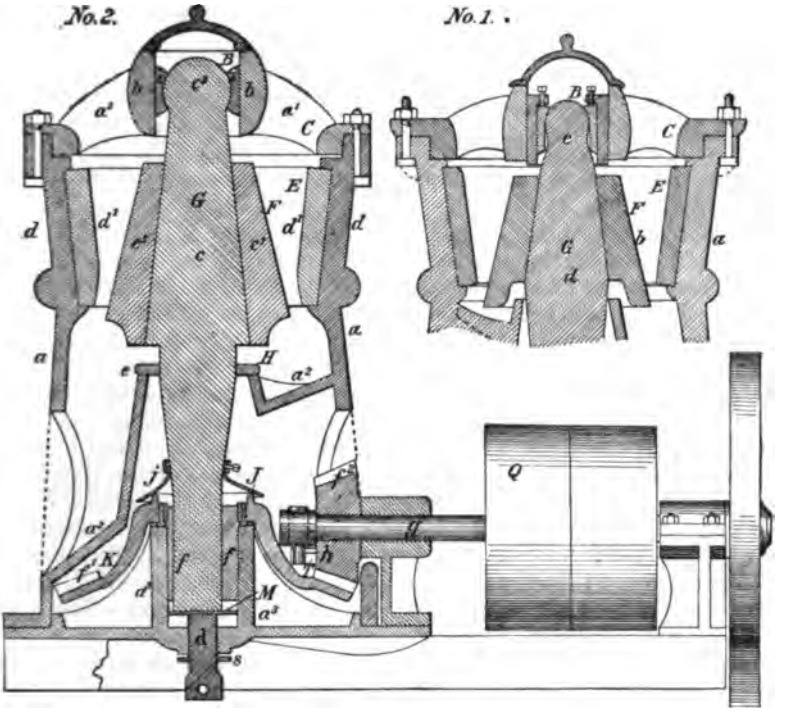

The foregoing attached cut is a reproduction of the machine shown in the Brown drawing No. 2, and of the upper end of the machine shown in the Brown drawing No. 1. The black letters [capitals in the above cut] are mainly from the Gates patent, No. 243,545; the red letters [small letters in above cut] on No. 2 are copied from the Gates patent, No. 272,233, and on No. 1 they are copied from the Gates patent, No. 259,681. All the parts and construction in these drawings unquestionably relate to the prior art.

In Miller v. Manufacturing Co., 151 U. S. 186, 14 Sup. Ct. 310, where it is held that no patent can issue for an invention actually covered by a former patent, especially to the same patentee, although the terms of the claims may differ, Mr. Justice Jackson, after reviewing the authorities, says:

"The result of the foregoing and other authorities is that no patent can issue for an invention actually covered by a former patent, especially to the same patentee, although the terms of the claims may differ; that the second patent, although containing a broader claim, more generical in its character than the specific claims contained in the prior patent, is also void; but that where the second patent covers matter described in the prior patent, essentially distinct and separate from the invention covered thereby and claims made thereunder, its validity may be sustained. In the last class of cases it must distinctly appear that the invention covered by the later patent was a separate invention, distinctly different and independent from that covered by the first patent; in other words, it must be something substantially different from that comprehended

Digitized by Google

in the first patent. It must consist in something more than a mere distinction of the breadth or scope of the claims of each patent. If the case comes within the first or second of the above classes, the second patent is absolutely void."

Under this decision the contention of the appellee that the patent No. 272,233 is an older patent than No. 243,545, because it has a prior file date, is untenable; but, even if this was not ordinarily the case, an examination of the file wrapper and contents shows that although the original application for the patent was filed on February 17, 1879, it was not until October, 1882, that the applicant attempted to make claims and specifications covering the parts now covered by the first and second claims of the patent, and it was only then that the applicant gave specifications describing a base plate and step box which are the particular parts in regard to which appellee's counsel undertakes to differentiate the first claim of the patent from the Brown machine. Counsel for appellee contends that claim 1 of the patent under consideration is virtually for the loose, dust-excluding collar. He says "that the Brown patent, No. 201,646, has no cap or loose collar around the crushing cone on the uprising tube of the diaphragm which surrounds the gyrating shaft." In view of the fact that in the first application for the patent under consideration the applicant disclaimed the invention of this loose, dust-excluding collar, the contention of counsel does not appear to merit serious consideration.

This disposes of all the specific assignments of error. The others need not be considered.

Counsel for appellee concludes his very ingenious and elaborate brief as follows:

"The stone-breaking machine known as the 'Gates Stone Breaker' was the first stone breaker of this gyratory type that was ever made, and worked as a successful, valuable machine. The first patent showing a machine of this type was the Pearce patent, a copy of which is on page 238, vol. 2, printed record. This patent the Gates Iron Works purchased, and still owns: In this machine the crushing arbor or shaft gyrated at the top, instead of at the bottom; the driving wheel that drove it was located at the top; the lower end of the shaft was supported in a step in a crossbar held up by rods. The next patent in the art showing a machine of this character of construction was the Rutter patent, shown on page 266, vol. 2, printed record. The crushing shaft in that patent was suspended from the top by a ball, E, while the lower end of the shaft passed into an eccentric box in the gear wheel, the gear wheel being below the bottom plate of the machine. The crusher shaft was rigidly fixed in the gear wheel, and the machine simply ground and rubbed the stone, instead of crushing it. * * * The next patent in the order of the development was the Brown patent involved in this suit. That was really the first stone-breaker machine of this type in which the arbor of the crushing cone was gyrated at its lower end, and would break the stone by impingement, without rubbing or grinding the stone. The machine was in the shape of the Brown patent when Mr. P. W. Gates, who had had a lifelong experience in the manufacture of other kinds of stone crushers, as well as general machinery, took hold of this machine. It was not in practical shape at that time. Brown had put into the machine the important feature of a diaphragm, and certain bearing boxes and adjusting screws. All the witnesses agree that these machines were not a success. Gates improved this machine, overcoming one objection after another, investing upwards of $40,000 in making his improvements before he succeeded in getting a thoroughly practical machine. His various improvements resulted in making this machine one of the most valuable machines made in the country. They have gone into use throughout the world, wherever there is stone to be broken or quartz to be crushed. It is certain that, had it not

Digitized by Google

been for Mr. Gates' persistency, this machine would never have become a success. What he did to the machine in making the improvements is delineated in his patents above discussed. Whatever merit the machine possesses as a practical operating machine was added to it by Gates, excepting the diaphragm feature in the Brown patent. Some of the Gates improvements may be on the border line between the skill of a mechanic and the ingenuity of an inventor; but, when considered in connection with his complete line of improvements, from the time that he took hold of the machine until it was a great success, there are certainly displayed marked and important changes in the machine, which could have been produced only by a superior quality of inventive ingenuity."

Our examination of the record leads us to substantially agree with all of this, except the last sentence, in its entirety. The gyrating crushing shaft and the inclined diaphragm chute were inventions in the construction of a successful stone-crushing machine. All the other improvements, in our judgment, were within the domain of skill. As Gates was not the pioneer inventor of either the gyrating crusher shaft or the inclined diaphragm chute, he can take nothing by his claimed invention of details, although, through his pertinacity, diligence, money, and skill, the stone-breaking machine has been made a success. In Atlantic Works v. Brady, 107 U. S. 199, 2 Sup. Ct. 231, it is said:

"The process of development in manufactures creates a constant demand for new appliances, which the skill of ordinary head workmen and engineers is generally adequate to devise, and which, indeed, are the natural and proper outgrowth of such development. Each step forward prepares the way for the next, and each is usually taken by spontaneous trials and attempts in a hundred different places. To grant to a single party a monopoly of every slight advance made, except where the exercise of invention somewhat above ordinary mechanical or engineering skill is distinctly shown, is unjust in principle, and injurious in its consequences. The design of the patent laws is to reward those who make some such substantial discovery or invention which adds to our knowledge, and makes a step in advance in the useful arts. Such inventors are worthy of all favor. It was never the object of those laws to grant a monopoly of every trifling device, every shadow of a shade of an idea, which would naturally and spontaneously occur to any skilled mechanic or operator in the ordinary progress of manufactures. Such an indiscriminate creation of exclusive privilege tends rather to obstruct than to stimulate invention. It creates a class of speculative schemers, who make it their business to watch the advancing wave of improvement, and gather its foam, in the form of patented monopolies, which enable them to lay a heavy tax upon the industry of the country, without contributing anything to the real advancement of the arts. It embarrasses the honest pursuit of business with fears and apprehensions of concealed liens, and unknown liabilities to lawsuits, and vexatious accountings for profits made in good faith."

The decree appealed from is reversed, and the cause remanded, with instructions to dismiss the bill.

Digitized by Google

(78 Fed. 395.)

BLANKS et al. v. KLEIN et al.

STARCKE et al. v. KLEIN et al.

(Circuit Court of Appeals, Fifth Circuit. December 1, 1896.)

No. 464.

APPEALABLE DECREES—DECREE FOR COSTS.

An appeal from a mere decree for costs of the court below must be dismissed, as a matter within that court's discretion. But, where one item included in the decree is for clerk's fees in making and certifying the transcript on a former appeal, the appellate court may review the same on the merits.[1]

Appeal from the Circuit Court of the United States for the Western Division of the Southern District of Mississippi.

Wade R. Young, for appellants.
M. Dabney, for appellees.

Before PARDEE and McCORMICK, Circuit Judges, and MAXEY, District Judge.

PARDEE, Circuit Judge. This appeal is from a decree of the circuit court taxing costs in two equity causes which were decided in the circuit court July 16, 1891. Both causes were afterwards appealed to this court, where Blanks v. Klein was affirmed (3 C. C. A. 585, 53 Fed. 436), and Starcke v. Klein was dismissed for failure to file the record within the proper delay (14 C. C. A. 672). The contested items of costs, with one exception, are costs incurred in the circuit court in the trial of the causes, and were approved by the judge who rendered the decrees, apparently in compliance with section 983, Rev. St. U. S. The proceeding in which the decree under consideration was rendered appears to have been provoked by a motion of the appellants to retax costs. Proceeding under this motion, the court, on the application of movers, referred the matter to a special master, with directions to tax the costs of said suits due by movers, and to make report to the judge of the court in vacation. The special master made an investigation, hearing evidence of several parties by way of deposition, and reported that the items complained of were properly and lawfully taxed. Exceptions were filed to this report, complaining of the special master's findings both of fact and of law. The decree of the court overruled the exceptions to the master's report, confirmed the same in all respects, and declared as follows:

"And it is further considered by the court that inasmuch as nothing is involved in said motion and report except costs in said causes, and that both of said causes have heretofore been appealed to the court of appeals, and said appeals finally disposed of in that court, no appeal lies from this decree."

It seems to be settled that no appeal will lie from a mere decree for costs. Clarke v. Warehouse Co., 10 C. C. A. 387, 393, 62 Fed.

[1] As to the allowance of costs in equity both by the court below and upon appeal, see note to Salt Co. v. Brigel, 17 C. C. A. 368.

Digitized by Google

328; Du Bois v. Kirk, 158 U. S. 58, 67, 15 Sup. Ct. 729. If this case covered only the costs incurred in the circuit court in an equity cause, which costs are unquestionably within the sound discretion of the court (Canter v. Insurance Co., 3 Pet. 307; Kittredge v. Race, 92 U. S. 120), we are clear that this appeal should be dismissed. As, however, one item included in the decree is for making and certifying the transcript in the appeal to this court, and incidentally, therefore, an item of costs incurred in this court, we are disposed to consider the merits of the same.

The contention of appellants is that, owing to the circumstances attendant upon making up the transcript, the clerk agreed to accept a less sum than the fee allowed by law for such services. The master finds, in respect to this matter, that the clerk was entitled to his full fee for the preparation of the transcript, unless the agreement claimed by complainants (appellants) to have been made with him for compensation was established by the testimony, and then, upon a review of the evidence, finds that such agreement is not established. It is doubtful, under the system of compensation to clerks of the circuit courts of the United States, whether in any case the clerk may remit fees allowed by law, without making himself liable for the full amount, because the United States are interested in the fees of such clerks, and entitled to the overplus after deducting the compensation fixed by law. However this may be, we have examined the evidence found in the transcript, and we reach the same conclusion as did the master, that the agreement on the part of the clerk to remit any part of the lawful charges for making and certifying the transcript is not established. The decree appealed from is affirmed.

(78 Fed. 399.)

PENNINGTON v. SMITH et al.

(Circuit Court of Appeals, Second Circuit. January 7, 1897.)

1. DECREES OF ORPHANS' COURT—TRUSTEE'S ACCOUNT.

S., as executor of his wife's will, held a considerable amount of personal property and some real estate, one-half of both belonging to him under the will, and one-half going to him as trustee for his children. He filed an account of the personalty, in which he charged himself with $13,800, overpaid beyond the actual amount of property received, as if with an asset of the estate, and credited himself with sundry items, including large disbursements for general expenses of the estate and family, and $88,900, paid to himself as trustee for his children, which would be the correct amount of their interest, if the other items were correct, and the $13,800 overpayment represented an actual receipt of property. The account was approved by the orphans' court as filed. Upon the theory that he was entitled to reimburse himself for this overpayment out of the beneficiaries' share of the real estate, he took and deposited with his own funds, in the hands of his second wife, a part of the proceeds of the sale of the infants' share of the real estate. S. having died, and litigation having arisen in the United States circuit court, between his widow and his successor as trustee, seeking to reclaim from her hands the share of the proceeds of the real estate taken by S., the widow claimed the right to show the overpayment, and charge it against the payment to the infants' estate, which the trustee resisted unless permitted to open the whole account, and show that the overpayment was properly chargeable against other items. *Held*, that the circuit

Digitized by Google

court could not go behind the decree of the orphans' court for one purpose, and not for all, and would apply the rule that the adjudication of a competent court will be accepted as a settlement of the questions before it. 75 Fed. 157, reversed.

2. FEDERAL JURISDICTION—CITIZENSHIP OF TRUSTEE OR SPECIAL GUARDIAN.

A testamentary trustee, or a special guardian appointed under a state statute for the sale of infants' land, suing in either capacity, is not a mere guardian ad litem or next friend; and the federal courts have jurisdiction of a suit brought by him against a citizen of a state other than his own.[1]

3. TRUSTEES—DEALINGS WITH TRUST FUNDS—NOTICE TO THIRD PARTIES.

S., who held a mortgage as special guardian and trustee for his children, received a payment on the mortgage in a check payable to him as guardian, which he turned over to his wife, who deposited it in her bank, and afterwards returned a part of the sum to S., and expended a part under his direction for the maintenance of the children. S. claimed a right to the proceeds of the mortgage as his own, which his wife knew; but, it being afterwards held that he was not so entitled, also *held*, in a suit by the successor of S., appointed after his death, against S.'s widow, that she was chargeable with knowledge that the money was a trust fund, and was accountable for all of it but that returned to S., the principal of the trust fund not being applicable to the maintenance of the beneficiaries, and the widow being chargeable with knowledge of that fact.

Appeal from the Circuit Court of the United States for the Southern District of New York.

John B. Leavitt, for appellant.
Alex. Thain, for appellees.

Before LACOMBE and SHIPMAN, Circuit Judges.

LACOMBE, Circuit Judge. Sallie L. B. Smith, the first wife of George Condit Smith, died in July, 1890, leaving two young daughters. She was a resident of New Jersey, was possessed of real and personal property, and left a will, which was duly admitted to probate in that state. After the bequest of a few specific legacies, the will provides as follows:

"I give, devise, and bequeath the equal undivided half part of all the rest of my property, as aforesaid, to my husband absolutely, and the other equal undivided half part thereof I give and bequeath, absolutely, to such child or children, and, if children, then in equal shares; but I direct that my husband shall hold the same in trust for such child or children during its or their minority, managing and investing the same according to law, and from time to time applying such parts of the income thereof to the support, maintenance, and education of such child or children as he may think advisable. The determination of my husband as to such management, investment, and application of income shall be final, and without appeal or question, as I have full confidence in his good sense and discretion."

Her husband was appointed executor, duly qualified, and proceeded to administer the estate. His account as executor was filed in December, 1891, and on February 23, 1892 the orphans' court audited and allowed said account as filed. It appeared therefrom that the executor had paid to himself, as trustee for each infant, on December 23, 1890, $30,200; and again, on May 25, 1891, $14,250, for each,—the total thus paid being $88,900. These pay-

[1] As to the jurisdiction of the federal courts, in cases dependent on the citizenship of trustees, administrators, guardians, etc., who are parties, see note to Shipp v. Williams, 10 C. C. A. 252, 253.

Digitized by Google

ments were in fact made by depositing 90 railroad bonds, valued at that amount, with the Central Trust Company, under an agreement which need not be recited, but which made the trust company the custodian of the bonds until the children's majority, with proper provisions for the disposition of the bonds and income therefrom. In July, 1892, George Condit Smith married the defendant Emma Condit Smith, having before that date become a resident of this state. He died October 7, 1894, leaving the said two children as his only heirs at law and next of kin, and by his will appointed his second wife, the defendant Emma Condit Smith, guardian of his children, and executrix of his estate. During the progress of this case through the circuit court, she received letters testamentary and of guardianship, in conformity with such appointment.

A portion of the residuary estate of the first Mrs. Smith consisted of a house and land in East Orange, N. J. Having removed from that state, it seemed to Smith desirable to sell this real estate; and in January, 1893, proceedings were begun in the court of chancery for New Jersey, under a statute entitled "An act relative to the sale and disposition of the real estate of infants." Revision, p. 481, approved March 27, 1874. That statute provides for the appointment of a special guardian to sell such lands, when the court may be satisfied that such sale is for the interest of the infants, and further provides as follows:

"Sec. 5. No sale of any real estate made in pursuance of the provisions of this act shall give to any person any other or greater interest in the proceeds of such sale than he or she would have had in the lands, provided the same had not been sold; but the said proceeds shall be considered relative to the statutes of descents and distribution, and for every other purpose as real estate of the same nature as the property sold."

"Sec. 9. When any special guardian appointed under this act shall have sold the lands and real estate of the infant, and his account been presented and approved by the chancellor, it shall be lawful for the chancellor to make an order directing the said guardian to pay the proceeds of such sale, after deducting such commissions and expenses as shall be allowed by the chancellor, to the general guardian of the said infant; and upon the payment to the general guardian of the amount ascertained by the chancellor to be due to the infant in the hands of the special guardian, and the assignment of the securities held by him in case the money has been invested by order of the court, the special guardian may by an order of the chancellor, be discharged from further duties and liabilities in relation to his office; and the receipt of the general guardian for the moneys and securities so ordered to be paid and transferred shall be a sufficient release and discharge of such special guardian from his trust."

Smith's petition for sale of this real estate being presented to the court of chancery, the matter was referred to a special master to investigate and report. The master, after investigation, reported in favor of a sale; also, that:

"George Condit Smith, the father of the infants, is the sole executor of the will of his first wife, under which will the said infants became entitled to their interest in said lands, and that he is by said will appointed trustee to hold the said lands in trust for the said infants during their minority; that he is * * * a suitable * * * person to be appointed special guardian of the said infants to sell the said lands."

Upon this report and a "consent waiver" of Smith annexed thereto, whereby he agreed to release his curtesy in said premises, and

Digitized by Google

to unite in the sale and conveyance of the same individually, and as trustee under the will of his late wife, and also as individual beneficiary of one-half of the property under the will, the court of chancery appointed Smith special guardian, and ordered a sale of the infants' right and title to such real estate for the sum of $13,750. It was further ordered that the net proceeds be put at interest by said guardian under direction of the chancellor, on good security, by bond and mortgage, for the benefit of said infants, and that the guardian make a report. Before this order was made, a conditional agreement of sale had been made with one Crossley, for $5,000 cash, and the rest of the sum of $27,500 to be paid in half-yearly installments of $5,000 each, all unpaid balance to be secured by purchase-money mortgage. This agreement was approved by the court of chancery, and sale ordered in conformity thereto. On April 8, 1893, Smith, as special guardian, reported that he had sold the premises for $27,500, of which one-half ($13,750) belonged to the infants; that the costs and expenses of the proceeding amounted to $393.13, and that he had "invested the balance of said money belonging to the infants in the purchase-money mortgage executed by Rena P. Crossley and husband on the premises sold, giving to myself, as special guardian of the said minors, a prior lien in said mortgage to the extent of the sum of $13,356.87, the balance of the said money due to the said minors. The said mortgage bears 5 per cent. interest, and is payable in two years from the date thereof." What the amount of this mortgage was, the report of the special guardian does not disclose. It appears from the record on this appeal that the Crossleys paid $10,000 in cash, and that the purchase-money mortgage secured a bond to Smith, "personally and as such special guardian," in the sum of $17,500; $5,000 to be paid March 20, 1894, $5,000 on September 20, 1894, and the balance on March 20, 1895. At the time of making his report as special guardian, Smith filed a declaration of trust (duly recorded), by which he declared that, as special guardian in chancery of the said infants, he held the said mortgage as such special guardian to the extent of $13,356.87; and he further covenanted as follows:

"Said sum belongs to me as such guardian as a prior lien on said mortgage, and that my individual right in said mortgage money and interest is subject to said amount due to me as special guardian as aforesaid, with interest, I having individually received all the net proceeds of cash that came from the sale of said lands: my intention being to invest all my children's shares in the proceeds of sale in said mortgage as a prior lien, the balance only belonging to me individually."

Subsequent to the filing of Smith's report as special guardian, no further steps appear to have been taken in the court of chancery touching this proceeding during his lifetime. There is nothing to show that this account was approved by the chancellor; and no order was ever made directing him to pay the net proceeds to the general guardian of the infants. He died still special guardian, under this act, and with the trust such act imposed undischarged. That act undoubtedly required the special guardian to hold the proceeds in trust for the infants until they came of age or

Digitized by Google

died, or until the court of chancery, under the ninth section of the act, might relieve the special guardian from further duty; and none of these contingencies had happened when Smith died.

On October 16, 1894, upon a petition of the infants "by J. Condit Smith, their next friend," the complainant, William Pennington, a resident of New Jersey, was appointed by the court of chancery of that state trustee for the infants severally, "in the room and stead of George Condit Smith, deceased, to execute the trusts mentioned and declared in and by the last will and testament of Sallie L. B. Smith, deceased, * * * with all the rights, powers, duties, and privileges incident to the appointment." Pennington was required to give bonds in the amount of $60,000, as trustee for each child, and has so done. On October 17, 1894, the same court of chancery, on a like petition in the matter of the sale of the infants' lands, appointed complainant "special guardian in the place and stead of George Condit Smith, special guardian, deceased, for [said infants] severally, with all the rights, duties, and privileges incident to the appointment."

On October 18, 1894, this suit was brought. Before going into any statement of the facts constituting the alleged cause of action, it will perhaps be not inappropriate to state that, from an examination of the record, we are satisfied that both parties, the complainant, Pennington, and the defendant Emma Condit Smith, are sincerely solicitous to protect the interests of these little children. Those interests would, we doubt not, be conscientiously looked after whether the legal obligation to do so rested upon the complainant, at one time their father's legal adviser, and apparently for many years their dead mother's friend, or upon the defendant, their stepmother, who, receiving them in their infancy, has tenderly cared for and nurtured them, and been to them the only mother that they have ever known. This circumstance makes it most unfortunate that the parties could not have come together before suit was brought, and, appreciating the situation which had been brought about by George Condit Smith's careless methods of doing business, have reached some agreement, which would have fully protected the interests of the infants, without the harassment and expense of this suit. From letters put in evidence, it appears that defendant declined to meet the plaintiff, and discuss the situation, being led to believe that he had asked for an interview, not as a friend of the children, which she knew him to be, but as the representative of certain of her husband's relations, whom she seems to have had good reason to dislike. In declining to meet him, she states that her family would under no circumstances permit her to confer with him. In this particular they proved to be reckless and incompetent advisers, and it is to be regretted that defendant did not follow her first impulse, and confer with the plaintiff. Such conference could not have proved otherwise than helpful. The facts out of which this cause of action arose will next be set forth.

At the time of Smith's marriage to his second wife, he was practically without means. The money he had received from his first

Digitized by Google

wife had been spent and lost, much of it, no doubt, in improvident investments, into which he appears to have been led by a brother, J. Condit Smith. About a year afterwards, he met with an accident, which injured his hand, so that he could not write; and thereafter he kept no bank account, but, whenever he had occasion to avail of bank facilities for deposit or check, used the bank account which the defendant Mrs. Emma Smith kept, in her own name, with the Fifth Avenue Bank. There remained to him, however, as we have seen, the balance of the Crossley mortgage over and above the $13,356.87 prior lien which he held as special guardian for his children. He seems, moreover, to have believed that he was entitled to appropriate to his own use the $13,356.87, as an offset to a supposed "overpayment" by him, as executor, to the trust funds of the infants, which he had lodged in the Central Trust Company. This question of alleged overpayment will be examined critically hereafter. For the present it is sufficient to say that the accountant who prepared his account for the orphans' court called his attention to the fact that the aggregate of all the schedules of executor's credits exceeded the total amount realized from the estate in the amount of $13,826.89. Thereupon he charged himself with this amount, so as to make his account balance, and said to the accountant that, "as the only piece of property belonging to the trust estate was the house in East Orange, he would apply any overpayment that he had made to the children in the trust, together with any expenditures or payments that he might make for the trust estate, as an offset to their interest in the East Orange property." Inasmuch as he subsequently stated to another witness that his children "practically had no interest in the mortgage, as he had already deposited in the Central Trust Company the equivalents of what their share would be," it is evident that he supposed that this overpayment by him as executor had been made, not only solely on "Schedule F, Payment of Legacies," but also solely on the items of that schedule which represented the payments to his children. Upon what theory he based his supposition the record does not disclose, and we are at a loss to conceive. Of course, it is not material to the issues raised in this case to ascertain what might be George Condit Smith's conception of his rights, but it has seemed proper to state it in order to avoid any inference that in his subsequent transactions he had any intent to despoil his children of anything which might belong to them.

On March 20, 1894, the mortgagor under the Crossley mortgage paid off $5,000 of the principal of the mortgage, by check to the order of George Condit Smith, who gave receipt therefor "personally and as guardian of Louise Condit Smith and Sallie Barnes Smith." No one here disputes the proposition that, out of this $5,000, Smith was entitled to retain his individual share in the mortgage, $4,143.13. The balance only—$856.87—is claimed to be infants' property. This check was indorsed by George Condit Smith individually, was transferred to Mrs. Emma Smith, and by her deposited in the Fifth Avenue Bank. On September 25, 1894, the mortgagor made another payment of $5,000, by check, to the

Digitized by Google

order of George Condit Smith, guardian. This was indorsed, "George Condit Smith, Guardian," was transferred to Mrs. Emma Smith, and by her deposited in the Fifth Avenue Bank. Twelve days later, George Condit Smith died. The complainant, suing as trustee, contended that $5,856.87 (the infants' share of the $10,000 paid in) was to be considered as real estate belonging to the testamentary trust created by Sallie Smith's will; that this money was received by Emma Smith with knowledge; and that complainant was entitled to follow and reclaim that sum. Subsequently, by an amended complaint, the appointment of Pennington as special guardian was set up. Prior to the commencement of the action, Mrs. Emma Smith's account in the Fifth Avenue Bank had been drawn down to a balance of $4,110.50. A preliminary injunction preserved the status quo until final hearing.

The case came up for hearing upon bill, answer, and proofs in June, 1895. The opinion of the circuit court will be found in 69 Fed. 188. That court held that plaintiff was properly appointed trustee, and was entitled to sue as such. There seems to have been no contention that the will of Sallie Smith did not create a trust, and no pretense was made that either of the defendants had any title to the trust fund, in which respect the subsequent appointment of Mrs. Emma Smith as guardian of the children under her husband's will works no change. "That appointment," in the language of the circuit court, "would not give her the right to hold funds which his will could not touch, and which he held only as trustee." That court also states that "no defense on the merits is urged, but the attempt is made to defeat the complainant by defenses in the nature of demurrers." Finding these defenses to be unsound, it held that of the first payment of $5,000, March 20, 1894, all but $856.87 was properly applied by George Smith to the extinguishment of his individual interest in the mortgage, and that, as there was nothing upon the check to indicate that it related to trust funds, Mrs. Smith could not be required to account for this $856.87, if she had checked it out in good faith. It further held that as to the $5,000 check of September 25, 1894, Mrs. Smith must be charged with notice that it was trust funds, but that she was not to be charged with so much of it as she may have paid to the deceased trustee, or disbursed by his direction for the purposes of the trust. And the case was sent to a master to ascertain and report what balance of the $5,856.87 there was in the bank, and how the rest of it had been disbursed. Much testimony was taken before the master, who reported that the balance in bank was $4,110.51; that the $10,000 represented by the two checks was deposited to the credit of defendant Emma Smith, who regarded said deposit as belonging to her husband, and drew her checks thereon as requested by him, and expended portions thereof under his supervision and direction; that she withdrew by checks on said deposit, and returned to her husband the sum of $3,220.75; that, with his approval, she paid and expended for his infant children interested in the estate a sum of, at least, $1,589.80; that, under like approval and authority, the sum of $1,078.94 was used to de-

Digitized by Google

fray household, medical, traveling, and incidental expenses of said George Condit Smith and his family, leaving a balance on deposit, as hereinbefore found, of $4,110.51. The master further reported that defendant Emma Smith did not treat said moneys as her own, to do with as she pleased, but as moneys subject to the order and direction of her said husband, and that she did not use any portion for her individual use and benefit, save as a member of the family of her husband, for which a portion was expended. And the master further reported his conclusions from these facts. Complainant filed exceptions to the master's report. Defendant filed no exceptions, apparently relying on certain testimony as to the "overpayment," which had been taken before the master by stipulation. The opinion of the circuit court upon final hearing on these exceptions and this evidence will be found in 75 Fed. 157. The result of final hearing was a dismissal of the bill. The reason for thus disposing of the case is succinctly stated in the opinion, as follows:

"With the sanction of the orphans' court of Essex county, New Jersey, there was deposited with the Central Trust Company of New York the sum of $88,900, in trust for the benefit of the minor children of George Condit Smith. This was in 1890 and 1891. The balance of the Crossley bond and mortgage—$7,500—is still in the hands of the trustee for the benefit of the infants, making a total of $96,400. It further appears that the entire trust fund due the infants under the will of their mother, including both real and personal property, was $95,338.43. In other words, the trust estate had already received $1,061.57 more than it was entitled to receive under the will creating it. That being so, it is hard to discover any principle of equity which will justify the court in taking $5,000 more from the estate of the deceased trustee, and adding it to the fund of the infants."

From other remarks in the opinion, it may be inferred that the judge supposed that complainant practically conceded that the defendant Smith was equitably entitled to the relief she asked for, and that the only grounds of objection to her obtaining it in this action were wholly technical. The judge evidently assumed that it was not disputed that the entire trust fund due the infants under their mother's will was only $95,338.43. We do not, of course, know how the case was presented on argument below; but in this court the appellant vigorously disputes these conclusions, and the soundness of his contention can be determined only from the record presented here.

This statement of the facts is unusually long, but it is thought that a complete presentation of the facts will render unnecessary the discussion of many of the points of law which have been argued upon this appeal. Inasmuch as the judgment at final hearing was wholly in favor of defendants, the assignment of errors does not present the questions which were decided adversely to defendants on the interlocutory hearing, and which the circuit court did not thereafter reconsider. In order, however, to finally dispose of the whole case, all the points presented upon argument by both sides will be considered.

As to the So-Called "Overpayment."

By the account filed in the orphans' court it appears that George Condit Smith, as executor, paid to himself, as trustee, for his chil-

Digitized by Google

dren, $88,900. No one disputes this, but complainant suggests that whereas it appears by the receipts of the Central Trust Company that he deposited with that company for the infants, at one time, 60 $1,000 bonds of various railroads, and, at another time, 30 similar bonds, it does not appear what, as trustee, he paid for these bonds, or whether they were then worth $88,900. Complainant therefore contends that if the filed account is not to be treated as a finality, if it is to be opened to allow defendant, as George Smith's executrix, to make claim for an overpayment, the facts upon which such overpayment is asserted should be proved by competent evidence dehors the filed account. The infants' share of the real estate is, concededly, $13,356.87. If, therefore, it should be found that the infants' share of residuary personal property was $88,900, then they would be entitled to $102,256.87, but have only received $88,900 (assuming the bonds were bought for that sum) plus $7,500, the balance of the Crossley mortgage, making in all $96,400 only.

What, then, are we to take as the infants' share of the personal property? We begin with a finding of the orphans' court that it was $88,900, for that court found Smith's executor's account "to be correct in all particulars," and "allowed [the same] as reported," and certain items of Schedule F of that account are of payments to the infants' trustee, aggregating that sum. If such payments were found by the orphans' court "to be correct," that court must have held that the infants' trust fund was entitled to receive $88,900. Defendants' contention, however, is that such finding is not correct, and that all parties being now before the circuit court, sitting in equity, the proper correction can be made, such correction being properly inferable from the account itself. That complainant's opposition to this attempt collaterally to review the decision of the orphans' court is by no means wholly technical will be apparent when the account itself is examined. Its summary is as follows:

Debtor.

This executor charges himself as follows:

To amount of inventory	$184,392 77
" " " interest received as per Schedule A	6,496 00
" " " increases in value over inventories, as per Schedule B.	22,425 00
" " " one pair horses omitted from inventory, appraised value	400 00
" " " schedule of balance, being amount overpaid by the executor	13,826 89
	$227,550 66

Credits.

This executor prays allowance as follows:

By amount paid for funeral and medical expenses, as per Schedule C.	$ 2,582 68
" amount of claims of creditors allowed and paid, as per Schedule D.	5,143 26
" amount of general expenses of the estate and family since the decease of testator, as per Schedule E	12,619 72
" amount of moneys paid to legatees, as per Schedule F	206,505 00
" amount of errors in inventory, as per Schedule G	700 00
	$227,550 66

Digitized by Google

It thus appeared that the total amount realized by the executor from every source was $213,023.77. This sum is ascertained by adding together the first four items on the debtor side, and deducting the $700 for errors in inventory, as per schedule G. The executor, however, had paid out $226,850.66, which is the aggregate of all the credit items except the $700 for errors in inventory. Manifestly, he had "overpaid" $13,826.89; but on which schedules did he overpay it? That was a question to be decided by the orphans' court, and certainly that court never would have passed the account while there remained such an unanswered question. The answer would have been found by a careful examination into all the items of the account, and, when found, the proper corrections would have been ordered before final approval of the account would be adjudged. The executor, however, withdrew such question from the consideration of the court, by charging himself with the overpayment; and, there being no longer any such question, the executor thus, in open court, withdrawing all claim to reimbursement for overpayment, his account was allowed as filed. He now asks, or, rather, his executrix on behalf of his estate asks to be allowed to charge that overpayment against one only of the schedules, and against the items on that schedule representing payments of residuary legacies, contending that the residuary personal estate should be taken as $163,963.11 only, and the infants' one-half as $81,981.56; thus seeking to go behind the decree of the orphans' court, but at the same time insisting that such decree is to stand as an approval of the other schedules, C, D, and E. There seems to us to be no equity in such a contention. Either the decree of the orphans' court must be accepted as final, or else the executor's representative must allow a re-examination of all the questions settled by the court. This court cannot go back of that decree only so far as may help him, and come to an abrupt stop as soon as a revision of the account may hurt him. The orphans' court had jurisdiction to make this decree, and its decision should not be reviewed collaterally here; for this court is wholly without the evidence which that court might have had, had this question been raised there. Certainly, this court cannot assume that, if the executor had not of his own motion charged himself with his improvident overpayment of $13,826.89, the orphans' court would have approved all the items which make up Schedules C, D, and E. From what is shown of George Condit Smith's generous, free-hearted disposition and loose business methods, it is reasonable to suppose that part, at least, of his improvident overpayment, will be found in these schedules. It appears that, under the practice in New Jersey, it is customary and proper to charge the estate of a deceased person with the general household and family expenses for a year after death; but surely the amounts charged for such expenses must be reasonable, and not extravagant. As shown above, the executor charges $12,619.72 for such expenses, and the items of the schedule include $635 for a carriage, $335.95 for harness, and nearly $700 for livery-stable bills. These charges may

Digitized by Google

be right and proper under the New Jersey practice, but that is a question for the New Jersey court to determine. This court certainly cannot pass upon it without any proof. Again, it will be noted that the total income of the estate during the year is given, in Schedule A, as $6,496. This includes an item of $1,102 for discount on a cash payment of specific legacy of $23,000, so that the actual income was $5,394 only. It is certainly inconceivable that an orphans' court would approve of charges for household and family expenses during the year after death, which would use up the whole income, and over $7,000 of the principal besides. Of course, so long as the executor stood before the court, charging himself with a sum greater than the whole amount of these general family and household expenses, there was no necessity for reviewing any of these items; but it would be clearly inequitable to allow his representative now to alter his account by striking out any part of the charge against himself without again presenting his claim of credits under Schedules C, D, and E for examination and revision.

For these reasons, we are of the opinion that the wholesome rule which accepts the adjudication of a competent court as a settlement of the questions before it should not be departed from or qualified in this case.

As to the Estate Created by the Will.

Defendants contend that no trust was created by the will of Sallie Smith. It would seem reasonably plain from the clause of the will cited at the beginning of this opinion that the testatrix intended to create a trust, and used words apt for the purpose when she wrote: "I give and bequeath [this estate] absolutely to my children, but direct that my husband shall hold the same in trust for them during minority." But there need be no extended discussion on this point. What form of words may be required to create a testamentary trust in New Jersey is a question of local law. The court of chancery in that state, by its appointment of complainant as trustee, has indicated that, in its opinion, there is a trust to be administered. No reason is shown for declining to follow that ruling in the federal courts.

As to Complainant's Right to Sue in a Federal Court.

Diversity of citizenship between the parties is set up in the amended bill, and proved. Whether complainant be regarded as a testamentary trustee under the will, or as a special guardian under the New Jersey statute for the sale of infants' real estate, he is certainly not a mere guardian ad litem or next friend, as in the cases cited by appellees; and it is on his citizenship, not on that of those he represents, that the jurisdiction of the federal courts must stand. Coal Co. v. Blatchford, 11 Wall. 172. That complainant, as trustee or special guardian, may sue without ancillary appointment; that there was nothing in the case to justify the circuit court in declaring the action of the court of chancery in appointing him to be improper; that the New Jersey court did not lose jurisdiction because George Condit Smith moved to New York, and died here,—were the con-

Digitized by Google

clusions of the circuit court, and it is sufficient on these points to refer to its opinion on the interlocutory hearing.

And the same may be said of the contention that the action is one for money had and received, and should have been brought on the law side of the court.

To the proposition that the proceeding under the New Jersey statute to sell infants' land can only be maintained when the title to the real estate is in the infants, not when it is in a trustee, it is sufficient to say that the court of chancery of New Jersey, apprised of the fact that title to this real estate was in a trustee, nevertheless ordered its sale under that statute. It may fairly be assumed that the court of chancery correctly interpreted the statute of its own state.

The Amount for which Defendant Emma C. Smith should Respond.

We are clearly of the opinion that upon the evidence as to the first $5,000 check, of March 20, 1894, she is not chargeable with knowledge that any part of the same was trust funds, and not money to which her husband was himself entitled. She had been informed by Pennington that the interest of her husband in the Crossley mortgage was $4,143.13 only, and by her husband that he was entitled to the whole amount of that mortgage. When he brought her for deposit a check for $5,000, drawn by Crossley to himself personally, she might with reason believe that her husband's statement was correct, or, at least, that $5,000 of the mortgage belonged to him individually. Inasmuch as, long before this suit was brought, she returned part of this money to him, and spent the residue in accordance with his directions or with his assent, she cannot be held responsible for it, and it is wholly immaterial to inquire for what she spent it. Even if she spent it on herself, or used it to repay some of the many loans she had theretofore made to her husband, she is under no obligation to account for it to the complainant, who does not represent George Condit Smith individually, from whom, as an individual, she received the money.

The second $5,000 check, of September 25, 1894, however, was drawn to her husband's order, as "guardian," and indorsed in like manner. While we find no evidence in the case which will warrant the finding that she was a fraudulent transferee, we are satisfied that she must have known that these were trust funds, a part of the infants' estate, which had formerly been invested in this Crossley mortgage, and that she is to be treated as a banker who is chargeable with knowledge that, in the general account of his customer, there have been deposited moneys which such customer holds in trust for another.

We do not understand that defendants dispute the finding of the master that, out of the moneys so received from George Condit Smith, there remained in the Fifth Avenue Bank, on the day Emma Condit Smith's balance was impounded by preliminary injunction, the sum of $4,110.50; nor that, if the other points raised (as to noncreation of trust, incompetency of complainant to sue, overpayment by Smith, notice to defendant that the $5,000 check represented trust money, etc.) be decided adversely to defendant, that sum

Digitized by Google

belongs to the trust, and the trustee is entitled to recover it. The only question remaining is as to $889.50, the amount disposed of by her out of the second $5,000, before injunction. Of this it appears that on October 3d she returned to her husband $75.75. This she had a right to do. From him, as trustee, she received it; against his demand for its return, so long as he remained trustee, she could not hold it; and, returning it to him, she was entitled to rely on his disposing of it as the trust required. As to the balance of $813.75, she shows the payment by her, under her husband's direction, or with his assent, of considerable sums for clothing and support of the children. Whether the sums applied by George Condit Smith from the income of the trust fund to the "support, maintenance, and education" of the infants were extravagant or not, is a question with which the court has no concern. By her will, Sallie Smith left that matter to her husband, declaring that his determination thereon should be "final and without appeal or question." He was given an equally large discretion as to managing and investing the principal, but that gave him no authority to divert such principal, and apply any part of it to the "support, maintenance, and education" of the infants. The judge who heard the case in the circuit court has forcibly expressed this distinction:

"Undoubtedly, the will * * * gave him a large discretion. He might have wasted the entire fund by bad investments, and the complainant would be remediless. It is even possible that had he invested the fund with the defendant, taking nothing but her unsecured note in return, the transaction could not be questioned. But there is no pretense of anything of this kind. A trustee cannot despoil the trust by turning the property into money, and handing the money to his wife. Putting the property out of his hands is not investing it."

The second $5,000, received on the Crossley mortgage, was principal; and George Smith had no right to use it himself, or to direct his wife, as his banker, to pay it out for "maintenance or support" of the infants. Mrs. Emma Smith is chargeable with knowledge that this particular sum belonged to the infants' principal, and no payments for such purposes made from it, even under her husband's directions, are properly chargeable against the fund thus held by her with notice of its character. The trustee is therefore entitled to the $4,110.50 still in the bank, and to the $813.75 which she has paid out,—a total of $4,924.25.

The facts warrant a finding that when George Condit Smith deposited the second sum of $5,000 with the defendant, to be held by her subject to his future directions, the deposit was made and received upon an understanding that the bailee was not to pay interest. When, however, George Smith having died, and a new trustee having been appointed in his place, demand was made by such new trustee for the return of the money, the defendant was in default for failure to do so, and interest would begin to run. Nor is it any ground for refusing to allow interest that part of the proceeds was impounded in the Fifth Avenue Bank by the injunction order. Defendant could have released it at any time by withdrawing any further opposition to the claim of the new trus-

Digitized by Google

tee. If, however, it be made to appear to the circuit court that the Fifth Avenue Bank pays interest at some agreed rate upon daily balances, the amount thus earned from the bank by the fund should be deducted from the interest to which, as against the defendant Emma C. Smith, the complainant is entitled, viz. at legal rates on $4,925, from October 18, 1894, the date of commencement of this suit.

The decree of the circuit court is reversed, with costs, and cause remitted to that court, with instructions to enter a decree in accordance with this opinion.

(78 Fed. 411.)

ROBERTS v. BROOKS.

(Circuit Court of Appeals, Second Circuit. January 7, 1897.)

1. CONSTITUTIONAL LAW—TITLES OF ACTS.
   The legislature of New Jersey, in 1861, by an act entitled "An act to authorize the construction of a dock or wharf on Toms River," authorized H. & D. to "erect and maintain" a dock or wharf in front of their lands on Toms river, to collect wharfage for the use thereof, and to hold and enjoy the same, to themselves, their heirs and assigns. *Held*, that the object of the act was sufficiently expressed in its title, under article 4, § 7, cl. 4, of the constitution of New Jersey.
2. LEGISLATIVE GRANTS—TRANSFER OF TITLE—WHARVES.
   Held, further, that it was unnecessary that such legislative grant should be supplemented by a formal instrument under the seal of the state, in order to convey title.
3. SAME—ADVERSE POSSESSION.
   Held, further, that the fact that when the act was passed the title to the upland was in H. alone, and not in H. and D., could not affect the title of a grantee from H. and D. after 35 years' possession of the wharf by them and their heirs and assigns.
4. SAME—PRIVATE AND PUBLIC WHARVES.
   Held, further, that the words of the act were sufficient, under the law of New Jersey, to convey a fee in the wharf to the grantees, and the wharf did not become a public wharf, subject to the use of the public on payment of wharfage. O'Neill v. Annett, 27 N. J. Law, 290, followed.
5. SAME—CERTAINTY OF GRANT.
   Held, further, that the grant was not void for uncertainty, exactness of location having been supplied when the dock was built.
6. SAME—ACCRETIONS.
   Held, further, that, absolute ownership of the dock and the shore being shown, a small piece of land, formed by accretion, in the angle between the dock and the shore, belonged to the shore owners. 71 Fed. 914, affirmed.

Appeal from the Circuit Court of the United States for the Southern District of New York.

This is an appeal from a decree of the circuit court, Southern district of New York, which directed the specific performance by the defendant of a contract between the parties for the sale and purchase of a tract of land, comprising about 15 acres, situate at Toms River, Ocean county, in the state of New Jersey. The making of the contract, and refusal by defendant to perform it, are admitted. The answer denies that complainant is seised in fee of the premises, or, rather, of certain substantial parts thereof, and avers that she is unable to give a good title thereto. The opinion of the circuit court is reported in 71 Fed. 914, and may be consulted for a full statement of the case. Some of the points urged upon that

Digitized by Google

court, and decided adversely to defendant, have not been argued here, and will not be discussed in this opinion.

Henry E. Parsons, for appellant.
Enos N. Taft, for appellee.

Before LACOMBE and SHIPMAN, Circuit Judges.

LACOMBE, Circuit Judge. A substantial part of the property bought by defendant is known as the "Dock Lot." It contains $^{50}/_{100}$ of an acre, more or less, and is described by metes and bounds in the contract of sale. The evidence shows this lot to be partly original shore and partly made land, a dock of solid filling having been built out from the shore. No objection is raised to the title to so much of this plot as was originally natural shore, except that it is claimed to be subject to a right of way. It is insisted, however, that complainant has no title "in fee simple, free from all incumbrance," to the made land. The original source of title to this made land is found in an act of the legislature of the state of New Jersey passed February 28, 1861, entitled "An act to authorize the construction of a dock or wharf on Toms river, in the county of Ocean," and which provides as follows:

"Section 1. Be it enacted by the senate and general assembly of the state of New Jersey. That John B. Horton and Charles L. Davis be and they are hereby authorized and empowered to erect and maintain a dock or wharf in front of their lands on Toms river in the township of Dover, Ocean county, said dock or wharf to be built six hundred feet or more, at the option of the proprietors, along the channel of said river, and extending inland twenty-five rods, or as far as may be necessary for the improvement of the property of said proprietors or the benefit of commerce.

"Sec. 2. And be it enacted, that said John B. Horton and Charles L. Davis may be and they are hereby authorized and empowered to collect wharfage for the use of said dock or wharf, and shall be entitled to all the benefits accruing from the same, and to hold and enjoy the same to themselves, their heirs and assigns; provided however, that no such dock or wharf shall be constructed on said river by virtue of this act as may interfere with or obstruct the navigation of said river.

"Sec. 3. And be it enacted that this act shall take effect immediately.

"Approved Feby. 28, 1861."

Conceding that the title to the land under water was in the state of New Jersey, defendant contends that this act was ineffectual to convey the fee, for various reasons, which will be separately considered.

1. The constitution of the state of New Jersey (article 4, § 7, cl. 4), in force when the grant was made, provides that every law shall embrace but one object, and that shall be expressed in the title. Manifestly, the act is not obnoxious to this provision. The sole object of the act is to authorize the construction of the dock, and that object is expressed in the title. That object is accomplished by granting to the individuals the authority and power to erect and maintain the dock; to collect wharfage for its use, with title to all the benefits accruing from such structure; to hold and enjoy the same, to themselves, their heirs, and assigns. What sort of a title, under the laws of New Jersey, this form of words gives to the grantees, who are thus authorized to erect and maintain the dock, and to hold and enjoy, to themselves, their heirs and assigns,

Digitized by Google

all the benefits accruing from such erection and maintenance, is a different question. Whether docks constructed by private persons under authority by the state shall be temporary or permanent structures is a question of state policy. If such construction gives to the grantee under the law of the state a permanent right to the exclusive enjoyment of the dock thus built, with absolute dominion over it, the title of an act which indicates the intention of the legislature to give to some one the right to build such a structure sufficiently expresses the object of the act.

2. The objection that the legislative grant was not supplemented by a formal instrument bearing the seal of the state, etc., is frivolous. See Rutherford v. Greene's Heirs, 2 Wheat. 196.

3. It is next objected that the grantees, Horton and Davis, are by the act authorized and empowered to erect and maintain the dock in front of *their* lands on Toms river, whereas the records show that at the time the act was passed the fee of the upland was in Horton alone. Whether Davis then had or had not any interest in the upland does not appear. The dock was built by the grantees, and subsequently Horton conveyed the fee of the upland to Davis, and the grantees, their heirs and assigns, have held and enjoyed the dock for 35 years. It is difficult to see upon what principle, in view of the presumptions thus arising, it can be contended that the act of the legislature was inoperative, and the title of the grantees defective. This objection seems not to be included in the assignment of errors.

4. It is next objected that the language of the act does not convey a fee; that the dock or wharf erected under it became a public dock or wharf, which the public would have the right to use upon the payment of wharfage. There might be much force in this objection, were it not that the property in question is located in the state of New Jersey. What form of words shall be sufficient, either between private parties or between the state and individuals, to convey a fee simple absolute of real estate, is a matter of local law, where the federal courts will follow the rulings of the state tribunals. In the case of O'Neill v. Annett, 27 N. J. Law, 290, it appeared that defendant, who owned a piece of upland on the Hudson river, had built two wharves in front of the property, extending out into the river about thirty feet below low-water mark. This he did without any grant or permit, but subsequently, in 1844, the legislature passed an act declaring "that it shall and may be lawful for the said Robert Annett, his heirs and assigns, to keep up and maintain his said wharves * * * in the same manner as fully to all intents and purposes as if an act of the legislature had been first passed authorizing and making it lawful for him or them to build and erect the same." The act, in similar language, authorized the extension of said wharves, and the building and erection of others in front of the said upland, provided such wharves "shall not obstruct the navigation of said river." It further provided that it "shall and may be lawful for said Annett his heirs and assigns to demand receive and collect compensation from any person or persons using said wharves for any purpose what-

Digitized by Google

ever." It will be observed that the phraseology of this act is substantially the same as that of the one now under consideration. A subsequent statute made it unlawful for the owner or captain of any steamboat to land, etc., at Annett's wharf, after notification not to do so. The plaintiff owned a vessel,—apparently not a steamboat,—and had been refused permission to discharge a cargo of coal at the wharf. There being no evidence of a dedication of the wharf to the public, the court of errors held that, upon the facts above set forth, the plaintiff should be nonsuited. The following excerpt from the opinion seems controlling of the question raised here by appellant's objection:

"The right to the exclusive use of the wharf by an individual cannot depend upon the question whether the wharf is constructed above or below low-water mark, or whether the shore is or is not publici juris, but solely upon the question whether, in fact and in law, the title to the wharf is vested in the individual, no matter how that title may have been acquired. By the common law of this state, wharves erected by the shore owner below tide, and within the limits of the jus publicum, vest in the shore owner. It was so held by all the court in Gough v. Bell, 22 N. J. Law, 441. The judges, it is true, differed as to the foundation and nature of the right of the shore owner, but all agreed that when the land was reclaimed, or the wharf erected, by the tacit or express consent of the legislature, it became private property, and divested of its public character. And *the owner has the same absolute dominion over it, the same absolute right of enjoyment in it, that he has in and over other private property.*"

Appellant, in his supplemental brief, reiterates the assertion that in O'Neill v. Annett, 27 N. J. Law, 290, the words "private property" were used simply to distinguish dock property held by private persons from public property, which was untaxable, and that O'Neill v. Annett "in no way determined that such docks are not public docks that may be used by the public on paying dockage." Inasmuch as the single issue in O'Neill v. Annett was whether the owner of a coal barge was entitled to land and discharge cargo at the dock on paying dockage, it is difficult to explain the assertion in the brief.

5. The objection that the grant was void for uncertainty is without merit. The circuit court correctly held that exactness of location was supplied when the dock was built.

6. Absolute ownership of the dock and the contiguous shore being shown, the small piece of land which has formed by accretion in the angle made by the easterly line of the dock and the shore line of the large parcel goes with the land to which it has accrued.

Appellant further objected to the title on the ground that part of the property was incumbered by an easement in the form of a right of way. The circuit court held that the evidence showed the right of way to be outside of the premises. Why appellant, in the face of this evidence, still insists on this objection, it is difficult to understand. It is not easy, without a map, to indicate the situation, but the following description may be sufficient: The original shore line of high-water mark runs about east and west, and the made wharf projects therefrom southerly into the river about 150 feet. About 50 feet to the north of this original shore line is Water street, laid out 30 feet wide, and running parallel to the shore from the westward until it meets Dock street. Dock

Digitized by Google

street runs northerly inland from Water street. It is laid out 40 feet wide, and, if prolonged southerly from Water street, it would strike the original line of high-water mark a little westerly of the eastern line of the wharf. Originally Horton owned all the land on both sides of Water street, and on both sides of Dock street. He conveyed by a deed (undated in the record here, but which counsel agree should be dated October 4, 1867) to one Hadley a plot of about 8¼ acres, lying west of the middle line of Dock street, and north of the middle line of Water street. It contains the reservation of a right of way as follows:

"Reserving to ourselves, our heirs," etc., "in common with said Hadley, his heirs," etc., "a right of way twenty feet in width to and from the dock, on the eastern side of said lot [herein conveyed]. Also reserving another right in common as aforesaid fifteen feet in width across the dock on the south side thereof."

It is unnecessary to quote the language of the contract in suit. Suffice it to say that, in warranting the title to be free from incumbrances, it excepts "the easement of Dock street."

Appellant seems to have formed the impression that the language in the deed to Hadley created some right of way beyond the southerly end of Dock street across the 50-foot strip of original shore lying south of Dock street. The only apparent ground for this contention is that the reservation uses the words "to and from the dock." A careful examination of the deed itself, however, shows that the word "dock" was used, as covering the entire completed wharf, which, of course, was part original bank and part filled-in land. This would be a most natural use of the word after the dock was built, and it was built years before. That it was used in this sense in the Hadley deed is apparent from the description. The second course runs along the middle of Dock street to a stone, which the distance given shows must have been in Water street. The third course is given from this stone N., 83° W., which is the course of Water street, "to a stake." Manifestly, this stake must be in Water street, but it is described as "a stake in said dock line." Moreover, the second right of way of 15 feet on the south side of the lot conveyed is proved by the description to be the northerly half of Water street, but it is described as "fifteen feet in width *across the dock*." It may be added that the contract in suit uses the word "dock" in the same sense, for the plot set out by metes and bounds—its northerly boundary being given as "along Hadley's southerly line," which, as we have seen, is in the middle of Water street—is described as being "a part of what is known as 'Horton's Coal Dock.'" Finally,—and no further answer to appellant's point is needed,—the right of way in the Hadley deed is one reserved out of the premises conveyed to him. There is no grant or reservation of anything in the property not conveyed by the grantor.

There is nothing to add to the opinion of the circuit court as to the sufficiency of the deed of John and Mary Falkinburgh (husband and wife) to convey the title to property, the fee of which belonged to the wife. The brief asserts that "by the laws of New Jersey it did not operate to convey the wife's interest," but neither statute,

Digitized by Google

authority, nor argument is presented to support this assertion. The indenture which is executed by both John and Mary recites that it is made "between John Falkinburgh and Mary, his wife, of the village of Toms River," etc., "of the first part, and Charles L. Davis," etc., "of the second part," and proceeds as follows: "Witnesseth, that the said party of the first part, for and in consideration of one thousand dollars, lawful money of the United States, to them in hand well and truly paid by the said party of the second part at or before the sealing and delivery of these presents, the receipt whereof is hereby acknowledged, and the party of the first part therewith fully satisfied, contented, and paid, hath given, granted, bargained, sold," etc., "and by these presents do give, grant, bargain, sell," etc., "to the said party of the second part, and to his heirs and assigns forever," the land therein described. The covenants are made by John Falkinburgh alone. More than a century and a half ago the colony of New Jersey expressly provided by statute that "all deeds or conveyances made or to be made by a man and his wife of the estate of the wife [when properly acknowledged] shall be good and sufficient to convey the lands, estate or rights thereby intended to be conveyed." 22 Geo. II. (A. D. 1743) c. 87, § 3. As the defendant refers to no later statute or decision in any way qualifying this plain and explicit provision, his objection is frivolous.

As to the alleged defects in the title to so much of the premises as were the subject of the foreclosure suit of McKean v. Horton, and of the subsequent suit to quiet the title brought by Sophia H. Davis against the widow, children, and next of kin of Horton, we deem it unnecessary to add anything to the opinion of the circuit court. The objection is unsound. The decree appealed from is affirmed, with costs.

(78 Fed. 450.)

COLORITYPE CO. v. WILLIAMS.

(Circuit Court of Appeals, Second Circuit. January 7, 1897.)

1. REVIEW ON ERROR—VERDICT—WEIGHT OF EVIDENCE.

   The circuit court of appeals cannot set aside a general verdict on the ground that it was against the weight of evidence, or upon a guess as to the mental processes by which the jury reach the conclusion expressed therein.

2. LANDLORD AND TENANT—INTERPRETATION OF LEASE—MODIFICATION.

   A lease made in August demised the four upper lofts of a building then in course of erection for five years from February 1st following. In September the parties made a further written agreement, whereby the lessor stipulated to have the premises ready for occupancy on February 1st, excepting certain minor details, and that he would give the lessees possession at as early a date before February 1st as he could have the lofts in suitable condition; the rent, however, to commence February 1st, "or as soon thereafter as the building is completed." If the premises were not ready for occupancy on that day, the lessor was to forfeit $50 a day thereafter, etc. *Held*, that this did not so modify the lease as that the lessee would not be liable for rent, and would be entitled to the daily penalty, until the whole building was completed, but merely bound him to have the leased lofts ready on February 1st, except the minor details mentioned.

Digitized by Google

3. SAME—PAROL EVIDENCE.

Held, further, that there was no such ambiguity in the contract as would warrant the introduction of prior oral negotiations or understandings.

4. REVIEW ON ERROR—HARMLESS ERROR.

A lease of part of a building then in course of construction required "it to be fireproof." In an action for rent, etc., where defendant set up that the building was not fireproof, plaintiff, who was an architect, testifying in his own behalf, after describing the construction of the building in this respect, was allowed to state that "that mode of construction is commonly called fireproof" in his profession. *Held*, that if this was error, it was rendered harmless by the subsequent introduction of the building law containing the definition of a fireproof building, together with evidence by the plaintiff, without objection or contradiction, that the building was so constructed.

5. TESTIMONY OF PARTIES—REQUESTS TO CHARGE.

A requested charge, directing the jury to remember that plaintiff "is the most interested party in the controversy," that they are to receive his testimony with caution, and are empowered "to reject any evidence which is uncorroborated, even though it be uncontradicted," is properly refused.

6. REQUESTS TO CHARGE—ORAL MODIFICATION.

Defendant submitted a written request, marked "E," containing manifestly objectionable clauses, and after the general charge orally asked the court to give his request, marked "E," repeating it with slight verbal changes, which, however, much modified its objectionable features. *Held*, that the court was warranted in inferring that he referred to the request as written, and in refusing to give it.

This is a writ of error, brought by the plaintiff in error, who was defendant below, to review a judgment in favor of defendant in error (plaintiff below), entered in the circuit court, Southern district of New York, upon the verdict of a jury.

Williams, the plaintiff, was an architect and builder, and the owner of the premises at No. 32 Lafayette Place, in the city of New York. He constructed a building thereon, and leased the four upper floors to the defendant. The lease was made while the building was in process of erection, and Williams agreed to complete it in accordance with certain plans agreed upon between the parties. He also, at the request of defendant, and independent of the written contract, did a considerable amount of work on the floors so let in order to adapt them to the requirements of defendant's business. This action is brought for rent unpaid under the lease for the months of February and March, 1894, for the value of this special work done at defendant's request, and for services in running the steam plant in the building. This last item was disallowed by the court, and, since plaintiff below sued out no writ of error, is not before this court. The defendant did not dispute the charge for special work, except as to about $1,460, upon which contention it prevailed at the trial. Plaintiff has not sought to review the decision as to this $1,460, and that item is not before the court. The defendant denied that any rent for the period sued for became due under the lease as modified by a certain collateral agreement. It also set up five counterclaims. The first ($75 for steam power furnished to plaintiff after the period sued for) was allowed, and is not here for review. The third (for damages by reason of improper construction of the skylight) was left to the jury to decide. It is conceded that the amount of this counterclaim, if allowed, was $71.50, and the jury were so instructed. The second counterclaim (for cost of moving radiators alleged to have been improperly placed) and the fourth (for excess of fire insurance premiums claimed to have been the consequence of a failure to make the building fireproof) were disallowed. The fifth counterclaim was for damages for delay in completing the building under a penalty clause contained in the agreement between the parties. This counterclaim also was submitted to the jury. Inasmuch as it was admitted that plaintiff was entitled to recover $3,574.19 for the extra work, and only $146.50 was to be deducted for the steam and the skylight, and the plaintiff conceded only $250 to be due from him under the penalty clause, and insisted upon an additional sum for rent, it is manifest from their verdict of only $2,548.69 that the jury found against the plaintiff both on the question of rent and on that of penalty for delay in completing.

Digitized by Google

J. Aspinwall Hodge, for plaintiff in error.
David B. Ogden, for defendant in error.

Before LACOMBE and SHIPMAN, Circuit Judges.

LACOMBE, Circuit Judge. It will be seen from the above statement of facts that a part only of the questions which were litigated in the circuit court are presented here for review. The several objections to the judgment which have been submitted on the argument will be separately considered.

The court charged the jury that "by the terms of the contract between the parties at all times after February 1st the plaintiff was either bound to pay the stipulated penalty or was entitled to receive the stipulated rent; and the date when the penalty ceased and the rent began was the same." Such objections as have been urged to this part of the charge as not correctly construing the contract between the parties will be considered hereafter. It is quoted here as introductory to the first point of plaintiff in error, in which it is contended that the verdict cannot be sustained even if it is held that the contract was properly construed by the trial justice. Plaintiff conceded that under such construction the building was not completed ready for occupancy on February 1st, the date when rent was to begin, provided plaintiff had fulfilled his covenants, but contended that it was so completed on February 6th. Defendant contended that it was not so completed as to terminate the penalty clause, and make defendant liable for rent, until April 2d. It is urged here that the court should have instructed the jury to decide this contention in favor of the defendant. The record, however, shows that there was a conflict of testimony as to the day when the building was completed within the terms of the contract as the court construed them. It was not error, therefore, to leave that question to the jury; on the contrary, it would have been error to take it from them. The defendant, however, seeks to show by an analysis of the verdict that it is to be assumed that the jury fixed upon some day other than February 6th, or April 2d, which supposed date the evidence does not sustain. That question is not before this court. If the verdict is supposed to be against the weight of evidence, that point should be raised by motion for a new trial; and the decision of the trial judge on that point is not reviewable by writ of error in the federal courts. Upon conflicting evidence the question was submitted to the jury—properly so submitted, since it is apparent that the evidence was conflicting—with instructions to bring in a general verdict; and their general verdict upon such conflicting evidence, not having been set aside by the court, must stand here as a finding of fact that at some date subsequent to February 6th the building was completed, the running of the penalty clause stopped, and liability for rent incurred. If defendant wished to have the jury fix that date specifically, it should have asked for a special verdict upon a question properly framed. This court cannot set aside the general verdict upon a guess as to what was the mental process

Digitized by Google

by which the jury reached the conclusion which they have expressed therein. Moreover, we find no assignment of error which covers this point.

The main question in the case is whether the trial judge correctly construed the contract between the parties, and properly instructed the jury thereon. The lease was executed August 30, 1893. It demised to defendant the four upper lofts of the building known as "No. 32 Lafayette Place" for the term of five years from February 1, 1894; the lessee covenanting to pay $15,000 a year, in equal monthly payments on the 1st day of each month. Subsequently, on September 7, 1893, the parties entered into a further written agreement, in substance as follows: It recites that defendant has executed the lease, and obligated itself, under the covenants thereof, upon the express condition that all the agreements hereinafter in the agreement contained shall be fully performed by plaintiff. Williams covenants and agrees that the building now in course of erection shall be practically completed in compliance with the plans, * * * which * * * provide for the erection of a substantial eight story and basement fireproof building, * * * and on the top loft a suitable skylight or skylights, providing the same are acceptable to * * * the building department, * * * and not objectionable to the board of fire underwriters. Also that the building is to be furnished with freight and passenger elevators, etc. Williams further stipulated that:

"He will have the premises ready for occupancy by defendant on or before February 1, 1894, excepting, however, such minor details as gas fitting, steam fittings, painting, and the various nonessential and minor details of the said buildings as cannot be completed on or before February 1, 1894.

"*That he agrees to give the [defendant] possession of the premises leased to them at as early a date before the first day of February, 1894, as he can have the lofts in suitable condition ready for occupancy, or for them to place their machinery in; but the rent to commence on February 1, 1894, or as soon thereafter as the building is completed.*

"That in case the building is not ready for occupancy on the first day of February, 1894, the measure of damages shall be a forfeiture of fifty dollars ($50.00) per day during the month of February, and one hundred dollars ($100.00) per day during the month of March and thereafter.

"But it is covenanted that, in the event of the said John T. Williams being prevented from completing the said building on the first day of February, 1894, or later, by reason of the occurrence of a strike which shall prevent the completion of the said premises on or after that date, he shall be exonerated and held blameless of and from any or all liability by reason of the delay in the completion of said building caused by said strike."

The defendant has argued at great length that this agreement so modified the original lease that, although the premises leased might be ready for occupancy as that phrase is defined in the agreement, on February 1st, or some subsequent day, there would be no liability for rent, and defendant would be entitled to exact the overtime penalty until the whole building was entirely completed. There is no force in this contention. The italicized paragraph above quoted provides for the single case where the defendant is put into possession before the beginning of the lease. It is a parenthetical clause in no wise affecting the principal part of the

Digitized by Google

agreement, which provides in plain language that plaintiff will have the premises ready for occupancy, excepting the minor details, on February 1st; that, if not ready for occupancy then, the specified daily penalty shall be paid, unless the failure was due to the occurrence of a strike. The trial judge thus construed the contract between the parties as made out by the lease and agreement, and charged the jury accordingly. In this there was no error. Moreover, the contract is so plain and unambiguous upon its face that he correctly refused to admit evidence of oral conversations and negotiations prior to the making of the contract, which were offered upon the theory that they would elucidate alleged obscurities in the contract which, so far as we can see, do not exist. This disposes of most of the 46 assignments of error. They are too numerous to review in detail.

As to the second assignment of error which is referred to in the brief under this point, it is sufficient to say that the objection to the question put to the plaintiff: "Did you at any time agree with defendants that that building should be complete so that they could * * * commence * * * business there by February?"—did not state the ground now relied upon. The only point raised was that, if such agreement was in writing, the writing was the best evidence.

Upon the point that the court erred in refusing to charge the jury that they must find for the defendant on the counterclaim of $71.50 for cost of alterations to the skylight, it is sufficient to say that, in view of the testimony of defendant's foreman of the engraving department that before alterations "the skylight was all right," there was sufficient conflict of evidence to send that question to the jury. The evidence excluded as to the capacity of the floor to sustain the weight of defendant's presses was not so restricted as to bring the charge of alleged failure in that respect within the specific terms of the contract, viz. "five hundred pounds per square foot, as calculated by the formulas in use by [plaintiff]." The exclusion was not error. The judge also correctly excluded the testimony offered as to the location of the steam radiators on the eighth floor. There was nothing in the contract about putting the radiators in any particular place, and no direction was given to the plaintiff to put them in one place rather than another.

It is contended that there was error in allowing the plaintiff, after describing how the building was constructed with reference to security against fire, to state that "that mode of construction is commonly called 'fireproof' in his profession." We are not inclined to sustain this contention; but, if it were error to admit the evidence, it was harmless error. Subsequently the building law containing the definition of a fireproof building was put in, and it was proved by the evidence of plaintiff, without contradiction and without objection, that the building was thus constructed. Upon this state of the proof, with nothing to show that the building was not in fact fireproof, any evidence as to what premiums defendant paid for insurance was wholly irrelevant and immaterial, and was properly excluded. The point is now made that the plaintiff's

Digitized by Google

own testimony to the mode of construction was the only evidence on that point; that "it was not sufficient; it was improper; its introduction is reversible error." In view of the fact that the question which elicited the evidence was not objected to, nor any motion made to strike out the answer, and of the further fact that the judge charged "there was no adequate evidence that the building was not fireproof," to which there was no exception, it is a frivolous waste of time to raise such a point in the appellate court.

In defendant's replying brief there occurs this paragraph:

"It was incumbent upon the plaintiff to prove that the building was fireproof. If he did this, he did it solely by his own testimony, as pointed out by the defendant in error himself under this point. Manifestly, then, it was a question to be submitted to the jury, and not taken away from them, as it was, under the exception of the plaintiff in error."

Diligent search of the record has failed to disclose any exception to the court's action in taking this question from the jury. Since counsel should know what exceptions are preserved in a record and what are not, it is to be hoped that hereafter greater care will be exercised in citing them. It is an imposition upon the court to be constrained to go over the whole record, page by page, in hopeless search for an alleged exception which does not exist save in the exuberant statements of the brief.

The only remaining point argued upon the brief arises upon a refusal of the court to charge one of defendant's requests. Before the summing up, defendant, conformably to the practice of the circuit court, submitted written requests to charge. There were 30 of them in all. Among them was the following:

"E. In weighing the evidence the jury are to remember that the plaintiff is the most interested party in the controversy. They are to receive his evidence, therefore, with caution, as being that of a partial witness; and they are empowered to reject any evidence which is uncorroborated, even though it be uncontradicted."

Manifestly, such a charge would be improper. To instruct the jury that the plaintiff is more interested in a controversy than is the defendant, would be preposterous. The judge, naturally enough, did not embody this proposition in his colloquial charge. At the close of the charge defendant excepted to certain specified parts of it, and then the record proceeds as follows (defendant's counsel loquitur):

"I ask your honor to charge the defendant's request marked 'E': 'In weighing the evidence the jury are to remember that the plaintiff is an interested party in the controversy. They are to receive his evidence, therefore, with caution, as being that of a partial witness; and they are empowered to reject any evidence given by him which is uncorroborated, even though it be not contradicted.' The Court: I decline to charge that whole paragraph. (Exception by defendant.)"

It will be observed that two changes, brief in verbiage, but extensive in scope, were made in the oral restatement of this written request. The words "given by him" are inserted near the close of the sentence, so that it no longer instructs the jury that they may reject "any uncorroborated evidence," but only uncorroborated evidence of the interested party. The words "the most

Digitized by Google

interested" are changed to "an interested," so that the request is no longer obnoxious to the particular objection above referred to. Now, these changes, important though they are in their effect, are trifling in verbal expression, and not likely to attract attention upon an oral repetition of the modified request. When the trial judge was requested after the colloquium to charge "the defendant's request marked 'E,'" he would naturally suppose that his attention was directed to the marked request with which he had been furnished, and which he had already examined. If defendant wished a ruling upon some modification of that marked request, which he thus brought for the first time to the court's attention, he should have indicated the particulars in which he wished to modify it. Not having done so, his exception cannot avail him.

The judgment of the circuit court is affirmed.

(78 Fed. 460.)

SCULLIN v. HARPER.

(Circuit Court of Appeals, Seventh Circuit. February 11, 1897.)

No. 253.

1. SLANDER—WORDS SPOKEN OF EMPLOYE—ADMISSIBILITY OF EVIDENCE.
   In an action for slander, where the defendant claims that the words spoken were privileged, because spoken by him in good faith, as a stockholder in a corporation, to an officer thereof, concerning one of its employés, it is competent for the defendant to testify that what he said was upon information, without malice, in the belief that it was true, to state any relevant part of the conversation in the course of which he uttered the alleged slander, including statements made by him of the nature of the information he claimed to have, and also to testify to the purport of an entry in a book, claimed to be the basis of his statements, without producing the book itself.
2. SAME—PRIVILEGED COMMUNICATIONS.
   Communications, made by a stockholder of a corporation to an officer thereof, of matters concerning its employés, which, if true, are proper to be so communicated, are privileged, and, unless spoken with actual malice, the burden of proving which is on the plaintiff, do not give ground for an action for slander.
3. SAME—TRIAL—INSTRUCTIONS.
   In an action for slander, based on words, some of which are actionable per se, and others not, it is error to charge the jury that, if the defendant spoke the words, or any portion of them, actionable in themselves, the plaintiff is entitled to recover, since this leaves it to the jury to determine whether any portion of the words charged is actionable.
4. SAME—WRITING—PAROL EVIDENCE.
   The rule that parol evidence of the contents of writing is not competent does not apply to a writing which is collateral only to the issue and not directly involved.

In Error to the Circuit Court of the United States for the Southern District of Illinois.

Charles W. Thomas, for plaintiff in error.

Luke H. Hite, Charles P. Wise, and George F. McNulta, for defendant in error.

Before WOODS, JENKINS, and SHOWALTER, Circuit Judges.

Digitized by Google

WOODS, Circuit Judge. This was an action of slander. The trial resulted in a verdict and judgment for the plaintiff. Matters of inducement and innuendo omitted, the several counts of the declaration charge the utterance of the following words: "He is a dangerous man." "He is a perjurer." "He is a perjurer and a blackmailer." "He belongs to a gang that is organized in East St. Louis to extort money from our street railroad." "He went to Springfield, and swore to a lot of lies." "Another member of the gang is a relative of his, a Dr. Anthony, and between them they worked up a scheme, and got a judgment against us." These things, it is alleged, were said by Scullin, the plaintiff in error, concerning Harper, the defendant in error, in the presence and hearing of divers persons, on the 27th day of July, 1893, at East St. Louis. Error is assigned upon the rulings of the court in excluding evidence, and in giving and refusing instructions to the jury. Prior to July 27, 1893, Harper, who is a carpenter, had been in the employment of the East St. Louis Ice & Cold Storage Company as foreman of the ice gang, and shortly before that date had gone to Springfield as a witness for the plaintiff in a case in the United States circuit court against the East St. Louis Electric Street-Railroad Company, in which the plaintiff in error was interested as a stockholder, and had testified adversely to the company. The plaintiff in error, who resides in St. Louis, was also interested in the East St. Louis Ice & Cold Storage Company, owning a large amount of the stock, but was not an officer, agent, or manager of the company. W. S. Hodges, also a resident of St. Louis, was a director and the secretary and treasurer of the company, and in the absence of the president had supervision of its affairs; and it was in a conversation with him, and in the hearing of none other, on July 23, 1893, at St. Louis, that the plaintiff in error uttered concerning the defendant in error any of the obnoxious expressions complained of. Hodges, the only witness called to prove that the words were spoken, testified that between 11 and 12 o'clock on that morning Scullin came to his office in St. Louis, and requested him to go with him after dinner to the ice factory, saying "that there was a bad man there he wanted to get rid of"; that thereupon he named Harper, and used concerning him some of the expressions set out in the declaration; that two hours later he met Scullin, went with him across the river to East St. Louis, where, after and in consequence of conferences concerning which the testimony heard and offered is to some extent conflicting, Harper was notified of his dismissal from the service of the company. Scullin, as a witness in his own behalf, testified that when he called on Hodges in St. Louis he said, "I told Hodges what I had heard, and asked him to go over to East St. Louis with me, and investigate the matter," and that on their arrival at the office of the ice plant he requested the bookkeeper to bring in Harper's time book and to refer to a certain date, and thereupon was asked to state what the time book showed "as to the time that Harper worked on the day of the accident, and where he worked." The plaintiff objected to this question, and the court sustained the objection. Being then asked what he said to Hodges about Harper, and where

Digitized by Google

it was said, he answered: "It was in that office. I said, 'If this is true, then this is a dangerous man to have around here.' The gist of the conversation was in that office, after Mr. Hodges had investigated and found out what I desired to have him find out. It was after that. I made no remarks about this plaintiff until after we had found out what I desired Mr. Hodges to find out. I then said to Mr. Hodges, 'If this be true, he is a dangerous man to have around this plant.'" To the question whether he told Hodges to what facts he alluded by "if this be true," an objection was sustained, and the further question what the witness and Hodges both understood by "this being true" was not allowed to be answered. The witness was then asked, but not permitted to answer, whether at the time, from the facts that he had ascertained, he in good faith believed to be true what he said to Mr. Hodges, and whether or not at the time of his conversation with Hodges he had not been credibly informed, and did not actually believe, that his statements and representations to Hodges were true, "and made them with no ill feeling to the plaintiff, but with reference to his own interests."

The question of malice or good faith was an essential part of the issue, and it was certainly competent for the defendant, when called as a witness, to testify, if he would, that what he had said of the plaintiff was said upon information, without malice, and in the belief that it was true. If the truth of the proffered testimony was questionable, it was the province of a cross-examination into the source of the alleged information to expose the attempt at imposture. It is equally clear, because pertinent to the question of malice, that the witness should have been allowed to state any relevant part of his conversation with Hodges. If he told Hodges the source of his information, or what his information was, that was relevant and competent. It was, of course, not competent for the witness to state what Hodges understood, but the other questions were proper. The objection that what was said in the office at East St. Louis was not a part of the conversation testified to by Hodges as having occurred at St. Louis is not sound. Upon Hodges' own testimony, when the conversation began in St. Louis, it was in the contemplation of the parties to go to East St. Louis in reference to the subject of the interview, and according to Scullin it was not until after an examination of the time book at East St. Louis that he said anything derogatory of Harper except to tell Hodges what he had heard. The talk on both sides of the river was upon one subject, was essentially one conversation, and, under the circumstances, it was error to withhold any important part of it from the jury. The significance claimed for the entry in the time book was that it showed Harper at work at a time and place which made impossible the truth of his testimony in the case at Springfield against the street-railway company. The relevancy of the entry is therefore clear, and the objection that it could be proved only by the production of the book, or by an exemplified copy of the entry, is not tenable. The entry was not directly involved in the issue. It was merely a collateral incident, and the rule that excludes parol

Digitized by Google

evidence of the contents of a writing does not apply. 1 Greenl. Ev. § 89; Carter v. Pomeroy, 30 Ind. 438. The exact terms of the entry were not in question, and it was important only to know what Scullin understood its import to be.

The letter of Hodges, which was first admitted in evidence and afterwards excluded, was competent, brought out as it was upon the cross-examination, for the purpose of affecting the credibility of the witness. 1 Greenl. Ev. § 463, and notes.

The court was asked but refused to give a number of special instructions to the effect that as a shareholder in the East St. Louis Ice & Storage Company the plaintiff in error was privileged to speak freely with Hodges, a managing agent, concerning an employé of the company, and that his words, unless spoken with actual malice, of which the burden of proof was with the plaintiff, were not actionable. Whether these requests for special instructions were all unobjectionably worded, we have not considered. Upon the undisputed facts it is clear that the communications in question were of a privileged character. "So are all communications by members of corporate bodies, churches, and other voluntary societies, addressed to the body, or any official thereof, and stating facts which, if true, it is proper should be thus communicated." Cooley, Torts, 252. This doctrine the court ignored entirely in its charge, and, after stating that the "imputations" alleged "are actionable in and of themselves," told the jury "that if the defendant spoke and published the slanderous words as charged in the declaration, or any set or portion of them, actionable in themselves, then the plaintiff is entitled to recover." This expression, two or three times repeated, in substance, in the course of the charge, besides excluding the question of privilege, is objectionable because it left to the jury to determine whether any portion or any set of the words charged was actionable. See Railroad Co. v. Meyers, 22 C. C. A. 268, 76 Fed. 443. That the words, "he is a dangerous man," are not actionable in themselves is clear. The nearest approach to a recognition of the doctrine of privilege was in the instruction that the defendant was not prevented, by the legal presumption of malice, from showing that the words were not spoken maliciously; but this itself involves error. The words having been spoken under privileged circumstances, the presumption was that they were spoken without malice.

On a quotation from Odgers on Libel and Slander (page 173) it is contended that only necessary communications can be privileged, and that, unless "compelled to employ the very words complained of," the plaintiff in error was not at liberty to utter them. A privilege so restricted would not be a privilege. The case is not supposable in which words different from those used might not have been employed. It is a question of good faith on the part of the speaker. If the words used appear under the circumstances to have been needlessly harsh, or extravagant, or improbable, the jury for that reason may infer bad faith or malice, but it is not for the court to withhold or withdraw the question from the jury, when,

Digitized by Google

on the situation as it was, the words, if uttered in good faith, were privileged. The judgment is reversed, and the cause remanded, with direction to grant a new trial.

(78 Fed. 472.)

GARRETT et al. v. T. H. GARRETT & CO.

(Circuit Court of Appeals, Sixth Circuit. December 8, 1896.)

No. 458.

1. TRADE-MARKS—IMITATION OF LABELS—INJUNCTION.
   The use by a manufacturer of imitative labels and devices, in connection with an inferior article, which is sold to retailers at a reduced price, with the purpose and result of enabling them to sell it to consumers as the goods of another, will be enjoined.[1]
2. SAME—USE OF NAME.
   Where a firm has for many years used the name of its predecessors in connection with its goods, and has built up an extensive trade thereunder, such name, even if it could not be used as a trade-mark, is to be treated as a descriptive term, to the benefit of which they are entitled.
3. SAME—IMITATIVE LABELS—WHITE PAPER.
   While it is true, in the abstract, that every one has a right to use white paper, yet no one has a right to use it in such a way as to imitate another's labels, and thereby appropriate the good will of his business.
4. SAME—USE OF CORPORATE NAME.
   Where a corporation organized to manufacture and sell snuff had assumed the name of an employé holding a few shares of its stock, with the evident purpose of appropriating the trade of others of the same name, who had long used the name in connection with their snuff, *held*, that such corporation would be enjoined from using the name as part of its corporate name, or in its business.[2]

Appeal from the Circuit Court of the United States for the District of Kentucky.

This was a suit in equity by George B. Wilson, Henry D. Moore, and John O. Gilmore, partners doing business under the firm name of W. E. Garrett & Sons, against T. H. Garrett & Co., a corporation, to restrain the alleged wrongful use of a trade name or mark and of imitative labels. The cause was heard below upon a motion for preliminary injunction, and, the court having granted an injunction in respect to the labels, but refused it in respect to the name, the complainants have appealed.

Upton W. Muir, for appellants.

Augustus E. Wilson and Shackelford Miller, for appellee.

Before TAFT and LURTON, Circuit Judges, and SAGE, District Judge.

SAGE, District Judge. The appellants are manufacturers of snuff known to the trade as "Garrett's Snuff," and were complainants in

[1] As to the use of imitative labels, etc., see note on "Unfair Competition in Trade," attached to Scheuer v. Miller, 20 C. C. A. 165.

[2] As to the right to use of corporate names as trade-marks, see note to R. W. Rogers Co. v. Wm. Rogers Manuf'g Co., 17 C. C. A. 579, subdivisions 23–26.

Digitized by Google

a suit brought in the United States circuit court for the district of Kentucky to restrain the appellee from using certain labels upon cans and packages of snuff, and from using the name "Garrett" on such packages and cans, and from representing the same as "Garrett's Snuff." The case came before the court upon a motion by complainants for a preliminary injunction against the defendant, according to the prayer of the original and amended bills. The motion came on to be heard upon said bills, upon exhibits of cans and packages and labels used by the defendant in preparing and putting on sale its product and manufacture, and upon affidavits in support of the averments of the bills. The defendant resisted the motion upon its answer, and upon affidavits and exhibits.

The defendant company was incorporated February 23, 1895, with the capital stock of $2,000, in 20 shares, of the par value of $100 each, of which 5 shares were subscribed by each of the four incorporators, of whom T. H. Garrett was one. On the 12th of December, 1895, the articles of incorporation were amended by increasing the capital stock to $35,000, divided into 350 shares, each of the par value of $100. T. H. Garrett subscribed for 2½ shares. There were several other subscribers each for a small number of shares. J. B. Holloway was a subscriber for 127½ shares, Henry Laub for 5 shares, E. R. Burley for 50 shares, and Hannah Laub for 121½ shares. T. H. Garrett, in his affidavit, states that the means for the increase of the capital stock to $35,000 were furnished by Holloway, Lamb, and Burley.

The court granted the motion in part, upon the finding that the labels and devices used by the defendant company prior to its reorganization, exhibits of which were filed with complainants' bill, so resembled the labels and devices used by complainants as to be likely to deceive and mislead an ordinary and unsuspecting customer. The defendant company was therefore enjoined to that extent, although it appeared, as the court recognized, that it had ceased the use of the labels and devices referred to before the filing of the bill, and had endeavored to recall all the snuff which had been theretofore put upon the market, which, however, was claimed to be only a few hundred dollars worth. The court in its opinion said:

"The principal question on this motion is whether the complainants, as manufacturers of Scotch snuff, are entitled to the exclusive use of the word 'Garrett' on labels and other devices for advertising their Scotch snuff. This is so important and so doubtful a question that the court is unwilling to decide it upon mere affidavits, and upon a motion for a preliminary injunction."

Complainants appeal from this ruling.

The labels and devices used by the defendant company under its original organization were, in their general design and appearance, close imitations of complainants' labels and designs. The cans, packages, labels, and wrappers of complainants were almost literally copied by the defendant company, excepting that "T. H. Garrett, Louisville, Ky.," was substituted for "W. E. Garrett, Philadelphia." The color of defendant's labels was the same as that of complainants'. The type used for the printed matter on the

Digitized by Google

labels was similar in general appearance, arrangement, and general effect. That there was any intent to appropriate the good will or to deceive complainants' customers is stoutly denied by T. H. Garrett, and by the officers of the defendant corporation, and it is declared in their affidavits that the retail dealers, who were customers of, and those who were solicited by, the defendant company, were advised that the snuff was the manufacture of T. H. Garrett & Co. and not the manufacture of William E. Garrett & Sons. Whether retail dealers were advised that they could sell the snuff as "Garrett's Snuff" to their customers as and for the snuff manufactured and sold by complainants, and whether it was intended that those customers should be thus deceived is in dispute. Affidavits for complainants sustain the charge, and affidavits for the defendant deny it. But that the effect was to impose snuff manufactured by the defendants upon purchasers from retailers as "Garrett's Snuff,"—that is to say, as snuff manufactured by complainants,—is, we think, too well established to be doubted; and we are fully impressed that it was the intention of the defendant company, by the use of the name "Garrett," to appropriate the good will and interfere with the trade of the complainants.

It is denied by the defendant company that the change of labels, which was made about the time of the reorganization, was because of any apprehension of trouble with complainants, or of any feeling on the part of the officers of the company that there was the least infringement of the rights of the complainants. The defendant's version, as gathered from the affidavits of Garrett and Laub, the president of the reorganized company, and of Holloway, one of the largest stockholders, is that the snuff sent out under the original labels was of inferior quality, that they were satisfied that it "would injure the business," that they "had heard that it was not good," and that the change in labels and devices was made, "not because of the resemblance to those of complainants, but because affiants and their associates were dissatisfied with the quality of the snuff."

T. H. Garrett, in his affidavit, says that, when the company was reorganized, Holloway brought up the question whether their brands and labels could not be mistaken for those of complainants or others, and that counsel were consulted on the subject, and that they advised certain changes, "out of abundant caution," which were made. He affirms that these measures were taken "to prevent confusion in the labels before there was any intimation of any dissatisfaction, or complaint on the part of complainants or anybody else." He also refers to and quotes from a circular put out by defendant company, December 31, 1895, in which the hope is expressed "that no one who tries our snuff will take it for theirs; that we should hate to have any one who has used our snuff, use theirs afterwards, under the impression that it was ours, because it would hurt his opinion of our goods; and that we trust that everybody who tries our snuff will notice and remember that it is made by us, and not by them." If all this be true, why did defendant company, upon reorganization, cling to the name "T. H.

Digitized by Google

Garrett & Co."? If that name had been attached to goods of inferior quality, why, in the reorganization, was it not dropped, and another substituted which would have relieved the company from the odium resulting, as they now claim, from the inferior quality of the snuff sold under that name? T. H. Garrett was the owner of only 2½ shares of the capital stock, the entire number of shares being 350. He was not made an officer of the new company, and had only a subordinate position as an employé. There was no apparent reason why his name should be adopted as the corporate name, unless it was that "Garrett's Snuff" had a reputation, and was in demand by the users of snuff all over the South,—the territory sought to be occupied by the defendant company.

The statement, made by Holloway in his affidavit, that the only reason for retaining the name of T. H. Garrett in the name of the corporation was that he was its original projector and promoter, and that it would have been an unnecessary and unfair reflection on him to have changed the name, is mere pretense and sham, too bald to be even plausible. If it be said that it was to preserve the good will of the company as first organized, the answer is that by Garrett's own affidavit it is shown that, by reason of the poor quality of the snuff put on the market by that company, its good will, if it ever had any, was all turned to ill will. Taking his own showing, it is apparent that the best thing for the company to do, if it was actuated by any honest purpose, would have been to get rid of the name as quickly as possible. The sending out of circulars and advertising matter, which might be suggested as another reason, was, almost exclusively, after the reorganization. If the defendant company was and is, as it claims, solicitous to avoid confusion of labels, and desirous to build up a good will of its own, which it would be able to protect against the complainants as well as all others, it ought to hail with satisfaction anything that the court below could have done, or that this court can do for it, in that behalf.

It is quite significant, with reference to the denials of intent to imitate complainants' labels or devices which are made by all the defendant's affiants who have anything to say on that subject, that the imitations were invariably of complainants' labels and devices, and never of any one of the several other manufacturers whose names are mentioned. It is not to be credited that the imitations were unintentional or accidental. It is not claimed that the packages of snuff on which they were placed were put on the market with the intent to deceive the retail dealers who were supplied by defendant. That would have been impracticable. The claim is that the snuff was of inferior quality, and sold at prices below complainants' prices, with the expectation that the retail dealers, who knew what they were buying, would sell it to their customers as "Garrett's Snuff," and at the price of the genuine article, thereby reaping a larger profit. That was the lure, and it was of the sort to be successful in the great majority of instances. As for the purchasers from the retailers, they were mostly "snuff rubbers,"—that is to say, those who use snuff for "rub-

Digitized by Google

bing," as it is termed, which is a substitute for chewing,—and, being generally of the lower classes, they would not be likely to discover that they were cheated by fraudulent labels and an inferior article. But the injury to complainants was and is twofold, for they not only lose trade, but reputation, or good will, also.

It is noticeable, also, that T. H. Garrett completely impeaches his own testimony by his own affidavit in two very important particulars. He affirms that he had for several years given great attention to the subject of the manufacture of snuff, and that he was experienced in that manufacture. In another part of the same affidavit he affirms that the snuff manufactured before the defendant company was organized—and that was when the manufacture was under his supervision—was so inferior in quality that the defendant took back and withdrew from sale every package that could be found or got hold of anywhere, being not less than one-half the total amount that had been sold. Then, again, he affirms that the change of labels and devices by defendant, before this suit was brought, was made, not because of their resemblance to those of the complainants, but because affiant and his associates were dissatisfied with the quality of the snuff. In another part of the affidavit he affirms that the question with reference to the changing of the brands and labels was whether they could be mistaken for those of complainants, or those of any of the several manufacturers named; and counsel were consulted, and changes made on their suggestion. Such conflicts of statement are not badges of truth or sincerity.

Without entering further into detail, it is enough to say that we are convinced, by the admitted facts and the facts appearing in the affidavits offered on behalf of the defendant, that the charge, made in the bill, of an attempt to take advantage of the complainants and interfere with the good will of their business by the use of the name "Garrett," is abundantly sustained. The district judge in effect decided that defendant was trespassing on complainants' good will, by directing that the injunction which he allowed should issue. That injunction, however, fell far short of affording substantial relief or protection to complainants. It related only to labels and devices which he found had been abandoned by the defendant. The only additional feature covered by the injunction was the ground color of defendant's labels. The defendant was enjoined from using either a white color or a murky white color. But these were matters of detail, and of minor importance, as compared with the use of the name "Garrett." Without the use of that name the fraudulent scheme of the defendant would never have materialized. The court, while recognizing that the defendant was guilty of the fraud charged, declined to make the injunction effectual against it, and applied it only to what was really a matter incidental to the use of the name. The rule of this court not to disturb the action of the court below, unless the discretion of the judge was improvidently exercised, was recognized by the circuit court of appeals of this circuit in Duplex Printing-Press Co. v. Campbell Printing-Press & Manuf'g Co., 16 C. C. A. 220,

Digitized by Google

69 Fed. 252. The granting and withholding of a preliminary injunction is largely within the discretion of the judge who passes upon the application for it, and there are many considerations which may be even controlling without reference to the merits of the question at issue. But here the judge gave specifically his reason, which related, not to a matter of mere discretion, but directly to the merits of the question involved, which was whether the complainants were entitled to the exclusive use of the word "Garrett" on the labels and other devices for advertising their Scotch snuff. This, he held, was so important and so doubtful a question as not to be decided upon mere affidavits, and upon a motion for a preliminary injunction. That the complainants were entitled to the use of the word "Garrett," on their labels, as a trade-mark or as a descriptive word, is, in our opinion, beyond question, upon the undisputed facts of the case. They and their predecessors had enjoyed such use for many years and had built up an extensive trade based upon it. Even if it could not be used as a trade-mark, it is to be treated as a descriptive term, to the benefit of which they are entitled. It was so held by the court of appeals of this circuit in California Fig Syrup Co. v. Frederick Stearns & Co., 20 C. C. A. 22, 73 Fed. 812, and in Salt Co. v. Burnap, also decided by the court of appeals of the Sixth circuit, and reported 20 C. C. A. 27, 73 Fed. 818.

It was contended for the defendant, upon the hearing, that every man has a right to the use of his own name in business, and, as to the order of injunction below restraining defendant from using white paper for its labels, that every person has a constitutional right to use white paper. These propositions, in the abstract, are undeniably true, but counsel for the time overlooked the fact that, wherever there is an organic law, wherever a constitution is to be found as the basis of the rights of the people, and as the foundation and limit of the legislation and jurisprudence of a government, there the mutual rights of individuals are held in highest regard, and are most jealously protected. Always, in law, a greater right is closely related to a greater obligation. While it is true that every man has a right to use his own name in his own business, it is also true that he has no right to use it for the purpose of stealing the good will of his neighbor's business, nor to commit a fraud upon his neighbor, nor a trespass upon his neighbor's rights or property; and, while it is true that every man has a right to use white paper, it is also true that he has no right to use it for making counterfeit money, nor to commit a forgery. It might as well be set up, in defense of a highwayman, that, because the constitution secures to every man the right to bear arms, he had a constitutional right to rob his victim at the muzzle of a rifle or revolver. It has been held, with reference to trade-marks, that a man has not the right to use even his own name so as to deceive the public, and make them believe that he is selling the goods of another of the same name. Holloway v. Holloway, 13 Beav. 209. In William Rogers Manuf'g Co. v. Rogers & Spurr Manuf'g Co., 11 Fed. 495, it was held that, while "any one has a right to the

Digitized by Google

use of his own name in business, he may be restrained from its use if he uses it in such a way as to appropriate the good will of a business already established by others of that name; nor can he, by the use of his own name, appropriate the reputation of another by fraud, either actual or constructive." The same ruling was made in Rogers Co. v. Wm. Rogers Manuf'g Co., by the court of appeals of the Second circuit, as reported in 17 C. C. A. 576, 70 Fed. 1017. In these last two cases the name was used as a part of the name of a corporation. In the last case the court cites Manufacturing Co. v. Simpson, 54 Conn. 527, 9 Atl. 395, and Rogers v. Rogers, 53 Conn. 121, 1 Atl. 807, and 5 Atl. 675, where a large number of reported cases upon this portion of the law of trademarks is collected. See, also, Landreth v. Landreth, 22 Fed. 41, where the court held that, "while a party cannot be enjoined from honestly using his own name in advertising his goods and putting them on the market, where another person, bearing the same surname, has previously used the name in connection with his goods in such manner and for such length of time as to make it a guaranty that the goods bearing the name emanate from him, he will be protected against the use of that name, even by a person bearing the same name, in such form as to constitute a false representation of the origin of the goods, and thereby inducing purchasers to believe that they are purchasing the goods of such other person."

It is to be noted that, in Landreth v. Landreth, and in Holloway v. Holloway, the defendant was restrained from the fraudulent use of the name by a preliminary injunction, and it will appear, upon investigation, that in a large number of cases upon this subject a preliminary injunction was allowed. In such a case as this, where the manifest intent was and is to appropriate the good will of the complainants by the fraudulent use of the name "Garrett," if the complainants be not protected by preliminary injunction against such use,—if, in other words, that question be postponed to the final hearing,—there is every inducement to the defendant to delay and prolong the litigation, continuing, meanwhile, the assaults upon the good will of the complainants, so that, even if final decree be at last rendered in favor of complainants, the good will will have been so seriously and irreparably injured, if not in great measure destroyed, as to leave the complainants practically without remedy. It is, therefore, peculiarly a case in which, if the court is satisfied that the use of the name is fraudulent, as this court is satisfied in this case, an injunction should at once be issued.

Entertaining these views the order of the judge below for an injunction as to the use of the labels will be affirmed, and the order refusing an injunction against the use of the name of "T. H. Garrett," or "T. H. Garrett & Co.," will be reversed, with costs. The cause will be remanded, with instructions to continue the injunction granted, and to grant an injunction, in accordance with this opinion, against the use of the name of the defendant "T. H. Garrett," or of the name "Garrett," as a part of the corporate name of the defendant, or in its business.

Digitized by Google

(78 Fed. 491.)

THOMASSON v. BUMPASS et al.

(Circuit Court of Appeals, Fourth Circuit. February 2, 1897.)

No. 182.

PATENTS—INFRINGEMENT—POULTRY CRATES.

The Thomasson patent, No. 444,561, for an improved poultry crate for shipping live poultry, construed, and *held* not infringed. 74 Fed. 243, affirmed.

Appeal from the Circuit Court of the United States for the Eastern District of Virginia.

This is a bill in equity, in usual form, by Robert G. Thomasson, appellant, against Charles W. Bumpass and William McCandlish, appellees, praying an injunction and other relief for the infringement of appellant's patent, No. 444,561, dated January 13, 1891, for an improved poultry crate to be used in shipping live poultry. The defenses principally relied upon by the appellees are noninfringement and want of patentable invention. The court below (Judge Hughes), upon final hearing, held that the crate made by the appellees did not have the wicker bottom of the appellant's patent, and did not infringe. 74 Fed. 243. The complainant appealed.

F. W. Sims and John G. May, for appellant.
B. B. Munford, for appellees.

Before SIMONTON, Circuit Judge, and MORRIS and BRAWLEY, District Judges.

MORRIS, District Judge. The appellant, in the specification of his patent, states that his invention consists in the novel construction and combination of the parts of a poultry coop for shipping purposes, which, he states, combines strength and durability, and is easily and cheaply made. He gives a minute description of the details of the construction, nearly all the elements of which are obviously old, but he does not indicate what it is that he has invented or considers new, otherwise than by his two specific claims. In his testimony, in describing what it was that he invented, he does state that it was new, and resulted in a great saving of time and material, to adopt his method of weaving the splits in the wicker bottom, using broader and stouter splits, as contrasted with the old wicker bottoms, woven as a basket is, and also he claims, in his testimony, that it was new to put on the wire netting in the manner in which he did; but neither of these things is pointed out in his specifications, nor in his claims. A patent grants no exclusive right except to what is distinctly covered by the claims. Grant v. Walter, 148 U. S. 547, 13 Sup. Ct. 699; Western Electric Manuf'g Co. v. Ansonia Brass & Copper Co., 114 U. S. 447, 5 Sup. Ct. 941; Ashton Valve Co. v. Coale Muffler & Safety-Valve Co., 3 C. C. A. 98, 52 Fed. 318; McClain v. Ortmayer, 141 U. S. 419, 12 Sup. Ct. 76.

The first claim of the patent is as follows:

"(1) The chicken coop, or crate, comprising the bottom, having the side and end projecting portions forming the normally upturned portions, or sides and ends, of the coop, connected together by the short tucked-in corner pieces or strips, and the inner and outer opposite strips, or pieces, lapping and secured to the top

Digitized by Google

edge strips of the sides, and suitably reinforced thereat, substantially as and for the purpose set forth."

It is obvious, from the proof and the exhibits, that the appellee does not infringe this claim. He uses a wicker bottom, which, perhaps, is woven and fastened together in a manner similar to that used by the appellant, but he does not use a bottom having the sides and ends upturned and connected together by strips secured to the top edge strips of the sides. He uses a flat wicker bottom, without sides or ends, and for the sides and ends of the coop bottom he uses boards nailed to the bottom, and made secure by long pieces of hoop iron nailed across the bottom, and turned up and fastened on the sides.

The second claim of the patent is as follows:

"(2) The chicken coop, consisting of the bottom wickerwork portion, having side and end portions held together as described, and having upper and lower bottom reinforcing pieces or strips, also reinforcing metallic pieces or strips near their corner edges, the wire netting covered bows with their braces or stays, said bows being secured to the said bottom portion, the upright stays or braces secured to said bottom portion, and the end bows and the reinforcing metal pieces secured to said upright stays and to said bottom portion, and to the central top brace of said bows and the central underneath strip or brace of said bottom portion, substantially as set forth."

If this claim is for the appellant's wicker bottom, with its sides and ends made as described in the first claim, in combination with the other parts of the chicken coop, it may, possibly, be sustainable; but, as appellees do not use appellant's special wicker bottom with the sides and ends, they do not infringe the combination. If, however, it be contended that this claim covers any equivalent for appellant's wicker bottom, then, we think, it is manifestly invalid. Discarding appellant's peculiar bottom, with its sides and ends, and substituting any well-known tray made of boards or tin or other material, there is nothing left that is patentable. It is a cage made by erecting on the tray a rectangular frame, made of four bent bows of wood, stayed by three wood crosspieces, strengthened by hoop iron where additional strength is needed, and the whole covered with wire netting. There is no novelty in any means used or result obtained. Every element is old in itself, and has been used in coops and cages.

It is testified that appellant's coop, by reason of its rectangular shape, is more convenient for railroad transportation than the old dome-shaped chicken coop; but to adopt that form did not require invention, and it is not suggested in the specification as new. It is said that appellant's coop, by reason of its being stayed by hoop iron or metallic pieces, better withstands transportation; but that is mere improvement in manufacture. The only feature which is not obviously mere mechanical improvement in the construction of what was well known in making crates, coops, and cages is appellant's method of weaving the wicker bottoms, and forming the sides and ends by bending up the bottom strips and securing them; and, as the appellees do not use this feature, there is no infringement. The court below so held, and its decree is affirmed.

Digitized by Google

(78 Fed. 497.)

BRAMBLE et al. v. CULMER et al.

(Circuit Court of Appeals, Fourth Circuit. February 2, 1897.)

No. 186.

1. PILOTS—OWNERS AND CHARTERERS—RESPONSIBILITY FOR NEGLIGENCE, ETC.
A pilot is so far the agent of the vessel that whoever is responsible for her navigation is responsible for his acts or omissions in the line of his duty; and unless there is some express contract, or some facts warranting implications or understandings contrary to uniform usage, the pilot must be considered the servant of the owner.

2. SHIPPING—CHARTERS—DEMISE OF VESSEL.
When, by a charter, the shipowner undertakes to act as a carrier of goods, and appoints the master and crew, the responsibility for her safe navigation rests on him; but when the ship is completely transferred for a period of time, and the owner has nothing to do with the appointment of officers and crew, then the charterer becomes responsible for her navigation.

3. SAME—FURNISHING PILOT.
When the charterers are to pay a lump sum to the owners, and defray port and pilotage charges, and the owners select and pay the master and crew, the mere fact that the charterers, at a port where no compulsory pilotage laws are in force, furnish a pilot, whose services are accepted by the master, does not make them responsible for the loss of the vessel through his incompetence or negligence.

Appeal from the District Court of the United States for the District of Maryland.

This was a libel in personam by Barzillia Bramble and Henry W. Elliott, owners of the schooner William Farren, and Calvin A. Murphy, her master, against James W. Culmer and Thomas B. Schall, to recover for the loss of said schooner, while under charter to the defendants. The district court dismissed the libel on the merits, and the libelants have appealed.

Beverly W. Mister, for appellants.

Robert H. Smith, for appellees.

Before GOFF and SIMONTON, Circuit Judges, and BRAWLEY, District Judge.

BRAWLEY, District Judge. The primary and fundamental question in this case upon which the decision turns is whether, under the agreement between the parties, there was a demise of the ship, or whether it was a contract of affreightment. If the owners parted with the whole possession and control of the ship, and gave to the charterers power and right to do what they pleased with regard to the captain and crew and the management of the ship, such charterers would become pro hac vice the owners, and would be responsible for its navigation and all the incidents flowing from that relation. If, on the other hand, the agreement between the parties was nothing more than a contract whereby the owners agreed for a fixed sum to send their ship for a cargo to be obtained at such points as the charterers might direct for transportation to its port of destination, and did nothing more to divest themselves of its ownership and control,

Digitized by Google

then the responsibility for its proper navigation rests upon them, and they cannot hold the charterers to account.

The proper determination of the precise relations of the parties is not free from difficulty, owing to the informal nature of the agreement, there being no written charter party. The contract was indefinite and verbal, and, so far as we can gather from the testimony, the facts were substantially these: The owners of the William Farren, a small schooner, habitually employed in and about the Chesapeake Bay, some time in the spring of 1894, applied to one Schall, in Baltimore, for a charter. Schall was engaged in the shipping of pineapples on joint account with one Culmer, who lived on Eleuthera Island, one of the Bahamas, and was in the habit of sending out a number of vessels every spring, and once before had chartered the Farren for that purpose. Very little was said as to the terms of the charter, but it was understood that the owners were to receive the amount usually paid for schooners of like tonnage, and there is no dispute as to what that was. The owners were told to get ready, and after employing as mate one Fehring, who was somewhat familiar with the West Indies, though he had never before been in the waters where occurred the incidents hereafter related, the master reported to Schall, and, receiving from him a letter to Culmer, set sail, arriving without accident or incident at Tarpum Bay, in Eleuthera Island, where he delivered to Culmer the letter intrusted to him. It appears further from the testimony of Murphy, the master, that out of the gross sum to be paid by the charterers, the owners were to receive 40 per cent., and that the master was to receive 60 per cent., and "pay the expenses of the hands, wages, and grub bill." It further appears, though there is no testimony showing any positive agreement on the point at the time that the charter was made, that it was understood that all pilot and port charges incurred in the Bahamas were to be paid by the charterers. After reporting to Culmer, the master was informed that he was to get his cargo of pineapples at Great Harbor, on Long Island, about 180 miles distant, and, taking aboard a pilot, set sail for that point, and while on the way, while off Conception Island, was run upon a reef, and the schooner became a total loss. It is for the loss of the vessel, caused, as alleged, by the incompetency of the pilot, that the libel is filed by the owners against Schall and Culmer, the charterers, the allegation being that the pilot was their agent; that "the reef was plainly indicated on charts for that part of the Atlantic Ocean"; and that loss of the vessel was solely due to the incompetency, unfitness, and ignorance of the pilot furnished by the charterers.

There are no licensed pilots at Tarpum Bay or in the waters thereabout, and no laws of compulsory pilotage, and the testimony relating to the taking of the pilot is brief. Murphy, the master, relates that, on the night after his arrival at Tarpum Bay, he was at Culmer's house, and, after some desultory conversation with him, he called out to a man he did not see in the dark, saying: "Peter, I want you to take the Farren to Great Harbor. You will sail Saturday morning." Culmer relates that Murphy asked "if I intended sending a pilot with him," and that he told him he

Digitized by Google

would send Peter Allen, and it appears that he was to pay Peter Allen for this service. Peter Allen was a colored man, about 54 years of age, living on Eleuthera Island, who seems to have been engaged sometimes as a seaman in command of small vessels, sometimes as a pilot, and sometimes in cultivating pineapples on shares for Culmer and others. He was not a licensed pilot. He could read a little, but could not write. A great deal of testimony was offered to show his competency as a pilot, and it sufficiently established the fact that he had acted successfully as a pilot in conducting vessels safely through the waters where this untimely mishap befell. The testimony further shows that no great skill was needed at the point where the vessel went on the reef, and that any capable navigator could have sailed her safely there, special skill and local knowledge being required only at and about the entrance to the harbors. In the view we take of this case, it is not necessary that we should determine critically the competency of Peter Allen as a pilot. We are satisfied that he was believed to be competent; that he had frequently been employed in such undertakings, and that he was one of the most competent men available for such service in those islands; that Culmer had frequently intrusted him with the management of his own vessels; and that his previous success left him no room to doubt that he had the skill and knowledge required to pilot the vessel safely from Tarpum Bay to Great Harbor.

Nor is it necessary to consider in detail the circumstances attending the wrecking of the vessel. Whether it was solely due to the carelessness and ignorance of the pilot, which the preponderance of evidence tends to establish, or whether the master and mate contributed to bring it about by their refusal to keep the vessel on the course given to them by the pilot, as his unsupported testimony declares to have been the case, is not material to the determination of the main question, which is this: Was it the duty of the owners or of the charterers to navigate the vessel? If it was the duty of the owners, the taking of the pilot was optional with them, and there being no law of compulsory pilotage in those waters, and the employment of the pilot being their voluntary act, and subsidiary and subservient to their use, they could not relieve themselves of responsibility by turning over the entire control of the vessel to him; and, by so much as he was ignorant and unacquainted with charts and the higher arts of navigation, to that degree did an increased duty of vigilance and care devolve upon the master and mate, who were in possession of charts, which, as their libel states, plainly indicated the reef upon which the vessel was wrecked. In any view of the case, the pilot would be considered as so far the agent of the vessel that whoever is responsible for its navigation would be responsible for his acts or omissions in the line of that duty; and, unless there is some express contract or some proof of facts which warrant implications or understandings at variance with uniform usage, the pilot must be held to be the servant of the owners.

It is the general and unvarying incident of all charter parties

Digitized by Google

that the owners of vessels are charged with the duty of navigating them, and parties must, in reason, be understood to contract with reference to such obligation, unless it is excluded by special contract or necessary implication. It is not contended here that there was any express contract at the time the vessel was chartered in which the charterers undertook to navigate the vessel. The master, mate, and crew were selected by the owners, and paid by them. The charterers undertook to pay a lump sum for the voyage, which sum was divided between the owners and the crew in the proportion before stated. This was but an ordinary contract of affreightment, and, if the schooner had been lost on the way out to Tarpum Bay, there could have been no pretense that the charterers were liable. Did anything occur at Tarpum Bay to alter the original contract? If so, by whom was it done, and by whose authority? The owners were not there. It is not necessary to consider that class of cases where the master, away from the home port, has authority to make contracts binding the ship, as they have no relevancy. The reporting to Culmer at that place, and the sending of the vessel to Great Harbor for her cargo, was in accordance with the original agreement; and the taking of a pilot was incident and subservient to the purpose of the voyage, and did not change the relation of the parties; nor is the fact that the pilot was to be paid by the charterers inconsistent with the original agreement, for there was an understanding from the beginning that all pilotage and port charges were to be paid by them. The services of the pilot were for the benefit of the owners, to enable them to make the voyage by which they were to earn the charter money. They could have taken him or not, as they chose. In taking him, he became their servant. It is their misfortune that he proved incompetent. There was nothing in the act of taking the pilot which so far changed the relation of parties as to convert a contract of affreightment into a demise or letting of the ship. A short review of the cases will make plain the distinction between these two classes of contracts.

When a shipowner agrees to carry goods by water, or to furnish a ship for the purpose of carrying goods in return for a sum of money to be paid to him, such contract is called a "contract of affreightment." The charterer thereby acquires the right to the temporary use of the vessel for the carriage of his goods, but the control and possession of the vessel remain in the owner, through the master and crew, who continue to be his servants. When a ship is let to another for a period of time, and the owner during that time has nothing whatever to do with the appointment of her officers and crew, or with the working or management of her, that is called a "demise" or "letting" of the ship. Scrutton, Charter Parties, pp. 1, 3; Carv. Carr. by Sea, p. 118 et seq.

Lord Esher, in Baumvoll v. Gilchrest (decided in 1891) [1892] 1 Q. B. 258, thus discusses the question:

"When is the captain the owner's captain? He is the owner's captain if the owner appoints him, and exercises authority over him, or has a right as between themselves to exercise that authority over him which an owner has ordinarily to

Digitized by Google

exercise over his captain. * * * It seems to me, after listening to all the cases that have been cited, from the time of Lord Ellenborough downward, that through all the cases it has been assumed that the question depends, where other things are not in the way, upon this: Whether the owner has by charter, where there is a charter, parted with the whole possession and control of the ship, and to this extent, that he has given to the charterer a power and right independent of him, and without reference to him, to do what he pleases with regard to the captain, the crew, and the management and employment of the ship. That has been called a 'letting' or 'demise' of the ship. The right expression is that it is a parting with the whole possession and control of the ship, and in such case the captain is not the captain of the owner."

In this case, affirmed by the house of lords ([1893] 1 App. Cas. 8), the owners of the ship chartered her for four months to the charterers, who concurrently agreed to purchase her on certain terms at the expiration of the charter party. The charterers appointed and paid the wages of the captain and crew. The action was for damages for the loss of cotton upon bills of lading signed by the captain, caused by the alleged unseaworthiness of the ship. It was held that the captain was not the captain of the owners, and that they were therefore not responsible, having parted, under the terms of the charter party, with the possession and control of the vessel.

In Master of Trinity House v. Clark, 4 Maule & S. 288, when the vessel was chartered to the government for transport purposes at a certain rate per registered tonnage for each calendar month during the service, although the master and crew were paid by the owners, it was held by Lord Ellenborough that such possession by the owners was consistent with the entire ownership and possession of the vessel on the part of the crown, to enable it fully and beneficially to enjoy the same, the services of those best qualified to navigate it under the direction of the crown being hired together with the vessel itself. Stress was laid upon the object to be served, and upon the terms of the charter party, which were held to be proper words of lease. It was therefore decided that the effect of the charter party was to transfer possession of the vessel to the crown during the term of service, and that the owners were not liable for certain light dues. This case, decided in 1815, has been so much distinguished and doubted since that it cannot be considered of much authority.

Meiklereid v. West, 1 Q. B. Div. 428, was held to be clearly a demise of the ship. In that case the ship was to be under the direction of the charterers to be employed within certain limits as ordered by them, for three or more calendar months, at their option; the charterers to pay for coals and all wages and expenses of the crew, and to deliver up the ship to the owners at the termination of the charter in as good order and condition as when delivered.

These are the leading English cases on the demise or hiring of ships.

In U. S. v. Shea, 152 U. S. 178, 14 Sup. Ct. 519, the owners of the steamer Bowen agreed with the deputy quarter master general of the United States to furnish a vessel for a specified service in the harbor of New York, to provide an engineer and fireman,

Digitized by Google

the remainder of the crew to be supplied by the United States, which also was to furnish fuel. The government was to pay $67 per diem for the use of the vessel, and the same was to be under its control and management. The Bowen, while so employed, was injured in a collision in New York harbor, and the claim was for reimbursement of expenses incurred. It was held that the contract was one of hiring, and not for service, and that the government, during its possession of the vessel, was a special owner. The court cites Reed v. U. S., 11 Wall. 591, where Justice Clifford uses this language:

"But where the general owner retains the possession, command, and navigation of the ship, and contracts for a specified voyage, as, per example, to carry a cargo from one port to another, the arrangement, in contemplation of law, is a mere affreightment, sounding in contract, and not a demise of the vessel, and the charterer or freighter is not clothed with the character or legal responsibility of ownership."

And in Leary v. U. S., 14 Wall. 607, Justice Field, speaking for the court, says:

"All the cases agree that the entire command and possession of the vessel, and consequent control over its navigation, must be surrendered to the charterer before he can be held as special owner for the voyage or other service mentioned. The retention by the general owner of such command, possession, and control is incompatible with the existence at the same time of such special ownership in the charterer."

The older cases of Hooe v. Groverman, 1 Cranch, 214, and Marcardier v. Insurance Co., 8 Cranch, 39, are to the same effect.

In Iron Co. v. Huntley, 2 C. P. Div. 464, a steamer was let to the sole use of the charterers, and for their benefit, for the space of six months, with option to take her longer. Freight for the hire of steamer was to be £410 per month. The charterers were to have the whole reach of the vessel, and were to pay for coals, port charges, pilotage, and extra labor, but the owner was to pay the crew, and find all ships' stores and other necessaries. In the course of a voyage under this charter, the vessel was wrecked, owing to negligence of the master and crew; and the question was whether the owner was liable to the charterer for that negligence. It was held that he was, because, so far as concerned the navigation of the vessel, the owner had control for the purpose of carrying out his contract; that though the charterers might direct where the the vessel was to go, and with what she was to be laden, the owner remained in all respects accountable for the manner in which she might be navigated.

In Fenton v. Packet Co., 8 Adol. & E. 835, the steamer was chartered to one Dails for six months, at the rate of £20 per week, he to pay all disbursements, including pilotages, seamen's and captain's wages. For damages caused by a collision owing to the improper navigation of the vessel, it was held that the owners were responsible, they having the appointment and power of dismissal of the officers and crew, the possession and care of the vessel being thus left in their hands.

The result of all the cases seems to be this: Wherever the shipowner undertakes to act as carrier of goods, and appoints the

Digitized by Google

master and crew, the responsibility for her safe navigation rests upon him; but wherever the ship is completely transferred to the hirer for a period of time, and the shipowner has nothing whatever to do with the appointment of her officers and crew, then the charterer becomes responsible for her navigation. No case has been cited, and our researches have not disclosed any, where the mere appointment of a pilot has been held to operate so as to change legal ownership and responsibility. The pilot is considered as the servant or agent of the owner. The fact that he was selected and paid by the charterers cannot alter his relations to the ship.

Says the court in Bussy v. Donaldson, 4 Dall. 207:

"The mere right of choice, indeed, is one, but not the only, reason why the law in general makes the master liable for the acts of her servants: and, in many cases where the responsibility is allowed to exist, the servant may not, in fact, be the choice of the master."

Wherever the law of compulsory pilotage prevails, the master, in point of fact, does not choose his pilot; but that is never held in this country, at least, to absolve the vessel from responsibility for injury caused by the negligence of the pilot. It is different in England within certain districts, by reason of the statute of 17 & 18 Vict.

We do not find in Homer Ramsdell Transp. Co. v. Compagnie Generale Transatlantique, 63 Fed. 847 (a case much cited by the appellant), anything not in consonance with the views upon which our decision rests. The injury complained of in that case being to a pier, a part of the land, and it not being a marine tort, the question involved was the liability at common law. The maritime law as to the responsibility of the vessel, and as to the position and powers of the master, is not derived from the common law. It is founded upon usages and practices so remote that their origin cannot be traced. This places the liability for all injuries done, not primarily upon the owner, but upon the vessel itself. All that was actually decided in Ramsdell's Case was that the shipowner was not liable at common law for damages to a pier caused by the negligence of a pilot compulsorily employed. Ralli v. Troop, 157 U. S. 386, 15 Sup. Ct. 657.

Nor are we moved to a change in our views by the consideration of those cases cited by the appellants' counsel which hold that the navigation of the ship is under the exclusive control of the pilot. Whatever may be the rule in those jurisdictions wherein compulsory pilotage is in force, and where there is a body of intelligent, trained, and experienced pilots licensed by law, we are of the opinion that in this case, and with the pilot selected under the circumstances here disclosed, there was nothing to absolve the master from responsibility for the safe navigation of his vessel, and that he had the right and duty to displace him if any manifest incapacity was disclosed. The China, 7 Wall. 67; The Oregon, 158 U. S. 194, 15 Sup. Ct. 804.

This whole subject had thorough examination by Mr. Justice Grier in Smith v. The Creole, 2 Wall. Jr. 485, Fed. Cas. No. 13,033, who there states the law:

Digitized by Google

"The vessel, when under the control of a pilot, is in the legal possession of the owners. The pilot is their servant, acting in their employ, and receiving wages for services rendered to them. The fact that he was selected for them by persons more capable of judging of his qualifications cannot alter the relation which he bears to the owners. He is still their servant."

The decree of the district court is affirmed.

(78 Fed. 504.)

SPEDDEN et al. v. KOENIG et al.

(Circuit Court of Appeals, Fourth Circuit. February 2, 1897.)

No. 180.

SHIPPING—SUPPLIES—LIABILITY OF PART OWNERS.

In the home port, where all the owners reside, the managing owner, though registered as such at the customhouse, cannot, merely by virtue of that relation, order supplies, and bind his co-owners to a personal liability therefor; nor do they become liable merely because the creditor, on his books, charges the supplies against the vessel "and owners."

Appeal from the District Court of the United States for the District of Maryland.

This was a libel in admiralty by Robert M. Spedden and Harvey E. Birch, trading as Spedden & Birch, in personam, against George Koenig and Nicholas R. Ford, part owners of the steam tug May Russell, to recover for supplies furnished for her use. The circuit court dismissed the libel, and the libelants have appealed.

Robert H. Smith, for appellants.

Beverly W. Mister, for appellees.

Before GOFF and SIMONTON, Circuit Judges, and BRAWLEY, District Judge.

BRAWLEY, District Judge. The libelants, who were engaged in the business of machinists and steamship supplies in the city of Baltimore for some years prior to the date of the filing of this libel, furnished supplies to one Phillips, who built, owned, and managed several tugs, among them the May Russell, which was completed about August 1, 1893; and one-half interest in this tug was then sold to one Koenig, in pursuance of an agreement made with Phillips, that he would buy a half interest in one of the tugs which were then building. About the same time, one Ford loaned Phillips some money, taking a bill of sale of one-fourth of said tug as security. Phillips afterwards repaid Ford a part of the amount loaned, and in the autumn of 1895 Koenig's wife purchased this one-fourth interest, and took a bill of sale from Ford. The tug was enrolled, and papers issued to Phillips, as managing owner, in compliance with the Revised Statutes, requiring managing owners to give a bond of indemnity to the government against any frauds under the revenue laws. A part of the supplies (about one-fifth of the entire amount claimed) were furnished prior to August 1, 1893; the remainder between that date and the summer of 1895,

Digitized by Google

during which period Phillips, by an agreement between himself and Koenig, had the use, employment, and earnings of the tug for his own benefit. No profits were made, and Koenig and Ford received no part of the earnings. All of the parties were residents of Baltimore, and acquainted with each other. The supplies were furnished to Phillips, and charged on the books of the libelants to the "May Russell and owners." Phillips, during this period, was the owner and manager of other tugs, supplies for which were bought from the same parties. In making his settlement, it is in evidence that he at one time directed that a small amount of money paid in should be credited to the account of the May Russell; but, at the request of the libelants, he consented that it should be applied to other indebtedness. Phillips became embarrassed in the summer of 1895, and in the autumn of that year the May Russell passed into the possession of Koenig. There is no question of the liability of Phillips, and the court below has entered a decree against him; but it appears that he is insolvent, and it is clear that the supplies were such as were necessary for the use of the tug in the business for which she was built. The only point for decision is whether Koenig and Ford are liable. The district court has held that they were not. Hence this appeal. There is no proof that Koenig or Ford had any knowledge that Phillips was ordering these supplies from the appellants, or that he had any authority from them to buy them or to pledge their credit, or that the appellants ever consulted them, or made known the fact, or demanded any payment from them until after Phillips became insolvent.

It is well settled that, by the law of this country, no maritime lien is allowed for supplies furnished to a vessel in her home port; and it is conclusively presumed that they are furnished upon the owner's personal credit, and it is equally well settled that co-owners of ships are not partners. Their relation to each other is that of tenants in common, where each is severally liable upon his own contract. As between partners, the relation of principal and agent is implied by law; between part owners it must be proved,—the only modification of this rule being the implied authority of part owners on the spot to order for the common concern whatever may be necessary for the preservation or proper employment of the ship, the other owners being absent; but in the home port, where all the owners reside and are easily accessible, no such authority to bind the ship can be presumed. The presumption in such cases is that the supplies are furnished upon the personal responsibility of the owner. Whether the owner has authority to bind his co-owners for such supplies is a question of fact to be determined in each case by the circumstances. The fact that Phillips was registered in the customhouse as managing owner does not of itself imply authority by his co-owners to use their credit. Such registry, required by section 4320 of the Revised Statutes, is requisite to the licensing of vessels for the coasting trade or fisheries, and demands that the managing owner shall enter into bond, with sureties, to indemnify the government against the vessels being em-

Digitized by Google

ployed in any trade whereby the revenue of the government may be defrauded. It neither enlarges, diminishes, defines, nor affects the relations of the owners towards each other. It is required simply to enable the government to have some responsible person of whom it can require compliance with its revenue laws, and cannot be construed so as to create such managing owner a plenipotentiary of the other owners for purposes with which the government has no concern.

The function and authority of the "managing owner" being thus limited to the purposes and provisions of the statute, we must look elsewhere for his authority and rights towards his co-owners and persons dealing with him. "In respect to repairs and necessaries in the port or state to which the ship belongs," says Mr. Justice Story in The General Smith, 4 Wheat. 443, "the case is governed altogether by the municipal law of that state, and no lien is implied, unless it is recognized by that law."

The law of Maryland is settled by Pentz v. Clarke, 41 Md. 338:

"The later decisions hold that no implied authority arises from the relations of master and owner per se to bind the owner in the home port; but that, in order to bind such part owner, the master must have special authority for that purpose, or the owner must have held out the master as having such authority, or he must have ratified the contract after it was made."

In the purchase of supplies alleged to be necessary, the managing owner would have no greater authority than the master, as the principle which governs in such cases is the same.

Scull v. Raymond, 18 Fed. 547, was a libel in personam, wherein it was sought to hold a part owner of a steamer liable for damages caused by collision. In that case the steamer which was in fault was in the exclusive possession and control of other part owners. In deciding that Raymond was not liable in consequence of being a legal part owner, Judge Brown says:

"The primary relation of part owners of ships to each other is that of tenants in common of chattels. By the common law one tenant in common having possession of a chattel may use it for his own exclusive benefit, and, while so doing, he alone is liable for all charges affecting it. This rule as applied to ships has been so far modified as to entitle each part owner to receive his share of the earnings of the vessel, unless he has dissented from the voyage. Prima facie, therefore, the master or ship's husband, or the managing owner, is the agent of all the part owners in the ordinary business of the ship, and all will be prima facie liable for necessary repairs, supplies, and for torts of navigation, because, presumptively, the voyage is for the benefit of all. But this presumptive agency and benefit, and consequent liability, may be rebutted by any appropriate proof. And when it affirmatively appears that any one part owner was neither intended to be represented by the master in the navigation of the ship, or in ordering repairs or supplies, and that he never authorized the master to represent or bind him, and that he never ratified or adopted the voyage, but dissented from it, there is no reason or legal principle upon which he can be held for the supplies ordered or for the torts of the voyage. * * * If a part owner expressly dissent to repairs or supplies, he is not personally bound. The implied authority of the master to bind him is in such cases rebutted by proof of the dissent; and, if the material man had no previous dealings with the dissenting owner, the notice of dissent need not even be brought home to him."

After citing several cases in support of the view that owners are not personally bound for supplies unless they expressly authorize them or participate in the profits of the voyage, he says:

Digitized by Google

"These several classes of cases show one principle running through them all, namely, that the personal responsibility of a part owner does not necessarily attach as an incident to his naked legal ownership, but depends upon the possession, use, and control of the ship."

It does not appear that this case ever went to the supreme court.

Thorp v. Hammond, 12 Wall. 410, was decided by the same learned judge, and his decree, confirmed by the circuit court, was affirmed; the supreme court being equally divided. That also was a case of collision. The schooner at fault was commanded, sailed, and exclusively managed by Hammond, one of the owners, under an arrangement made between him and the other owners, whereby he had, in effect, become the charterer, retaining one-half the net freight after expenses were taken out, and paying to the general owners the other half. It was contended that all the general owners were liable for the torts committed by the schooner while she was thus let to charter. The court below was of opinion that they were not. The supreme court was equally divided on that question, but all held that the owner pro hac vice was liable.

Thomas v. Osborn, 19 How. 22, held that the power of a master or charterer or owner pro hac vice to create a lien upon the ship in a foreign port for repairs or supplies was limited to cases of necessity, and that it is the duty of the lender to see that the necessity exists, and that where the freight money was sufficient to pay for repairs and supplies, and might have been commanded for such use if it had not been diverted by the master, with the assistance of the parties making the advances, they had no lien. And that such power in the master or owner, pro hac vice, "does not exist in a place where the owner is present."

The St. Jago de Cuba, 9 Wheat. 416, holds that the necessities of commerce require that, when remote from the owner, the shipmaster should be able to subject the owner's property to liability for repairs and supplies, without which it is reasonable to suppose he will not be able to pursue his owner's interest, but, when the owner is present, the reason ceases.

We take the true rule, then, to be that in the home port, where the owners are resident and easily accessible, the master, or managing owner or charterer, or owner pro hac vice, cannot purchase supplies that will bind the ship or make the owners personally responsible without some authority, express or implied, and that such authority to the managing owner from the other owners cannot be implied from the mere fact that they are co-owners. "Title has nothing to do with these cases," says Lord Ellenborough in Annett v. Carstairs, 3 Camp. 354. "We must look to the contract between the parties."

In the case before us it is earnestly contended that all the owners are responsible for these supplies—First, because they were charged to the "tug May Russell and owners"; second, because Phillips was registered as the managing owner, and is to be presumed to have had authority to purchase on the credit of her owners such supplies as were necessary and proper for her use. In Beinecke v. The Secret, 3 Fed. 665, supplies were furnished to Murray, Ferris

Digitized by Google

& Co., charterers of The Secret, a foreign vessel, and the goods were charged on the books of libelant to "steamer Secret and owners." It was held that credit was given to Murray, Ferris & Co.; that libelants were put upon inquiry as to the interest of the charterers, and could easily have learned that Murray, Ferris & Co. had no right or power to bind the vessel or her owners for supplies, and had no lien upon the vessel. "A mere charge to the ship on libelant's books," says Judge Brown in The Francis, 21 Fed. 722, "is an inconclusive circumstance, even as regards the libelant's own intention. The usual practice of merchants to make such charges against the vessel indifferently, whether the vessel be in her home port or not, shows that such a charge is very slight, if any, evidence of an actual reliance on the ship. In practice, it is scarcely more than a habit adopted by merchants in order that their books may not tell against them, if, in fact, they would be entitled to hold the ship." As it is not claimed that Koenig or Ford had any knowledge of this entry, it must be regarded as a mere matter of bookkeeping, a self-preserving practice on the part of the creditor, or, at most, as evidence of a secret intention to hold them, which, not being communicated to them, can have no weight as evidence against them.

We have already considered the effect of the registry of Phillips as managing owner, and have determined that that fact alone cannot be looked to as defining the nature and extent of his powers. There is no magic in the term "managing owner," as used in circumstances like these, which would confer upon him powers and rights which otherwise did not exist to bind personally his co-owner. The right of one owner to bind another not springing from operation of law, and not being deducible from mere naked proof of title, it was necessary for libelants to prove either authority conferred, or participation in profits, or such a course of dealings as would warrant the inference that authority previously given was continued, or ratification. No such proof was offered. On the contrary, it may fairly be presumed that credit was given to Phillips alone. There was evidence that, during the time that the supplies were furnished, he was running the vessel on his own account, under an agreement with Koenig that he (Koenig) was not to be responsible for any debts, and Koenig received no part of the earnings during that period. There was no evidence of any act, representation, or course of dealing on the part of Koenig or Ford, or either of them, from which it could legally be inferred that they had clothed Phillips with authority to bind them. They were readily accessible, were seen nearly every day, and nothing was said to them from which they could reasonably infer that any credit was given to Phillips on their account. There are other and special considerations affecting so much of the indebtedness as was contracted prior to August 1, 1893, and as relates to Ford; but our conclusion renders any determination of them unnecessary. The decree of the district court is affirmed.

Digitized by Google

(78 Fed. 515.)

RIES v. HENDERSON.

(Circuit Court of Appeals, Fourth Circuit. February 13, 1897.)

APPEAL—FINAL DECREE.

A decree dissolving a partnership, enjoining, "until the final decree in this suit," both parties from disposing of the partnership property, directing that testimony be taken before a commissioner as to moneys claimed to have been advanced to the partnership by complainant, and that costs shall "abide the further and final decree of this court," is not a final, appealable decree.[1]

Appeal from the Circuit Court of the United States for the District of Maryland.

This was a suit in equity by Albert H. Henderson against Elias E. Ries for dissolution of a partnership existing between them, which was formed for the purpose of owning, exploiting, selling, etc., certain patents covering inventions made by defendant, Ries, relating to the art of electricity. The bill of complaint prayed for an injunction to restrain the defendant from selling or disposing of the patents, inventions, and other property of the partnership, for dissolution of the partnership, for the appointment of a receiver to wind up its affairs, and for an accounting. Among other things alleged in the bill, it was asserted that complainant had advanced large sums of money to the partnership for the exploitation and development of the patents, which sums he was entitled to have repaid to him before any division of the firm profits.

On June 19, 1896, the following decree, omitting the merely formal parts, was entered by the circuit court:

This cause having been set for preliminary hearing upon the prayer of the bill of complaint for an injunction and for the appointment of a receiver, and having been argued by counsel for the respective parties, and the court having read and considered the pleadings, exhibits, and all the proceedings, and having also considered the arguments of said counsel, it is thereupon, this 19th day of June, eighteen hundred and ninety-six, by the circuit court of the United States for the district of Maryland, sitting in equity, adjudged, ordered, and decreed that the co-partnership heretofore existing between the plaintiff and the defendant, under the firm name of Ries & Henderson, be, and the same is hereby, dissolved. And it is further adjudged, ordered, and decreed that, until the passage of the final decree in this case, both parties to this suit be, and they are, hereby restrained and enjoined from selling or in any manner disposing of any of the inventions, patents, and improvements or other co-partnership assets of the late firm of Ries & Henderson, or of any interest therein, except by mutual written agreement, and in pursuance of the special order of this court to be passed in the premises; but leave is hereby reserved to either party to this suit to negotiate prior to final decree for the sale of the entire or partial interest in any patent belonging to the partnership, and to report to this court any offer which he may obtain therefor; and this court will, after proper notice to the other party and the opportunity to him to be heard, proceed to pass upon the propriety of accepting or rejecting any such offer as may be so obtained, and as to the temporary and final disposition of the proceeds of sale. And forasmuch as it does not certainly appear from the proceedings what, if any, advances have been made by the plaintiff to or for account of the late co-partnership of Ries & Henderson, as charged in the bill of complaint, it is further adjudged, ordered, and decreed that testimony be taken by the parties before one of the standing commissioners of this

[1] As to what are final, appealable decrees and judgments, see note to Trust Co. v. Madden, 17 C. C. A. 238.

Digitized by Google

court to ascertain what moneys, if any, have been so advanced by the plaintiff; and, upon the coming in of said testimony, the court will proceed to finally decree as to the repayment and reimbursement to the plaintiff of such of the said advances as may be proper, and as to the manner in which his lien therefor, if any, upon the partnership assets, may be made effective and be worked out, and also as to the distribution of the firm assets between the parties. And, forasmuch as it is represented to the court by the defendant that it is necessary that certain appeals or legal proceedings be at once taken for the protection of the patent rights of the said firm, it is now further ordered that either party may advance the amount requisite to defray the expenses thereof, without prejudice, however, to either party, and with liberty to both parties, to be heard by this court as to the legal effect of such payment, and to it to decree hereafter as to whether the same has been properly incurred for account of the firm or for either party to this case, and as to the proper charge to be made therefor. And it is further adjudged, ordered, and decreed that the payment of the costs of this suit abide the further and final decree of this court, and that the plaintiff's application for the appointment of a receiver of the firm assets stand over until said final decree or the further order of this court.

From the foregoing decree an appeal was taken by the defendant on December 12, 1896. The complainant has now moved to dismiss the appeal, on the grounds (1) that, so far as it is an appeal from a decree granting a preliminary injunction, it was taken too late; and (2) that, as to the rest of the decree, the same was not final, and the appeal would therefore not lie.

John P. Poe and Arthur Stewart, for appellant.
Schmucker & Whitelock, for appellee.

Before GOFF and SIMONTON, Circuit Judges, and BRAWLEY, District Judge.

GOFF, Circuit Judge. This cause having been called for hearing upon the motion of the appellee to dismiss the appeal, and counsel for the respective parties having been heard in argument, and the court being of opinion that the decree of the lower court is not a final decree, from which an appeal will lie at this stage of the cause to this court to review the same, it is now here ordered, adjudged, and decreed by this court, this 13th day of February, 1897, that the appeal of Elias E. Ries be, and the same is hereby, dismissed, without prejudice to the rights of either party in the court below, and that the said Elias E. Ries do pay the costs in this court. Let the mandate issue forthwith.

(78 Fed. 517.)

LAKE NAT. BANK v. WOLFEBOROUGH SAV. BANK et al.

(Circuit Court of Appeals, First Circuit. January 18, 1897.)

No. 176.

1. JURISDICTION OF CIRCUIT COURT OF APPEALS—INTERLOCUTORY DECREE FOR INJUNCTION.

In a case in which a final decree would be appealable to the circuit court of appeals under sections 5 and 6 of the act of March 3, 1891, an appeal will lie to that court, under section 7, from an interlocutory decree granting an injunction, even though such appeal raises only the question of the lower court's jurisdiction.

Digitized by Google

2. SAME—APPEALABLE INTERLOCUTORY DECREE—INCIDENTAL INJUNCTION.

In a decree which appoints a receiver for a corporation, orders its officers to deliver the property into the receiver's hands, and enjoins them from interfering further with it, the injunction, while incidental to the appointment of the receiver, is not merely nominal, but forms a substantial part of the decree, and is therefore appealable. Such an appeal, however, raises only the question whether, assuming the receiver to have been properly appointed, the injunction was improvidently granted.

3. JURISDICTION OF CIRCUIT COURTS—NATIONAL BANK RECEIVERSHIPS.

Under the provision in the judiciary act of 1887–88, that "the provisions of this section" shall not affect the jurisdiction of the circuit courts in cases for "winding up the affairs" of any national bank, the circuit courts have at least concurrent jurisdiction (whether exclusive or not is not decided) with the state courts in cases of that kind, without regard to the citizenship of the parties.

4. SAME—CONFLICT OF JURISDICTION—COMITY—APPOINTMENT OF RECEIVERS.

A state court appointed a receiver of a national bank, but he never obtained possession of its property. The original complainant discontinued, and the defendant filed a motion to dismiss, but no formal order of dismissal was entered. *Held*, that the pendency of the suit in that condition was no bar to a subsequent suit between the same parties in a federal court for the appointment of a receiver, etc.

Appeal from the Circuit Court of the United States for the District of New Hampshire.

Reuben E. Walker and Hollis R. Bailey, for appellant.

Heman W. Chaplin (John R. Poor, on brief), for appellees.

Before COLT and PUTNAM, Circuit Judges, and NELSON, District Judge.

COLT, Circuit Judge. This is an appeal from an interlocutory decree appointing a receiver, and granting or continuing an injunction. The appellees (complainants below) have filed a motion to dismiss the appeal upon the ground that this court has no jurisdiction. In support of this motion, it is urged that in the assignment of errors the appellant raises only the question of the jurisdiction of the circuit court, and that under the act of March 3, 1891 (26 Stat. 826), this court cannot entertain an appeal which presents solely this question. Section 5 of the act declares:

"That appeals or writs of error may be taken from the district courts or from the existing circuit courts direct to the supreme court in the following cases: In any case in which the jurisdiction of the court is in issue; in such cases the question of jurisdiction alone shall be certified to the supreme court from the court below for decision."

Then follows a list of other classes of cases in which an appeal may be taken to the supreme court.

Section 6 provides:

"That the circuit courts of appeals established by this act shall exercise appellate jurisdiction to review by appeal or by writ of error final decision in the district court and the existing circuit courts in all cases other than those provided for in the preceding section of this act," etc.

Section 7, as amended by Act Feb. 18, 1895 (28 Stat. 666), provides as follows:

"That where, upon a hearing in equity in a district court or a circuit court, an injunction shall be granted, continued, refused, or dissolved by an interlocutory order or decree or an application to dissolve an injunction shall be refused in a case in which an appeal from a final decree may be taken under the provisions

Digitized by Google

of this act to the circuit court of appeals, an appeal may be taken from such interlocutory order or decree granting, continuing, refusing, dissolving, or refusing to dissolve an injunction to the circuit court of appeals."

By section 7 an appeal lies to this court in any case in which an appeal would lie from a final decree under the provision of this act. In order, therefore, to determine the jurisdiction of this court over the present appeal, it is necessary to inquire whether it could take jurisdiction on appeal from final decree. In McLish v. Roff, 141 U. S. 661, 12 Sup. Ct. 118, it was held that an appeal to the supreme court, under section 5, only lies after final judgment, and that at that time the party against whom the judgment of the court had been rendered has his election either to take the question of jurisdiction alone directly to the supreme court, or to appeal to the circuit court of appeals upon the merits of the case, as well as upon the question of jurisdiction. In the latter event the circuit court of appeals has authority to pass, not only upon the merits of the case, but also upon the question of jurisdiction; and it may then, if it deem proper, certify the question of jurisdiction to the supreme court. See, also, U. S. v. Jahn, 155 U. S. 109, 15 Sup. Ct. 39. As this case may be appealed to this court from a final decree, under the construction given to sections 5 and 6 by the supreme court, it follows that we have jurisdiction over an appeal from an interlocutory order under section 7, although such appeal raises only the question of jurisdiction. The provisions of section 7 are of a highly remedial character, and should not receive a narrow construction. These provisions were evidently intended to afford a speedy review by an appellate tribunal of all interlocutory orders or decrees granting or continuing injunctions, unless such review was clearly forbidden by the other provisions of the act.

The appellees further urge in support of their motion to dismiss that the injunction was merely incidental to the receivership order, and therefore not appealable under section 7. The interlocutory decree ordered the defendant, its officers and agents, forthwith to deliver the property held by them into the hands of the receiver, and absolutely enjoined them to refrain from interfering with the property. While the injunction order was incidental to the appointment of a receiver, it was not merely nominal, but formed a substantial part of the decree. The question whether an interlocutory injunction was erroneously or improvidently granted is appealable to this court. Blount v. Société Anonyme, 3 C. C. A. 455, 53 Fed. 98; Davis Electrical Works v. Edison Electric Light Co., 8 C. C. A. 615, 60 Fed. 276, 277; Construction Co. v. Young, 8 C. C. A. 231, 59 Fed. 721; American Paper-Pail Co. v. National Folding-Box & Paper Co., 2 C. C. A. 165, 51 Fed. 229. Potter v. Beal, 2 C. C. A. 60, 50 Fed. 860, is in no way in conflict with the position taken by the court in this case. In that case the court merely intimated that no appeal would lie, under section 7, in a case in which the injunction order was nominal, or in which the decree would be equally effectual without it. The appellees' motion to dismiss the appeal is overruled.

Digitized by Google

We now come to the consideration of the appeal. The appellant, under its assignment of errors, attacks the jurisdiction of the circuit court to make the decree appealed from, upon two grounds. By the second assignment of error the point is raised that the jurisdiction of the circuit court is dependent upon diversity of citizenship, and that, as the bill avers no such diverse citizenship, the court was without jurisdiction. Without passing upon the question whether the federal courts have exclusive jurisdiction in this class of cases, we are satisfied that by the act of March 3, 1887, as amended by the act of August 13, 1888 (25 Stat. 436), which provides that "the provisions of this section" shall not affect the jurisdiction of the circuit courts of the United States in cases for "winding up the affairs" of any national bank, the circuit court has at least concurrent jurisdiction with the state court in this class of cases.

The first assignment of error is based upon the ground that, the supreme court of New Hampshire having already appointed a receiver in a suit which is still pending between the complainants and the defendant in this suit, this court is without jurisdiction. We are of the opinion that the facts disclosed in the record do not state a case in which the circuit court should have declined to take jurisdiction by reason of the proceedings which were begun in the state court. The rule which requires that the court which first obtains jurisdiction retains it to the end is based largely upon the doctrine of comity. The original complainants in the state court discontinued the suit in that court. The defendant in that suit filed a motion to dismiss. The receiver there appointed never obtained possession of the res.

Upon the facts as they appear of record, although no formal order of dismissal was entered in the state court, we think the circuit court properly acquired jurisdiction. Whether a receiver ought to have been appointed is not before us upon this appeal, and we only decide that, assuming the appointment of a receiver to have been properly made, the order for an injunction should be affirmed. Construction Co. v. Young, 8 C. C. A. 231, 59 Fed. 721. Decree of circuit court affirmed.

(78 Fed. 536.)

COWEN et al. v. ADAMS et al.

(Circuit Court of Appeals, Sixth Circuit. February 8, 1897.)

No. 367.

1. SUIT UNDER WILL—NECESSARY PARTIES—LEGATEES.

One M. made his will, in 1880, leaving his estate to be equally divided among his four children and a grandson, the son of a deceased child. The will also referred to advances made by the testator to his children, and charged to them on his books, and declared that the provision made by the will was to be in addition to such advances, and that, in the settlement of his estate, such advances already made, and any that should be afterwards made, should not be treated as advancements, but as gifts, not in any manner to be accounted for by the children or grandson. Some time after the making of this will,

Digitized by Google

W., one of M.'s sons, met with financial disaster, and became very deeply involved. M. then directed J., another son, to do what was necessary to relieve W., and thereafter, through J., advanced very large sums to pay W.'s debts, taking W.'s notes therefor, and taking assignments of collateral from some of W.'s creditors. Shortly before the death of M., and when it was expected, the persons who afterwards became administrators with the will annexed took from W. a paper authorizing the application of his share of his father's estate to these notes. This paper W. afterwards revoked, and then revoked the revocation, and afterwards gave the administrators a receipt for nearly the whole amount of his share of the estate by its application to the payment of the notes, and thereafter he received the remaining collaterals, taken by his father when he paid W.'s debts, and which had not been realized on by him. In the meantime, in a suit instituted against W. by his wife, a decree had been entered, pursuant to which he conveyed to trustees, for the benefit of his family, all his interest in his father's estate. The trustees under this deed brought suit against the administrators executing M.'s will to set aside the receipt given to them by W., to establish W.'s right to his interest in his father's estate, and for an accounting thereof. *Held*, that the legatees under M.'s will were not necessary parties to the suit, either as it was thereby sought to set aside W.'s receipt or as it was sought to establish W.'s interest in the estate notwithstanding the advances to him.

2. CONSTRUCTION OF WILL—ADVANCES.

Held, further, that the dominating purpose of M.'s will was that the property he should leave at his death should be equally divided among his children and grandchild, irrespective of previous advances, and, while a debt from a legatee might be created which would be independent of the absolution accorded by the will, to establish the creation of such a debt would require clear proof of the existence of a distinct purpose on the part of the testator himself, at the time of the transaction, to put such debt outside the pale of the forgiveness written in the will, and that the advances made to W., for which his notes were given, though debts during M.'s life, were not shown by the evidence to be outside the provisions of the will, and they were extinguished on M.'s death.

3. ESTOPPEL—LEGATEE'S RECEIPT.

Held, further, that the receipt of the collaterals, to which he became entitled upon the extinguishment of his debt, did not estop W. to dispute the receipt given to the administrators, and that, in view of the position of trust in which the administrators stood towards W., the receipt procured by them from him, by which, without legal obligation to do so, he surrendered the greater part of his share of the estate, would not be permitted to stand in the way of the enforcement of his rights in the estate of M.

Appeal from the Circuit Court of the United States for the District of Kentucky.

This is a suit in equity brought in the circuit court for the district of Kentucky, by the above-named Benjamin R. Cowen, Evan F. Williams, and A. S. Frazer, appellants, as trustees under a deed of trust executed by William Means on the 26th day of December, 1891, and which purported to convey all the interest of the said William Means as devisee under the will of his father, Thomas W. Means, in trust for the purposes recited in a certain decree of the court of common pleas of Greene county, Ohio, against the defendants Thomas M. Adams and E. C. Means, as administrators with the will annexed of the estate of Thomas W. Means, and John Means, who had been connected with the transactions out of which the controversy grows. As the appeal is not prosecuted as against John Means, it is not necessary here to state the particular relationship of John Means to the subject-matter of the suit in respect to his liability to account. The object of the suit is to set aside a certain instrument of settlement and receipt given by William Means to the above-named administrators on the 16th day of October, 1890, and for a declaration establishing the right of the said trustees to recover, in virtue of the interest of William Means as legatee, a one-fifth interest of the estate of the said Thomas W. Means, and for an accounting and payment to them of the amount of the legacy bequeathed to the said William Means.

Digitized by Google

In order to a proper understanding of the grounds of the decision of this court, it is necessary to give a brief account of so much of the history of the prior events and of the transactions involved in the controversy as are deemed by the court material, supplemented, however, by some further incidental facts which are stated in the opinion. Thomas W. Means was on the 20th day of July, 1880, and for many years prior thereto had been, a resident of Hanging Rock, in the state of Ohio, and had reached the age of 77 years. He had been an active and capable man, engaged in many kinds of business enterprises, and had accumulated a large property, amounting to $700,000 or $800,000. He had had five children,—John, William, Mary, Margaret, and Sarah,—the latter of whom had married one Culbertson. Previous to the date just mentioned, Mrs. Culbertson had died, leaving her son, Thomas M. Culbertson, as her only heir. These five persons, the four children and the grandson, were all living at the date referred to. Prior to that time he had been in the habit of assisting his children, and in that way had already advanced to them large sums of money. He had opened accounts with each of them, in which he had charged them with the sums which he had furnished them, and given them credit for various items to which he had conceived them entitled for the purpose of keeping these accounts. He had assisted some of his children in business, introducing them into various enterprises in which he was himself concerned, and, when such enterprises had been disastrous or unprofitable, had charged off the losses to himself, or furnished them with the means to balance up their losses and take a fresh start; his purpose seeming to have been, while he lived, to take upon himself such burdens, and help them along through their misfortunes and discouragements. At one time, on December 9, 1873, he made a gift to his children of $400,000, $80,000 to each. Previous to that time he had advanced them, in all, more than $250,000. Without for the present going into further particulars of this kind, Thomas W. Means, on the said 20th day of July, 1880, made and executed his last will, the fourth and fifth paragraphs of which are here given:

"(4) I give, devise, and bequeath all the residue and remainder of my estate, personal, real, and mixed, wherever situated or located, of which I shall die possessed, to be equally divided among my four children, John Means, William Means, Mary A. Adams, and Margaret A. Means, and my grandson, Thomas M. Culbertson (son and sole heir of my deceased daughter, Sarah Jane Culbertson), who shall be living at the time of my decease, and the issue of any child now living, and of said grandson, who may then have deceased, such issue taking the share to which such child or grandson would be entitled if living. But said share given, devised and bequeathed to said grandson or his issue is to be held in trust as hereinafter provided, and to be subject to the provisions hereinafter contained as to said grandson's share.

"(5) I have made advances to my said children which are charged to them, respectively, on my books, and I may make further advances to them, respectively, or to some of them, and to my said grandson, which may be charged on my books to their respective accounts. I desire the equal provision herein made for said children, and the provision for said grandson, to be a provision for them, respectively, in addition to said advances made and that may hereafter be made, and that, in the division, distribution, and settlement of my said estate, said advances made and that may hereafter be made be treated, not as advancements, but as gifts, not in any manner to be accounted for by my said children and grandson, or any of them."

After the making of this will the testator continued to make advances to his children, and to keep regular accounts with them, as he had previously done. To some of them he advanced very considerable sums, thus: To John Means he supplied $20,685; William Means, $41,590; Mary A. Adams, $48,792; Margaret A. Means, $55,568. These, with former advances, made up the sum of $100,000 to each, exclusive of the $80,000 which, as above stated, he had given to each of them. No advances appear to have been made to the grandson, Culbertson, the reason probably being that he was a minor, and perhaps, also, because he had other resources, on his paternal side. John Means, the oldest son, was himself a prosperous man, and acquired a considerable fortune. William established himself in Cincinnati, and became a man of distinction there, being at one time mayor of the city. He became president of the Metropolitan National Bank, one of the leading financial institutions of the city. He acquired, and for many years maintained, the reputation of being a sound and capable business man. But the Met-

Digitized by Google

ropolitan National Bank, which had for some time been laboring under heavy embarrassments resulting from mismanagement and irregular dealings with its funds by the president, became so much involved that in February, 1888, it failed, and directly went into the hands of a receiver. By reason of his defalcations as trustee for large properties, and of his irregular transactions in the affairs of the bank, William Means became deeply involved, not only with respect to his character and standing as a man, but also in respect to his financial affairs. Proceedings, both civil and criminal, were threatened, and were imminent. While he had large and valuable collaterals, they could not be presently realized upon, and, if they could have been realized in full, they would have been scarcely sufficient to have met his liabilities. In this state of affairs he turned to his father, who in 1884 had removed to Ashland, Ky., for help. The latter summoned to his counsel John Means, his other son, and, after considering the ways and means of helping William out, he sent John to Cincinnati to investigate affairs, and do what should be found needful to relieve William in his embarrassed situation. The result was that, on its being ascertained that William's indebtedness to the bank amounted to the sum of $125,911.74, John Means paid to the bank that sum, and took an assignment to Thomas W. Means of all the collaterals which the bank held as security therefor, amounting, in all, at their par value, to the sum of $182,350,—their estimated salable value being $146,000. This was on February 15, 1888. On the following 22d day of February, at John's request, William Means executed his promissory note to Thomas W. Means for the sum of $125,911.74, which John had paid to the bank. The following is a copy of the note:

"Cincinnati, O., Feb. 15, 1888.

"Due Thomas W. Means, or order, one hundred and twenty-five thousand nine hundred and eleven and $^{74}/_{100}$ dollars, with interest from date.

"$125,911.74. William Means."

On the 11th day of March, 1888, John Means paid for William Means, to the Bank of Ashland, $15,027, to take up two notes, given by William Means, for which the Bank of Ashland held collaterals of the par value of $22,000, which were transferred to Thomas W. Means, and William Means thereupon executed to Thomas W. Means his promissory note therefor, as follows:

"Yellow Springs, O., March 19, 1888.

"One day after date I promise to pay to the order of Thomas W. Means fifteen thousand and twenty-seven dollars, for value received.

"15,027.00. William Means."

On August 20, 1888, Thomas W. Means took up a note of William Means for $5,000, and William Means sent to Thomas W. Means his note for that amount, with some accrued interest, as follows:

"New York, August 20, 1888.

"One day after date I promise to pay to the order of Thomas W. Means five thousand forty-one and $^{67}/_{100}$ dollars, for value received.

"$5,041.67. William Means."

Another transaction of like character was the payment by Thomas W. Means to Hunt & Gurkey of the sum of $2,100, for which, on October 24, 1888, William Means executed the following note:

"New York, October 24, 1888.

"One day after date I promise to pay to the order of Thomas W. Means twenty-one hundred dollars, for value received.

"$2,100. William Means."

At this stage of affairs, there appears to have been some scheme concocted for obtaining a nolle prosequi in reference to the criminal prosecution which had been commenced in the federal court on account of William Means' transactions in the affairs of the bank, or of obtaining a pardon therefor. In furtherance of this scheme, a note for $75,000 was made by William Means to Thomas W. Means, as follows:

"New Haven, Conn., November 9, 1888.

"One day after date I promise to pay to the order of Thomas W. Means seventy-five thousand dollars, value received, with interest from date.

"$75,000. William Means."

Digitized by Google

Appended to this note was the following:

"It is agreed, as part of the transaction by which I have procured a loan of seventy-five thousand dollars upon the foregoing note, that the amount thereof, and all the interest, shall be paid from my interest as devisee or distributee of the estate of Thomas W. Means.

"November 9, 1888. William Means."

Exactly how this $75,000 was intended to be used does not appear. It is not shown that the money was actually employed, and the scheme was either not pursued or fell through. William Means was tried upon the indictments in the United States district court at Cincinnati and acquitted. On the 22d day of November, 1888, another note was executed by William Means to Thomas W. Means for the sum of $45,000, as follows:

"$45,000. New Haven, Conn., November 22, 1888.

"One day after date I promise to pay to the order of Thomas W. Means forty-five thousand dollars, for value received, with interest from December 1, 1888.

"William Means."

Appended thereto was the following:

"The above is for money loaned to me by Thomas W. Means, on account of my indebtedness as executor and trustee of the estate of A. Labrot, deceased, and it is agreed, as part of the transaction by which I have procured a loan of forty-five thousand dollars upon the foregoing note, that the amount thereof and all interest shall be paid from my interest as devisee or distributee of the estate of Thomas W. Means.

"November 22, 1888. William Means."

John Means was acting as the agent of his father in all of these transactions, and used his father's funds in making the payments on account of which the notes of William Means were given. Certain correspondence took place between John Means and William Means, during the pendency of these transactions, in relation to the giving of the above-mentioned notes by William Means, and the form in which they were put, to which the appellants refer as explanatory of the purpose for which the notes, and the stipulations at the end of some of them, as above shown, were made. This correspondence is referred to in the opinion. Thomas W. Means, already 85 years of age, had, in 1888, become almost blind, and that affliction was increasing upon him. He was somewhat enfeebled in mind, and quite infirm, and by June, 1889, had become quite imbecile. He had, up to that time, at least, had a general understanding of what was being done for William, and approved of it. He was deeply troubled at the calamities which had befallen his son, and felt a deep interest in relieving him. Soon after the above-mentioned transactions in aid of William were begun, John Means, with the assent of his father, opened up a separate account in his father's books, in his own name as debtor, with reference thereto, in which were recorded the substance of the matters of account involved, and in this separate account John Means continued the record of the transactions.

Thomas W. Means died June 8, 1890, and on the 28th day of the July following his death Thomas M. Adams and E. C. Means were appointed administrators with the will annexed. These persons—Thomas M. Adams and E. C. Means—had, a short time previous to the testator's death, obtained from William Means the following instrument:

"Ashland, Ky., June 16, 1890.

"I hereby direct the executors of the will of Thomas W. Means, or the personal representatives hereafter to be appointed, to charge against my distributable share as heir at law of Thomas W. Means, or as devisee under his will, the notes heretofore given by me to Thomas W. Means; and I do further hereby assign such interest or share, or sufficient thereof to pay and discharge such notes.

"William Means.

"Witness:
"S. B. E. Dranan.
"James Means."

On the 17th, the day following, William Means delivered to the said Thomas M. Adams and E. C. Means the following paper:

Digitized by Google

"Ashland, Ky., June 17, 1890.

"To Whom It may Concern: This is to certify that my object in signing a certain paper, dated June 16, 1890, in which the executors of the estate of Thomas W. Means are directed to charge up my obligations against my interest in said estate, was done to insure the estate against loss through the purchase of such obligations, no matter how obtained, and for no other purpose whatever.

"William Means."

On the 28th day of July (although it bears date the 29th), Thomas M. Adams and E. C. Means, under appointment as administrators, indorsed upon the back of the paper above set forth, bearing date June 16, 1890, the following:

"This paper came into the possession of the undersigned June 16, 1890, and has been held jointly since. And now, as administrators with will annexed of Thomas W. Means, deceased, and upon our appointment and qualification as such, we note and indorse hereon its delivery and acceptance to and by us.

"E. C. Means,
"T. M. Adams,
"Administrators with Will Annexed of Estate of Thomas W. Means.
"July 29, 1890.
"Attest:
"John F. Hagar.
"W. P. Seaton."

Then, also, on the day of the appointment of the administrators, July 28th, William Means delivered to the administrators an instrument of revocation, as follows:

"To the Executors and Legal Representatives of the Estate of Thomas W. Means, Deceased, and to E. C. Means and Thomas M. Adams, Individually:

"Gentlemen: Inasmuch as, by a certain paper, dated June 16, 1890, it is claimed that I authorized certain notes to be deducted from or charged against my distributable share as heir at law of Thomas W. Means, and further assigned certain interests to pay said notes: Now, this is to notify you, and all other persons interested herein, that I hereby revoke and annul said paper writing, and all consent and authority conferred by it, and declare said paper to be null and void for any purpose whatever. And you are notified not to deliver said paper to any person, or make any use of the same; and I make this notification for the following, among other, reasons: (1) That said paper was not to be delivered without my consent. (2) Said paper was wholly without consideration and inoperative for any legal purpose. (3) Said paper was signed without legal advice or proper information as to the contents or meaning. (4) Said paper was obtained from me in ignorance of important facts and of my legal rights. (5) Said paper was obtained under circumstances that make it inequitable that I shall be bound by it. (6) Said paper was not intended to be used in any manner against my interests or desire.

"Yours, respectfully, William Means.
"Ashland, Ky., July 28, 1890."

On October 4th following, William Means revoked his revocation of July 28th, by the following indorsement upon the margin thereof:

"To E. C. Means and Thomas M. Adams, Administrators with the Will Annexed of Thomas W. Means:

"The matter of revocation contained in this notice and paper are hereby revoked.
"October 4, 1890. William Means.
"Attest:
"John F. Hagar."

On the 16th of October, William Means gave the administrators the following receipt:

"Ashland, Ky., October 16, 1890.

"Received of Thomas M. Adams and E. C. Means, administrators with the will annexed of the estate of Thomas W. Means, deceased, the sum of one hundred and thirty-six thousand and thirty five and seventy-five one-hundredths dollars, being a part of my distributable share as legatee under said will, applied by them,

Digitized by Google

as ordered by me, upon the following notes and claims owed by me to the estate of said decedent, and payable to his order, viz.: [Here follows description of 10 notes, with balance due on each, aggregating $136,035.75.] This receipt is given in pursuance of settlement made October 16, 1890. William Means.

"Attest:
"John F. Hagar.
"A. E. Lampton."

On the same day, the administrators took from William Means a further receipt, which was dated the 17th, and changed to the 18th, for the sum of $26,240.79, as a part of his share in the estate, the money to be paid to his brothers and sisters on account of antecedent debts, if there should be enough left for the purpose, after paying the above-mentioned 10 notes. It appears that the sisters were unwilling to carry out this part of the proposed arrangement, and the receipts were returned to William Means by the administrators shortly afterwards. On October 23, 1890, William Means received from E. C. Means the notes of William Means, which had been taken up from the Metropolitan National Bank, February 15, 1888, amounting to $125,911.74, and received, also, certain collaterals, which had been taken by John Means for his father at the time when he paid William Means' obligations.

There is evidence tending to show that William Means, at the time when he signed the instrument of October 16th, was induced to do so by the expectation that he would in some way get the expected surplus of $26,240.79, which was, at about the same time, receipted for by him to be paid to his brother and sisters, as above mentioned; but the evidence does not disclose very clearly in what way this was to be accomplished. The appellants introduced evidence, which, they claim, tends to show that, some time in February, 1890, William Means, having fallen into a pecuniary controversy with his wife and children (more particularly his wife), and being pressed for a settlement upon them, with the intention of satisfying such claims and reconciling their differences, entered into an agreement whereby he undertook to assign and transfer to them his expectancy in his father's estate. It appears, from the proof in the case, that a suit was commenced in the court of common pleas of Greene county, Ohio (where the wife and children then resided), by them, against William Means, for the purpose of compelling the specific performance of such an agreement as having been made in 1890. Process was served upon William Means, but he did not defend the suit. The case was heard upon the pleadings and proof introduced before the court, and thereupon a decree was rendered, finding the existence of the agreement above mentioned, and substantially decreeing a specific performance thereof, and directing the defendant, William Means, to execute a deed of trust, conveying his expectancy to the present complainants as trustees, "upon the trust that they take possession of all of said property, and convert it into money, and hold and invest the same upon security such as is required by a guardian under the laws of Ohio, being hereby vested with all the authority and powers necessary or appropriate for such purpose, and that they apply the net increase thereof, and so much of the principal as may be necessary, to the reasonable support of the family of William Means, including himself, the plaintiffs, and their said mother: provided that, upon agreement in writing of all the parties as to distribution of said trust funds, the trustees shall execute such agreement,"—with other incidental details and directions. And such a deed was executed by William Means, December 26, 1891.

The answer of the defendants sets up and claims that the sums advanced by Thomas W. Means to William Means, on and after February 15, 1888, were loans, and were not included in the scope of the will of Thomas W. Means, whereby advances of the kind therein described were to be forgiven; that, therefore, the administrators are entitled to set off the demand of the estate arising thereon against the legacy directed to be paid to William Means; and, further, that, if this were doubtful, the questions creating the controversy on this matter have been settled by and between the administrators and William Means, without notice of any assignment by him to the complainants, and that, upon such settlement, they have given up to the said William Means certain valuable securities; and, incidentally, they claim that the alleged agreement for an assignment to the wife and children, which formed the basis of the judicial proceeding in Greene county, did not, in fact, exist; and they also insist, on this appeal, that the suit is defective

Digitized by Google

for want of proper parties defendant, it being urged that the other legatees under the will of Thomas W. Means should have been made parties to the suit.

Upon hearing the case on the pleadings and a voluminous body of proof, the presiding judge in the court below rendered an opinion, in which he suggested a difficulty in dealing with the case for the purpose of distribution, arising from the want of necessary parties to the suit; but, nevertheless, the court proceeded to discuss and decide the merits of the case, reaching the conclusion that the sums paid for the benefit of William Means were loans, not intended to be covered by the bequest in the will, and holding, further, that the question of the validity of the settlement by William Means with the administrators ought not to be decided in the present suit, but be postponed until the general settlement of the estate should be had, with all the necessary parties before the court. Thereupon, the following order was entered: "This cause came on to be heard at this term, and was argued by counsel, and thereupon, on consideration thereof, the court finds the issue joined against the plaintiffs, and in favor of the defendants, and the bill is dismissed as against the defendant John Means at the cost of the plaintiffs. The plaintiffs are given leave, within thirty days, to amend their bill, so as to make it a bill for the general settlement of the estate of Thomas W. Means; but such amendment must be upon the basis of the conclusions of the court upon the issues already joined, as stated in the opinion herewith filed, and, in default of such amendment, the bill shall stand dismissed, as against all the defendants, at plaintiffs' costs."

The complainants having declined to amend their bill by bringing in other parties, a decree absolute was entered on the 31st of July, 1895, dismissing the bill, with costs, but without prejudice to the right of the complainants to recover in another suit the amount of said William Means' legacy, over and beyond the amount of the receipt of said William Means, for $136,035.75, and without prejudice to any issues not joined and found against them in this suit. It should further be stated that the court below held that John Means acted as the agent of his father in the transactions involved in the controversy, and was, therefore, not liable to account to the complainants. Accordingly, the bill was dismissed, as against him, unconditionally. The complainants appealed against both parts of the decree,—that in favor of John Means, as well as that in favor of the administrators; but they have since dismissed their appeal as against John Means, thus leaving only the question of the correctness of the decree of the court below in respect to the principal questions in the case touching the transactions in the furnishing of money by Thomas W. Means to William Means, and the settlement and receipt between the latter and the administrators.

John Little and John J. Glidden, for appellants.
Lawrence Maxwell, Jr., for appellees.

Before LURTON, Circuit Judge, HAMMOND, J., and SEVERENS, District Judge.

SEVERENS, District Judge, having made the foregoing statement of facts in the case, delivered the opinion of the court.

The first question, in due order, which we are required to decide, is whether the suit is defective for the want of parties in respect to the object sought to be attained. The suggestion of the defendants is that the other legatees than William Means should have been made defendants. The object of the bill is to obtain a decree setting aside a receipt given to the administrators by William Means for the legacy given him by his father's will, and establishing the right of the complainants to recover the amount of such legacy. It cannot be doubted that the subject-matter of the suit is one of equitable cognizance, and that the bill was filed in the proper court. Payne v. Hook, 7 Wall. 425; Byers v. McAuley, 149 U. S. 608, 13 Sup. Ct. 906. The transactions in

Digitized by Google

which the receipt was obtained were conducted in behalf of the estate by the administrators, and by them only. They alone represented the estate, and they are its sufficient representatives in a suit to set it aside.

In respect to the other branch of the relief sought, attention must be given to the essential nature of the controversy. It related substantially to the question whether certain funds which had been supplied by Thomas W. Means to William Means were in the nature of a debt to the estate, and so competent to be set off against his legacy. This is the theory of the counsel who represent the administrators, and we think it is entirely correct. Administrators and executors are possessed of the legal title to the personal property of the estate. If there is a debt, they have a right to it in their representative capacity. In any controversy as to whether it is a debt or not, they are the proper litigants, and the only proper ones on that side of the controversy. They are trustees of the estate, and whether a certain claim is or is not parcel thereof is to be determined in a suit in which they stand for the estate. That there are legatees who are consequentially interested in the result does not make it necessary that they should be present in the suit, unless in a case where the trustees behave fraudulently towards them. The beneficiaries may sometimes be proper parties, but ordinarily, at least, they are not necessary parties. The controversy, as above stated, is the only one which exists, except that which relates to the receipt. No one questions the existence of the will, or the right of William Means to the legacy, and the only question is, as before stated, whether he owes a debt to the estate which must be set off against it. The question in this case is one relating to personal property only. The administrators have not the title to real estate. That passed directly to the devisees. The personal property they take from the hand of the administrators. We think that the administrators were the competent representatives of the estate, and the only necessary ones as the controversy now stands. It may be that the court cannot go so far as to order distribution, but it may go so far as to determine the right of complainants, and set aside the receipt, if that should be held proper. This would be no new thing. There are several cases in the supreme court and circuit court reports, where that has been the limit of the action of the court. Payne v. Hook, supra, is one of them, and is familiar. Nor is the bill premature for such purposes.

In the court below no question was raised as to the necessity of other parties until the hearing, when it seems to have occurred to the court that the suit might, on bringing in the other legatees, be treated as one for the settlement of the estate and proceed as such. In his opinion the learned judge held against the complainants on the principal question, "that the balance due by William Means to the estate of his father at his death was properly a debt, and not a gift." The court thereupon caused to be entered an order giving leave to the complainants to amend their bill, so as to make it a bill for the general settlement of the estate of Thomas

Digitized by Google

W. Means, but that such amendment must be upon the basis of the conclusions of the court upon the issues already joined, as stated in the opinion of the court, and that, in default of such amendment, the bill be dismissed. The complainants having declined to amend, the court directed the following decree, which was entered:

"The complainants having failed and declined to amend their bill herein, as permitted by the order entered May 25, 1895, or within the extended time allowed by subsequent orders of this court, it is now adjudged and decreed that their said bill be, and the same is hereby, dismissed, and the defendants shall recover their costs herein expended. But this dismissal is without prejudice to the right of complainants to recover in another suit the amount of one-fifth interest in the estate of Thomas W. Means, deceased, over and beyond the amount of the receipt of William Means for $136,035.75, mentioned in said bill, and without prejudice to any issues not joined and found against them in this suit."

For the reasons already stated, we think there was no defect of parties for the principal objects of the bill. And, clearly, at that late stage of the case, no objection of the kind having been previously taken, the defendants were not entitled to have the complainants turned out, if they were entitled to some part of the relief sought, even if the suit were so constituted that all the purposes of a bill of wider scope could not be accomplished. McGahan v. Bank, 156 U. S. 218, 15 Sup. Ct. 347; Society of Shakers v. Watson, 15 C. C. A. 632, 68 Fed. 730.

The court below must have thought that the bill was sufficient for the purposes of deciding that the advances made to William Means constituted a debt to the estate, for it entered a decree which was expressly made final on that subject. The court declined to decide whether the receipt in question was valid or not, leaving that as one which might be tested on the final settlement. But the bill alleges the title of William Means to the legacy, and, in effect, the fraudulent procurement of the receipt from him without payment, and with knowledge of the complainants' rights under their assignment from the legatee. The pleadings were understood to involve the validity of the receipt while the parties were taking the testimony. We cannot doubt that this question was fairly open for decision, and we conclude that the proper parties were before the court for deciding as well the question of the existence of the claim as a debt as also the question whether the receipt was a valid recognition of it, and a release thereof.

Counsel for the administrators claim that, if William Means owed this debt, as one which survived the testator's death, it was and is proper matter of set-off against his legacy, and we think this claim well founded; and the proposition has, in this case, the support of an additional equity arising from the insolvency of the legatee. 2 Woerner, Adm'n, § 564; Wat. Set-Off, §§ 189, 190; Courtenay v. Williams, 3 Hare, 539; Hodgson v. Fox, 9 Ch. Div. 673; Blackler v. Boott, 114 Mass. 24; Brown's Adm'r v. Mattingly, 91 Ky. 275, 15 S. W. 353.

Upon the merits, the fundamental question is that which relates to the construction of the will of Thomas W. Means, the fourth and fifth paragraphs of which are set out in the preceding statements of facts. Much acute analysis and criticism has been

Digitized by Google

bestowed by counsel on both sides upon its interpretation, and various canons of construction invoked. But we think the intention of the testator is so clearly indicated as scarcely to require the aid of more than the primary rule that, when the dominating purpose is clearly seen, the language of the will is to be construed, if possible, in such a way as to give it effect. This is called the "pole star" in discovering the intention. By the fourth paragraph, the testator devises and bequeaths all his personal property to his four living children, and the son of his deceased daughter, share and share alike. Then, by the fifth, after reciting that he had already made advances to the legatees, which had been charged upon his books, he goes on to say that he desires the equal division he made in the fourth paragraph "to be a provision for them, respectively, in addition to the advances" already made or which might thereafter be made, and that, in the division and distribution of his estate, the advances which he had made, whether before or after the making of his will, to any of his children, should "be treated, not as advancements, but as gifts, not in any manner to be accounted for by my said children or grandson, or any of them." The language could hardly have been made plainer to indicate that the leading purpose of the testator was that the property which he should leave at his death, irrespective of what he might have advanced to them during his life, should be divided among the five persons named. What they should have received from him, by way of loan, no longer was to be treated as such, but was to be forgiven. He uses the word "advances" in the sense of "furnishing," "supplying," in advance of the final distribution of his will. It is absurd to suppose that he used the word as equivalent to the technical word "advancements," for, in the face of the disposition to be made of his property at his death, he must have known that if, in the meantime, he should bestow property upon them, whether by way of gift or loan, it would not be an "advancement," as that word is used in legal phraseology. In the nature of things, it was not possible for him to have intended by "advances" the same thing as "advancements," for that involves an intention, at the time of supplying the money, that it shall be such. Besides, he uses that term indiscriminately to apply to what he had given and charged to his children before the making of the will, as to what he might thereafter charge them. The legacies of the equal provision were to be "in addition" to such advances, and how could the testator be supposed to have used the word "advances" in its technical sense, which involves a satisfaction or diminution of the legacy pro tanto, when he expressly declared that the legacies should be in addition to them? The testator intended that they should not be eaten away by what he should be moved to do for his children during his life. The will becomes operative upon the death of the testator. What this will then meant was this: Whatever the testator has helped his legatees to before this time, when distribution has finally come, though then a debt, is now forgiven. It "is not in any manner to be accounted for." The equal distribution now to be made of what remains is "in addition to said advances." For the lack of a more

Digitized by Google

suitable word, we have frequently used this word in this opinion to express a similar meaning to that for which the testator employed it.

We are not prepared to say that under no circumstances could a debt from a legatee to the testator be created as an obligation independent of the absolution accorded by the will. Indeed, we think otherwise. But we think, also, that, having regard to the manifest purpose of the testator, when this will was made, to hold a free hand to help his children during his life as their necessities might require, and then at the end to divide what remained of his property equally among them, the court ought to require clear proof of some distinct purpose, on the part of the testator, during the transactions when he furnished the helping means which is supposed to have created the debt, to put that debt outside of the pale of the forgiveness which he had written in his will. And it must have been his purpose, and not that of some other. Even an expectation on the part of the legatee that the moneys paid for his benefit would, in the end, come out of his share of the estate, would not change the situation, unless the testator himself had a corresponding intent. He was the master of his fortune, and if he did not lend his money with the intent that if not repaid in his lifetime it should be repaid to his executors, then it would fall under the provisions of this will. There is not to be found in this record any such clear proof of the purpose of the testator to establish by the furnishing of the financial help, which he did, to his son, an independent obligation on the son's part which, if not paid during his life, should not be condoned by the provision in his will. At the time when he sent John to Cincinnati to aid William in his distress, the substance of all he said, according to John's account, was to go and do for William what he thought best. John at that time held a power of attorney from his father, some time previously given, "to receive money, sign checks, notes, drafts, and bills of exchange; to indorse notes, checks, drafts, and bills of exchange payable to me or my order; to buy, sell, and transfer notes, bonds, stocks, bills of exchange, drafts, and checks,—hereby allowing, ratifying, and confirming whatever said John Means, attorney in fact, for me and in my name, may do by virtue of this authority." So far as appears, this, and the direction from his father to do what he thought best, was all the authority which John had when he went to Cincinnati and paid off William's liabilities to the bank, amounting to over $125,000,—a sum almost as large as the amount covered by the receipt in question. It does, indeed, appear that, by the father's acquiescence, upon the suggestion of John, who had the handling of his father's books, the account of these transactions was entered in a distinct place in these books, and they were kept separate from the former accounts with William. But there is not much, if anything, in all this, or in anything else disclosed by the testimony, to prove that Thomas W. Means had a purpose to banish William Means from his favor, or isolate him from the benefits of the plan of distribution of his property after death which had become the settled purpose of his life. It was immaterial to that purpose in what book or how the account was kept. Whenever and however

Digitized by Google

kept, the charge would fall under the provision of exclusion by the will in the end, and the details of the bookkeeping he may well be deemed to have left to John, who had all such matters in charge. He had himself become blind, and incapable of supervising his books in person, and, as he confided in John, there was no reason for his going over them with the help of others, even if we assume that there was something on their face which disclosed this extraordinary purpose, which, indeed, we think is contrary to the fact. John's attention, when he testified in the case, was repeatedly drawn to his interview with his father about helping William, and the mode of keeping the books, but he continued to say that substantially all his father said was to do as he (John) thought best in respect to both those matters. In reply to this question of his counsel, "State what, if anything, you said to your father with reference to taking a note from William Means for the amounts that he obtained after the failure of the bank in preference to a receipt," he said, "I gave as a reason to him that a receipt or charge on his books, simply, would not have the same effect, in law, that a note showing indebtedness to him would; that my understanding of his will, as he had made it, as he understood it, that it was better to take note than have an account or receipt,—to take a note showing evidence of indebtedness, and the collaterals received or redeemed from the bank on sale to be applied as credit on the note, keeping it as an indebtedness, in the shape to indicate and show an indebtedness." To the further question, "State what answer, if any, he made," he replied, "He told me to do as I thought was the best way to do,—to do as I thought best." As the father undoubtedly intended to keep it as an indebtedness, John's statement to him imported nothing more than the mere question as to the best mode of doing the business "in the shape to indicate and show an indebtedness," and there is nothing in the very full detail of testimony given by John to show that on any occasion the idea of establishing an indebtedness beyond the scope of the will was ever broached to his father, or that anything ever fell from him to show that such an idea had occurred to him. There was no suggestion by John to William, at the time when he came to his relief, that anybody expected that the money which was being supplied to him by his father was to be put beyond the operation of the will, or would stand on any special footing in that regard. On the other hand, we think the moral probabilities are all against the appellees' contention. Thomas W. Means was a man of strong character and fixed adherence to his plans in life. He was also a man of strong paternal affections, and had been accustomed to extend his assistance and support to all his children by employing his large means on every occasion of their need. It is incredible that he should have changed his attitude when William's calamities came upon him. The latter had gained considerable distinction in life, and no doubt he felt sensible of the credit to the family which his son's attainments reflected. He was the character of man who would be likely to have taken pride in them. He did not then know what, if any, moral delinquency there was in William's transactions. He knew that his son

Digitized by Google

was in financial distress, and he came forward as was his wont, to help him out and re-establish him on solid ground. We are fully persuaded that we do him exact justice in refusing to believe that he then had a thought of inaugurating a new plan of dealing with William's expectancy. And if he did not then have such purpose, there is nothing in the evidence which would justify the belief that he at any time afterwards formed one.

There is much testimony going to prove the vigorous and persistent efforts of others interested in the estate to impress upon those transactions the character which their interests inclined them to think would be just. We greatly doubt whether John Means had at any time any desire or intention to treat the advances made for William as excluding him from his share in his father's estate. It appears, and much stress is laid upon this by the appellees, that William gave his notes for the sums paid out for him, and towards the last appended to them a sort of pledge of or charge upon his expectancy. The giving of the notes would not, of itself, alter the character of the advances. There is no doubt that Thomas W. Means was accustomed to enter his charges in his books as denoting an indebtedness from his children to himself, or that he intended to continue that practice, and to hold them as debtors. The will signifies as much, when read in connection with his books, to which it refers; and, if his advances had meant gifts, the provision about them would have been superfluous, for a gift is neither an advancement nor a loan. If they were intended as loans for the time being, as no doubt they were, there was nothing out of the way in taking notes for them. But in the original and main transaction even this was not done. The subsequently taking a note was evidently an afterthought, and we think the probabilities are very strong that the taking of the note was not with any view to confirm, as against William, the idea that he was creating a debt to his father of any extraordinary character. There are many letters in evidence which passed between John and William during the time that these transactions were going forward. They are too many to transcribe here. We shall state the substance of them. On John's part they are full of manly tenderness and sympathy. He speaks in them of taking notes, but there is no intimation that they were to be taken for the purpose for which they are now sought to be used, and so of the pledges attached to some of the later notes. They signify, on the contrary, that the object was to put up a bulwark against the attacks of creditors, and to shield the collaterals which John had taken from William's creditors on paying them his debts, and probably, also, the legacy of William, for the father was old, and, as John's letters show, was not expected to survive for more than a short time. After John had returned home from Cincinnati on the occasion when he paid out $125,911.74, he wrote William, stating the sum he had paid, and said, "I think you had better send me a note at one day in father's favor for the amount," and that he had had a talk with a lawyer on his way up, who agreed with him that that was best, to close the matter up at present. This was

Digitized by Google

the 16th of February. On the 20th of February, he wrote William again, saying:

"Herewith find forms which explain themselves. Please copy, sign, and return to me at your earliest convenience. * * * I also think it best for you to have as herewith indicated, fearing suits will be brought against you and other directors which may give you trouble as it now stands."

One of these forms was that of the note for $125,911.74. To this William, on the 21st, replied:

"Yours of the 20th received, and I send you by this mail my note to Thomas W. Means, or order, for $125,911.74; receipts for $700, $1,200, and $1,000, February 10th, 11th, and 18th, respectively; and authority to dispose of securities,—all as requested by you. I fully agree with your action in the premises as the best preparation for the civil suits which are likely to follow."

On the 23d John again wrote to William, saying:

"My Dear Will: Yours of the 21st inst., note and authority to sell securities, came to hand last evening. Am sorry that my reference to father's sight caused you trouble. He keeps cheerful and contented, walks out every day if good weather, some one taking his hand as he walks. Have explained to him my action in your affairs, amounts paid, how obtained, the advantage of saving securities pledged from being sacrificed, etc. He understands all, but soon forgets details, so that have to explain again when next I see him, and always ends by telling me to do as I think best for you."

In this correspondence, John's purpose in taking the note and authority to dispose of the collaterals is somewhat (though not very) obscurely stated, but it is not difficult to understand what he meant, or how William understood it. It is contended that this was a dishonest and illegal purpose, and that William should be precluded from setting up the invalidity of the notes. But the suggestion of taking them came from John. The correspondence between him and William, above referred to, shows that William was in great trouble and distress. He was agitated by the sense of his financial disaster, his becoming discredited as a man, and the fear of impending criminal prosecution. He confessed to John his unfitness for doing business, and he therefore turned over to him the charge and management of affairs. This correspondence, as well as the other evidence, all concur in showing that William yielded to John's suggestions, and followed them without question. John stood in the relation of a fiduciary toward his brother. In such circumstances it would be a strange perversion of the doctrine of estoppel to hold that William should be the party who is estopped. Such facts would indicate the propriety of holding the administrators to be estopped from setting up the products of John's unlawful proceedings, assuming they are such, as a bar to William's claim. The administrators do not represent any person who could have been defrauded, and it does not appear how these administrators of Thomas W. Means can assert any rights which belong to creditors, unless they are themselves such. We are convinced that the notes and instruments charging the legacy were intended to be operative only in case the creditors should proceed against the collaterals or for the purpose of subjecting William's legacy to the payment of their debts.

It is contended, on the part of the administrators, that it is not competent to controvert, by parol testimony, the plain terms

Digitized by Google

of a written instrument, and this is undoubtedly a well-settled rule; but it does not apply to an instrument which has been given with the intention of both the parties thereto that it should become operative only upon some condition. 2 Whart. Ev. § 927; Burke v. Dulaney, 153 U. S. 228, 14 Sup. Ct. 816. In the case cited, the rule was stated and applied in an opinion delivered by Mr. Justice Harlan, in which he cited and discussed a large number of authorities illustrating the subject. Ware v. Allen, 128 U. S. 590, 9 Sup. Ct. 174; Pym v. Campbell, 6 El. & Bl. 370, 373; Davis v. Jones, 17 C. B. 625; Wallis v. Littell, 11 C. B. (N. S.) 369; Wilson v. Powers, 131 Mass. 539; Pawling v. U. S., 4 Cranch, 219. Besides this, when we consider the relations of the parties, it could not be permitted that the administrators should avail themselves of instruments, procured by John Means for the professed purpose of benefiting William, as a means, by converting it to another purpose, of cutting him off from his legacy. We cannot, therefore, hesitate in reaching the conclusion that there was no intention on the part of the testator, in making the advances to William on February 15, 1888, and subsequently, to create an obligation on William's part which would not be forgiven by his will. Whether John Means conceived such an idea, at a late stage in the transaction, we are not sure, and it is not necessary to decide. It is probable that William anticipated that some such fate might befall him. After his downfall, he seems to have been unsteady in his course, sometimes inclining strongly to his father's family, and seeming to be anxious to secure their affection and favor, and willing to do as they wished to that end. At other times he turned to consider the welfare of his own family, and his own obligations towards its members.

Having reached the conclusion that the debts incurred by William Means to his father were extinguished by the will, and that the administrators had no just foundation for claiming William's debts as a set-off against his legacy, it remains for us to consider whether what has been done between the administrators and William should be treated as a satisfaction of it. The defendants have exhibited extraordinary diligence in obtaining from William repeated renunciation of his claims. Some days before the testator's death, they obtained one such, and then, upon the day of their appointment, they solemnly indorsed upon the instrument their acceptance of the same as administrators, notwithstanding he had in the meantime revoked it; and on later occasions they obtained like concessions, culminating in the receipt and order of October 16, 1890, now in controversy. Such activity on the part of an administrator executing a will, in procuring the surrender of one who, by its terms, is a legatee, excites suspicion that they were conscious of standing on dubious ground, and ill comports with the duties of one standing in the place of a trustee for all the parties in interest. It is a violation of his duty when an executor becomes a partisan for one legatee and sacrifices the other. The law will not permit any unfairness on his part, or sanction a proceeding whereby the legatee is induced by his trustee to give

Digitized by Google

up valuable rights without any, or a wholly inadequate, consideration. Here there was no consideration for the abandonment of his legacy by William Means to the administrators. It is contended by the appellees that the collaterals given up were valuable, and that William could not retain them and repudiate his receipt. Nearly all of them had been realized upon during the father's life, and the proceeds credited to William. A small part of them only were left. The collaterals which they surrendered to him had become his own property, when the debts which they secured had been extinguished by the will. While the father was alive, he was a creditor of William in respect of the moneys loaned to him, and undoubtedly he had the right to enforce the collaterals, and thereby satisfy or reduce William's debt; but the situation was changed at his death. Then the will came into effect, and, the debt itself being discharged thereby, the purposes of the security ended by inevitable consequence. These collaterals had all the while remained in John's hands, and were obtained from him by one of the administrators, to turn over to William, whose receipt states that they were "received of E. C. Means (from John Means)." These collaterals the administrators claimed as property which they held in pledge for the debt which they asserted in favor of the estate against William. William had lost all his property, and was in very straitened circumstances. Since his downfall, he has been broken in spirit and wavering in his purposes. He seems at times to have been impressed that the administrators had a moral, if not a legal, claim upon him that he should yield up his legacy to the estate, and this claim was pressed and insisted upon by the administrators. That they had no such legal claim upon him we have already determined. His brother and sisters all being in affluent circumstances, and his own family in needy circumstances, that he should have voluntarily given up the whole of this large sum, with no mistake in regard to what his legal rights were, it is difficult to believe. It amounted simply to a gift to the administrators for the benefit of the other legatees, whose only claim rested on the bounty of the testator. Courts of equity view such transactions with distrust, and, if the circumstances indicate that the trustee has dealt with the beneficiary unjustly, will not hesitate to set them aside. The absence of any adequate consideration in itself raises a presumption of unfairness, which the trustee is bound to repel. Equity will relieve the legatee in such transactions, where he has, under a misapprehension of his legal rights, surrendered to the trustee valuable interests without any adequate consideration, especially where the situation is such that no harm will come to the interests of others. Such would be the case where the claim relates to a fund which has not yet passed beyond control. These propositions are amply sustained by authority. 1 Story, Eq. Jur. §§ 307, 308; 2 Pom. Eq. Jur. §§ 948, 951, 955, 956, 958, 1088; Taylor v. Taylor, 8 How. 183; Comstock v. Herron, 6 U. S. App. 629, 5 C. C. A. 266, and 55 Fed. 803, and the cases there cited; Mills v. Drewitt, 20 Beav. 632; In re Ashwell's Will, Johns. Eng. Ch. 122; Snow v. Booth, 2 Kay & J. 132; Oil

Digitized by Google

Co. v. Hawkins, 20 C. C. A. 468, 74 Fed. 395. "It is not," says Mr. Justice Story, *ubi supra*, "upon the feelings which a delicate and honorable man must experience, nor upon any notion of discretion, to permit a voluntary gift or other act of a man, whereby he strips himself of his property, that courts of equity have deemed themselves at liberty to interpose in cases of this sort." They "will not, therefore, arrest or set aside an act or contract merely because a man of more honor would not have entered into it. There must be some relations between the parties which compel the one to make a full discovery to the other or to abstain from all selfish projects. But when such a relation does exist, courts of equity, acting upon this superinduced ground, in aid of general morals, will not suffer one party, standing in a situation of which he can avail himself against the other, to derive advantage from that circumstance, for it is founded in a breach of confidence." It makes no difference that the other legatees would ultimately obtain the benefit of the wrong. However innocent of it they may be, it would come tainted to their hands. Even gifts between persons who stand in no confidential relation to each other are watched with jealousy. 2 White & T. Lead. Cas. Eq. 582; Cooke v. Lamotte, 15 Beav. 234. Where the transfer is of a large sum, and constitutes the whole of the property of the party making it, himself having obligations to those in need, to one standing in no need, it raises an almost insurmountable presumption that there has either been some untoward influence or gross misconception on the part of the party making it of his rights and obligations. It is possible that the administrators were actuated by a purpose to get William's share out of the way of creditors, thinking the other legatees were more justly entitled to it; but they do not charge themselves with any such purpose, and we shall not impute it to them. We are, therefore, of the opinion that the transactions which took place between the administrators and William Means, among them that of taking the receipt of October 16, 1890, ought not to be allowed to bar the enforcement of the payment of the legacy.

In view of the conclusions which we have reached in respect to the title of William Means to the legacy in question, it is not necessary for us to decide whether, as against the administrators, there is any sufficient proof of the existence of the agreement between William Means and the members of his family which is said to have been made in February, 1890. The trust deed executed by him on December 26, 1891, conveyed his interest to the present complainants as trustees. As between William Means and the complainants in the Greene county court of common pleas, there having been due service of the process upon him, the decree therein rendered, and the trust deed, were effective in transferring the title, and estop him from denying that it was in fact transferred. It is no concern of the administrators whether they are required to pay the legacy to the legatee, or to his assignee; nor can they require that the rights of William Means' creditors should be litigated in this suit. They are not parties, and that subject could only be considered in independent litigation. Akin to that mat-

Digitized by Google

ter is the question presented in regard to the complainants' trust being in part for the benefit of the grantor in the deed. Whether, as to creditors, that part of the trust would be obnoxious to their attack, we do not, for the reasons above stated, think it is necessary or proper to decide.

The result is that the decree of the court below must be reversed, and the cause remanded, with directions to enter a decree for the complainants setting aside the receipt of October 16, 1890, and directing an account to be taken for the purpose of ascertaining the amount due in respect of the legacy of William Means, and that thereupon the complainants are entitled to recover the same. The complainants will recover costs in this court and in the court below, to be paid by the administrators from the funds of the estate.

(78 Fed. 724.)

SIDELL v. MISSOURI PAC. RY. CO. et al.

(Circuit Court of Appeals, Second Circuit. February 23, 1897.)

1. CORPORATIONS—ELECTION OF DIRECTORS—MAJORITY STOCKHOLDERS.
   When the majority of the stockholders of a corporation, combining together, or an individual or corporation holding a controlling interest in the stock, select a body of directors to carry out a predetermined scheme of corporate action, they practically constitute themselves the corporation for that object, and assume the fiduciary relations which the directors themselves occupy; and, if the corporation is insolvent, this trust relation towards creditors forbids the majority stockholders or stockholder from appropriating for their own advantage the property in which all have a community of interest.

2. SAME—RAILROAD COMPANIES—LEASE OF ROAD—LIABILITY OF LESSOR.
   The L. Ry. Co. entered into a contract with the M. Ry. Co. and one L., by which L. was to build the road of the L. Co., and to be paid in bonds, to be issued by the L. Co., and secured by first mortgage of all its property, including rents and profits, and also to be guarantied by the M. Co., which was to acquire a majority of the stock of the L. Co. After the road was built, and the bonds issued, the L. Co. leased the road for 40 years to the M. Co., the lease providing that the annual rent might be paid to the holders of the coupons of the bonds guarantied by the M. Co. At the meeting at which this lease was authorized, the M. Co. voted a majority of the stock of the L. Co. in favor of its execution. Subsequently, complainant, who held a claim against the L. Co. derived from L. under the contract for the construction of the road, upon which he had taken judgment against the L. Co., filed a creditors' bill against the M. Co. to compel it to account for the property of the L. Co. taken by it under the lease. It appeared that the rental value of the property was not equal to the interest on the mortgage, and that the road did not earn expenses. *Held*, that the M. Co. could acquire no benefit, as against creditors of the L. Co., by taking the lease while that company was insolvent, and would be bound to account to complainant for any profits; but, as there were no profits, the bill was properly dismissed.[1]

3. SAME—RENTALS—PAYMENT TO BONDHOLDERS.
   Held, further, that if the M. Co. had been bound to pay rent to the L. Co., a decree for its payment to the complainant would have been appropriate; but, as the rent was directed to be paid to the bondholders, as it lawfully might be, no such decree could be made.

---

[1] See note at end of case.

Digitized by Google

Appeal from the Circuit Court of the United States for the Southern District of New York.

Charles D. Ingersoll and Albert Stickney, for appellant.

Winslow S. Pierce, Rush Taggart, and David D. Duncan, for appellees.

Before WALLACE, LACOMBE, and SHIPMAN, Circuit Judges.

WALLACE, Circuit Judge. This is an appeal from a decree dismissing the bill of complaint. The action was a creditors' suit founded on a judgment recovered in April, 1894, for the sum of $31,925, by the complainant against the Leroy & Caney Valley Railroad Company, and an unsatisfied execution thereon, to reach assets in the hands of the Missouri Pacific Railroad Company, alleged to constitute a trust fund for the benefit of the creditors of the Leroy & Caney Valley Railroad Company. The theory of the bill is that the Missouri Pacific Company, being the principal stockholder and in full control of the Leroy Company, took from the latter, without any new consideration, and with the intention of hindering, delaying, and defrauding its creditors, and especially the complainant, a long lease of its entire property, leaving the company entirely insolvent; that the property was a trust fund for the payment of the debts of the Leroy Company, and the value thereof was largely in excess of the amount of the complainant's judgment; that the Missouri Pacific Company is, therefore, liable in equity to account for the value of the fund; and that, as the complainant is the only creditor of the Leroy Company whose debt remains unpaid, the Missouri Pacific Company should be compelled to pay his judgment in full.

It appears by the proofs that the Leroy Company, a corporation organized under the laws of the state of Kansas, entered into a contract dated October, 7, 1885, with the Missouri Pacific Company, also a corporation of that state, and also with one Loss, by which Loss agreed to build a railroad for the Leroy Company between certain designated places in the state of Kansas, and was to be paid therefor by the delivery to him of the first mortgage bonds to be issued by the Leroy Company and secured by a trust deed conveying all its property; and by which the Missouri Pacific Company was to guaranty the payment of the principal and interest of the bonds, and was to acquire the larger part of the stock of the Leroy Company. The complainant's claim grew out of this contract by mesne assignments from Loss. The railroad was built, the mortgage bonds were created, the Missouri Pacific Company guarantied them, and the bonds were applied as contemplated by the contract. The mortgage securing the bonds guarantied by the Missouri Pacific Company covered not only all the physical property and the franchises of the Leroy Company, but also "all the rents, issues, profits, tolls, or other income" thereof. March 3, 1887, the Leroy Company executed to the Missouri Pacific Company a lease of its railroad, together with all its other property, for the term of 40 years, at a rental of $500 per mile of road annually. The lease provided that the Missouri Pacific Company should pay all taxes on the property, and make all the

Digitized by Google

replacements and repairs. The lease contained the following clause:

"It is agreed that, whereas, the party of the second part has guarantied the payment of interest on certain of the first mortgage bonds of the party of the first part, * * * the party of the second part has the right, instead of paying the rental herein stipulated to be paid directly to the party of the first part, to apply the same to the payment of the coupons on the bonds of the party of the first part as the same become due, and thereby exonerate itself from all liability to pay rent: this right in favor of the party of the second part being one of the considerations on which said guaranty was made."

The rent under the lease was payable semiannually, and at the same time when the semiannual interest upon the bonds would fall due. At the time this lease was executed the Missouri Pacific Company owned and held a majority of the capital stock of the Leroy Company. It voted upon this stock at a corporate meeting of the Leroy Company called to authorize the lease, and by its vote elected the directors who were instructed to cause it to be executed. It took possession of the railroad and all the other leased property under the lease, and has since remained in possession and continued to operate the same.

The proofs justify the inference that the Leroy Company was organized for the purpose of building the railroad as a branch line or feeder to become a part of the system of the Missouri Pacific Company, and that the latter was from the inception of the enterprise a virtual principal. The proofs also show that at the time of the lease the property was not of a rental value equal to the accruing interest upon the outstanding first mortgage bonds. The railroad was doubtless projected and built in the interests of the Missouri Pacific Company with the view of occupying and developing new territory, and in the expectation that at some future time its value as a tributary of the main system would equal or exceed its cost. No evidence was introduced on behalf of the complainant respecting the value of the leased property beyond that supplied by the lease itself. According to the testimony for the defendant, the railroad has been operated by it at a large annual loss, amounting altogether to more than $400,000.

The legal principles applicable to this state of facts are familiar. In a qualified sense, the property of an insolvent corporation is a trust fund for the payment of its creditors. Creditors do not have a specific lien upon the assets any more than they do upon the property of an insolvent individual. If, instead of appropriating them to the payment of its debts, it makes a disposition of them in fraud of creditors, the creditors can reach them, and by proper proceedings acquire a lien upon them, just as they can in the case of an insolvent individual. When insolvency occurs, the directors or managing agents occupy the fiduciary relation towards creditors which they originally sustained towards stockholders. It becomes their duty to preserve the assets, and administer them for the benefit of the creditors. A court of equity will then treat the assets as a trust fund. If they have been distributed among stockholders, or gone into the hands of others than bona

Digitized by Google

fide creditors or purchasers, a court of equity will follow them, and compel them to be applied to the satisfaction of the debts. Curran v. Arkansas, 15 How. 307; Drury v. Cross, 7 Wall. 299; Chicago, M. & St. P. Ry. Co. v. Third Nat. Bank of Chicago, 134 U. S. 276, 287, 10 Sup. Ct. 550; Hollins v. Iron Co., 150 U. S. 371, 14 Sup. Ct. 127; Bartlett v. Drew, 57 N. Y. 587; Lyman v. Bonney, 101 Mass. 562; Goodin v. Canal Co., 18 Ohio St. 169.

When a majority of the stockholders of a corporation combine to effect some predetermined scheme of corporate action, and by their vote select a body of directors to carry it out, they practically constitute themselves the corporation for that particular object, and assume the fiduciary relation which the directors themselves occupy. Ervin v. Navigation Co., 27 Fed. 625; Farmers' Loan & Trust Co. v. New York & N. Ry. Co., 150 N. Y. 410, 44 N. E. 1043. The same result follows when one individual, or a corporation, exercises this control by its majority voice and vote. If the corporation is insolvent, this trust relation towards creditors forbids the majority stockholder from appropriating for his own advantage the property or fund in which all have a community of interest. Jackson v. Ludeling, 21 Wall. 616.

The lease of the Leroy Company, having been of its entire property, denuded the corporation for the term of 40 years of any fund for the payment of its debts except that supplied by the lease itself. Having been procured by the Missouri Pacific Company through its control as a majority stockholder of the Leroy Company, if the Leroy Company was insolvent at the time, the Missouri Pacific Company could acquire no benefit by it to the disadvantage of the creditors of the Leroy Company. Unless it constituted an asset as available and valuable to the creditors as was the original trust fund for which it became a substitute, it was an unlawful disposition of the trust fund for the payment of their debts.

It is conceded that the complainant's judgment represents the only unpaid liability of the Leroy Company existing at the time of the execution of the lease. That being so, if the lease was void as to creditors of the Leroy Company, the complainant was entitled to a decree requiring the Missouri Pacific Company to account for the profits derived by the diversion of the original trust fund from its appropriate purpose, and applying the profits to the payment of the judgment. The court below was not asked to set aside the lease, nor does the bill pray for that relief, because, as was stated upon the argument, such a decree would be of no practical value; the prior mortgage would stand, and the leased property would not be of sufficient value to satisfy its lien. Under such circumstances, if it appeared that there were no profits, the court below properly dismissed the bill.

According to the proofs, there were no profits. The property included in the lease was of no appreciable value above the incumbrances upon it. It was insufficient to satisfy the lien of the mortgage. As a part of the Missouri Pacific system it could not earn expenses, to say nothing of fixed charges. Its value at the time the

Digitized by Google

proofs were taken was fairly described in the statement of one of the witnesses for the defendant, a competent judge of railroad values, and in no wise connected with the defendant, who said, "I take it that the owner of that road would be very glad not to own it." It may be conjectured that at some future time its value may exceed the amount of the incumbrances, but this depends upon many contingencies which cannot be forecast, and a decree would be founded upon mere conjecture.

If there were any obligation on the part of the Missouri Pacific Company as lessee to pay the rent to the Leroy Company, the complainant being the only creditor of the latter corporation, a decree directing payment of the rent towards satisfaction of the judgment would also be appropriate. But there is no such obligation in the lease. Instead, by its terms, the Missouri Pacific Company is at liberty to apply the rental to the payment of interest on the mortgage bonds. It was not unlawful nor inequitable for the two corporations to make provision for that application of the rental. The mortgage, by its terms, gave the holders of the bonds an equitable lien upon the rental for the payment of the interest. The railroad was built with their money. Why were they not entitled to have their interest paid as it fell due? If, incidentally, the Missouri Pacific Company derived a benefit as surety, no one not having higher rights than the bondholders has cause to complain. Certainly the complainant had no equities superior to those of the bondholders. According to the preponderance of authority, in the absence of statutory restrictions an insolvent corporation has the right to prefer one creditor to another in the distribution of its property, the same as has an insolvent individual. Sargent v. Webster, 13 Metc. (Mass.) 497; In re Patent File Co., 6 Ch. App. 83; Catlin v. Bank, 6 Conn. 233; Warner v. Mower, 11 Vt. 385; Coats v. Donnell, 94 N. Y. 168; Wilkinson v. Bauerle, 41 N. J. Eq. 635, 7 Atl. 514; Dabney v. Bank, 3 S. C. 124. If the provision amounted to a preference of the bondholders, it was a legitimate one, and there is no legal theory upon which it can be, in effect, eliminated from the lease, or upon which a decree would be proper directing the Missouri Pacific Company to pay the rental to the complainant.

The case made by the proofs did not entitle the complainant to any substantial relief. The trust fund which he sought to pursue existed only in metaphor. The property of the Leroy Company was of no value to creditors, except the mortgage bondholders, at the time of the lease. The lease did not impair the value of the original fund, nor create a substituted fund of any greater value to creditors who were not bondholders. If it had not been executed, the complainant would be no better off than he is now. "Ex nihilo nihil est."

The decree is affirmed, with costs.

Digitized by Google

NOTE.

Power of Corporation to Assign for Benefit of Creditors, and Right to Prefer Creditors.

1–2. Power to Make an Assignment.
3–4. Right to Prefer Creditors in General.
5–11. —— Statutory Prohibitions.
12–19. —— Securing or Preferring Officers.
20–28. —— Transfers and Preferences by National Banks.

POWER TO ASSIGN FOR BENEFIT OF CREDITORS.

1. It is too well settled to admit of any controversy that a corporation, when it is insolvent, and unable to meet its obligations, may in good faith make an assignment of all its property for the benefit of its creditors, if not prohibited by statute. This power need not be conferred in express terms by its charter, but is always implied in the absence of express restrictions. 5 Thomp. Corp. § 6466 et seq.; State v. Commercial Bank of Manchester, 13 Smedes & M. 569; Chamberlain v. Bromberg, 83 Ala. 576, 3 South. 434; Haxtun v. Bishop, 3 Wend. 13; Vanderpoel v. Gorman, 140 N. Y. 563, 35 N. E. 932; Hopkins v. Turnpike Co., 4 Humph. 403; Reichwald v. Hotel Co., 106 Ill. 439; Shockley v. Fisher, 75 Mo. 498; Hutchinson v. Green, 91 Mo. 367, 1 S. W. 853; Wilkinson v. Bauerle, 41 N. J. Eq. 635, 7 Atl. 515; Tripp v. Bank, 41 Minn. 400, 43 N. W. 60; Marson v. Deither, 49 Minn. 423, 52 N. W. 38; Covert v. Rogers, 38 Mich. 363; Kendall v. Bishop, 76 Mich. 634, 43 N. W. 645; Wright v. Lee, 2 S. D. 596, 51 N. W. 706; Bank v. Shumway, 49 Kan. 224, 30 Pac. 411; Nyman v. Berry, 3 Wash. St. 734, 29 Pac. 557; and cases hereafter cited. The assignment, however, must comply with the laws of the state regulating assignments by insolvent debtors. See Kendall v. Bishop, 76 Mich. 634, 43 N. W. 645. In some jurisdictions an insolvent corporation is prohibited by statute from making an assignment for the benefit of creditors. See Harris v. Thompson, 15 Barb. 62; Robinson v. Bank, 21 N. Y. 406; Sibell v. Remsen, 33 N. Y. 96; Troy Waste Manuf'g Co. v. Saxony Woolen Mills, 4 Misc. Rep. 245, 24 N. Y. Supp. 693. Such a prohibition, however, has been held not to have any extraterritorial effect, and therefore not to apply so as to prevent a corporation chartered by the state in which the law exists, but doing business and owning property in another state, from making an assignment in the latter state, as "they do not go to the organic power of the corporation, but affect only the remedy." Borton v. Brines-Chase Co., 175 Pa. St. 209, 34 Atl. 597.

2. The power of making an assignment for the benefit of creditors is vested in the board of directors, as its governing body, and its validity does not depend upon any assent or ratification by the stockholders. The assignment may be made, in a proper case, even against their expressed dissent. Chamberlain v. Bromberg, 83 Ala. 576, 3 South. 434; Wright v. Lee, 2 S. D. 596, 51 N. W. 706, 714; Chase v. Tuttle, 55 Conn. 455, 12 Atl. 874; Sargent v. Webster, 13 Metc. (Mass.) 497; Vanderpoel v. Gorman, 140 N. Y. 563, 35 N. E. 932; Tripp v. Bank, 41 Minn. 400, 43 N. W. 60; Wilkinson v. Bauerle, 41 N. J. Eq. 635, 7 Atl. 514; Hutchinson v. Green, 91 Mo. 367, 1 S. W. 853. The president of a corporation, without authority from the board of directors, cannot make an assignment. Norton v. Bank, 102 Ala. 420, 14 South. 872. But he may be so authorized by the board of directors, or they may, by ratification, render valid an assignment made without authority. Norton v. Bank, supra; Rogers v. Pell, 89 Hun, 159, 35 N. Y. Supp. 17. In such a case, however, the assignment is effectual only from the time of the ratification, and therefore it has no effect as against an attachment levied after it was made, but before it was ratified. Norton v. Bank, supra; Simon v. Association, 54 Ark. 58, 14 S. W. 1101.

RIGHT TO PREFER CREDITORS IN GENERAL.

3. A number of the courts, holding that the assets of a corporation constitute a trust fund for the benefit of its creditors, and that the trust is for all the creditors, have held that any assignment of its property, in case of in-

Digitized by Google

solvency, must be for the benefit of all the creditors equally, and that the directors, therefore, have no power to prefer certain creditors over others, either in the assignment, or by the execution of a mortgage or conveyance, or by the confession of a judgment; and some of these courts have even gone so far as to avoid a preference, obtained by a creditor by attachment, with knowledge of the company's insolvency. It is so in Ohio: Rouse v. Bank, 46 Ohio St. 493, 22 N. E. 293; Sayler v. Simpson, 46 Ohio St. 510, 24 N. E. 596. And in Tennessee: Tradesman Pub. Co. v. Knoxville Car-Wheel Co., 95 Tenn. 634, 32 S. W. 1097; Levins v. Grocery Co. (Tenn. Ch. App.) 38 S. W. 733; Allison v. Printing Co. (Tenn. Sup.) 37 S. W. 10. And in Texas: Lyons-Thomas Hardware Co. v. Perry Stove Manuf'g Co., 86 Tex. 143, 24 S. W. 16; Harrigan v. Quay (Tex. Civ. App.) 26 S. W. 512; Lyons-Thomas Hardware Co. v. Perry Stove Manuf'g Co., 88 Tex. 468, 27 S. W. 100; Fowler v. Bell (Tex. Sup.) 37 S. W. 1058. And in Washington and Oregon: Thompson v. Lumber Co., 4 Wash. 600, 30 Pac. 741; Holbrook, Merrill & Stetson v. Peters & Miller Co., 8 Wash. 344, 36 Pac. 256; Conover v. Hull, 10 Wash. 673, 39 Pac. 166; Compton v. Schwabacher Bros. & Co. (Wash.) 46 Pac. 338; Biddle Purchasing Co. v. Port Townsend Steel Wire & Nail Co. (Wash.) 48 Pac. 407; Sabin v. Fuel Co., 25 Or. 15, 34 Pac. 692; Id., 35 Pac. 854. And see Haywood v. Lumber Co., 64 Wis. 639, 26 N. W. 184; Bank v. Knowles, 67 Wis. 373, 28 N. W. 225; Ford v. Bank, 87 Wis. 363, 58 N. W. 766. But see, to the contrary, Ballin v. Bank, 89 Wis. 278, 61 N. W. 1118; Ford v. Hill, 92 Wis. 188, 66 N. W. 115. In Allison v. Printing Co. (Tenn. Sup.) 37 S. W. 10, it was held that an excess of liabilities over assets will not alone vitiate a security given by a corporation to a general creditor, so long as the corporation is a going concern; but when such security covers practically all its property, and the effect is to wind up its affairs in such a manner as to secure a preference to the creditor secured, the giving of such security is an overt act of insolvency, and a court of chancery is authorized to set the conveyance aside, and take charge of the assets of the corporation for the equal benefit of all its creditors. The Texas court goes about as far as it is possible to go under this doctrine. In several cases it has there been held that when a corporation becomes insolvent, and has ceased to do business, or, by the act of making a deed of trust, mortgage, or conveyance of its property, terminates its business, with no intention or ability to resume it, it has no power to give preference to one or more of its creditors over others, but its assets become a trust fund in the hands of its directors, to be distributed pro rata among its creditors, to the extent that such assets are not incumbered by valid prior liens; that the rights of all creditors in the fund are by law fixed so soon as the conditions arise out of which the trust relation springs; that, after the trust attaches, neither the corporation nor the trustees can, by any act of theirs, affect the rights of the creditors; and that no creditor can, by any act of diligence on his part, accomplish that which neither the corporation nor trustees could do by agreement with him. As was said by the Texas court: "In such case the trust attaches in favor of creditors, without acceptance by them. If one could secure an advantage by garnishment or attachment over other creditors, the equality of right created by law would be destroyed. Indeed, it would be a remarkable proposition to say that one, by legal process, may appropriate to himself that which belongs equally to him and to others. Shoe Co. v. Thompson (Tex. Sup.) 35 S. W. 473. And see Moon Bros. Carriage Co. v. Waxahachie Grain & Implement Co., Id. 1047. In Moon Bros. Carriage Co. v. Waxahachie Grain & Implement Co. (Tex. Civ. App.) 35 S. W. 337, it was said that while an insolvent corporation holds its assets as a trust fund for the benefit of all its creditors, and cannot by its own act create a preference, such rule does not operate to prevent a creditor from pursuing the remedies given him by statute for the collection of his debt, and he may obtain a valid preference by attachment. This dictum, however, has been overruled by the supreme court cases above referred to, in so far as it may apply to corporations which have ceased to carry on business. But the supreme court sustained the decision so far as to hold that, where an insolvent corporation has not ceased to carry on business in the usual course of trade, its creditors may obtain preferences by attachment. Moon Bros. Carriage Co. v. Waxahachie Grain & Implement Co. (Tex. Sup.) 35 S. W. 1047.

Digitized by Google

4. Very few of the courts recognize the doctrine of these cases, and the overwhelming weight of authority, both in the state and federal courts, is against them, and to the effect that a corporation does not hold its property in trust for its creditors, any more than the property of a natural person or a partnership is held in trust for its creditors, and that, unless prohibited by statute, as in some jurisdictions, it has the same power as a natural person or a firm to prefer particular creditors over others, notwithstanding its insolvency. The right to prefer creditors has been sustained in Michigan: Town v. Bank, 2 Doug. (Mich.) 530; Covert v. Rogers, 38 Mich. 363; Bank of Montreal v. J. E. Potts Salt & Lumber Co., 90 Mich. 345, 51 N. W. 512; Lucas v. Friant (Mich.) 69 N. W. 735. So in Connecticut: Catlin v. Bank, 6 Conn. 233; Smith v. Skeary, 47 Conn. 47. And in Wisconsin: Ballin v. Bank, 89 Wis. 278, 61 N. W. 1118; Ford v. Hill, 92 Wis. 188, 66 N. W. 115. And in Massachusetts: Sargent v. Webster, 13 Metc. (Mass.) 497. In New Jersey: Stratton v. Allen, 16 N. J. Eq. 229; Wilkinson v. Bauerle, 41 N. J. Eq. 635, 7 Atl. 515; Vail v. Jameson, 41 N. J. Eq. 648, 7 Atl. 520. Repeatedly in Illinois: Harts v. Brown, 77 Ill. 226; Reichwald v. Hotel Co., 106 Ill. 439; Glover v. Lee, 140 Ill. 102, 29 N. E. 680; Peterson v. Tailoring Co., 150 Ill. 290, 37 N. E. 242; Warren v. Bank, 149 Ill. 9, 38 N. E. 122; Gottlieb v. Miller, 154 Ill. 44, 39 N. E. 992; Trust Co. v. Smith, 158 Ill. 417, 41 N. E. 1076; Blair v. Steel Co., 159 Ill. 350, 42 N. E. 895; Juillard v. Walker, 54 Ill. App. 517; O'Donnell v. Steel Co., 53 Ill. App. 314. In Maryland: State v. Bank of Maryland, 6 Gill & J. 205. In Iowa: Buell v. Buckingham, 16 Iowa, 284; Hallam v. Hotel Co., 56 Iowa, 178, 9 N. W. 111; Warfield v. Canning Co., 72 Iowa, 666, 34 N. W. 467; Rollins v. Carriage Co., 80 Iowa, 380, 45 N. W. 1037; Garrett v. Plow Co., 70 Iowa, 697, 29 N. W. 395. In Mississippi: Arthur v. Bank, 9 Smedes & M. 394; Palmer v. Grocery Co. (Miss.) 11 South. 789; Sells v. Commission Co., 72 Miss. 590, 17 South. 236; Mason v. Lumber Co. (Miss.) 21 South. 5. In Indiana: Henderson v. Trust Co., 143 Ind. 561, 40 N. E. 516; First Nat. Bank of Crawfordsville v. Dovetail Body & Gear Co., 143 Ind. 550, 40 N. E. 810; Levering v. Bimel (Ind. Sup.) 45 N. E. 775. In Missouri: Foster v. Planing-Mill Co., 92 Mo. 79, 4 S. W. 260; La Grange Butter-Tub Co. v. National Bank of Commerce, 122 Mo. 154, 26 S. W. 710; Waggoner-Gates Milling Co. v. Ziegler-Zaiss Commission Co., 128 Mo. 473, 31 S. W. 28; Schufeldt v. Smith, 131 Mo. 280, 31 S. W. 1039; Slavens v. Drug Co., 128 Mo. 341, 30 S. W. 1025; Alberger v. Bank, 123 Mo. 313, 27 S. W. 657; Meyer v. Chair Co., 130 Mo. 188, 32 S. W. 300. In Pennsylvania: Dana v. Bank, 5 Watts & S. 223; Ashhurst's Appeal, 60 Pa. St. 314; Johnson Co. v. Miller, 174 Pa. St. 605, 34 Atl. 316. In Virginia and West Virginia: Burr's Ex'r v. McDonald, 3 Grat. 215; Bank v. Whittle, 78 Va. 737; Pyles v. Furniture Co., 30 W. Va. 123, 2 S. E. 909. In Arkansas: Ex parte Conway, 4 Ark. 302; Ringo v. Biscoe, 13 Ark. 563; Worthen v. Griffith, 59 Ark. 562, 28 S. W. 286. In Vermont: Warner v. Mower, 11 Vt. 390; Whitwell v. Warner, 20 Vt. 426. In North Carolina: Blalock v. Manufacturing Co., 110 N. C. 99, 14 S. E. 501; Bank v. Cotton Mills, 115 N. C. 507, 20 S. E. 765. In Alabama: Jewelry Co. v. Volfer, 106 Ala. 205, 17 South. 525. In Utah: Wyeth Hardware & Manuf'g Co. v. James-Spencer-Bateman Co. (Utah) 47 Pac. 604. In Wyoming: Conway v. Mercantile Co. (Wyo.) 46 Pac. 1084. In Georgia: Weihl v. Manufacturing Co., 89 Ga. 297, 15 S. E. 282; Milledgeville Banking Co. v. McIntyre Alliance Store (Ga.) 25 S. E. 567. In Nebraska: Shaw v. Robinson & Stokes Co. (Neb.) 69 N. W. 947; Wallachs v. Robinson & Stokes Co. (Neb.) 70 N. W. 52. This doctrine is also recognized in New York, except in so far as preferences are prohibited by statute. Coats v. Donnell, 94 N. Y. 168, 178; Duncomb v. Railroad Co., 84 N. Y. 190, 88 N. Y. 1; French v. Andrews, 81 Hun, 272, 30 N. Y. Supp. 796; Id., 145 N. Y. 441, 40 N. E. 214; McQueen v. New, 10 Misc. Rep. 251, 30 N. Y. Supp. 977. And the doctrine has also been repeatedly recognized and applied in the federal courts. Railroad Co. v. Evans, 14 C. C. A. 116, 66 Fed. 809; Brown v. Furniture Co., 7 C. C. A. 225, 58 Fed. 286; Rickerson Roller-Mill Co. v. Farrell Foundry & Machine Co., 23 C. C. A. 302, 75 Fed. 554; Childs v. Carlstein Co., 76 Fed. 86; Hills v. Furniture Co., 23 Fed. 432; Lippincott v. Carriage Co., 25 Fed. 577; Poole v. Cheese Ass'n, 30 Fed. 513; White, Potter & Paige Manuf'g Co. v. Henry B. Pettes Importing Co., Id. 864; Allis v. Jones, 45 Fed. 148; Gould v. Railway Co., 52 Fed. 680. As was said in Hollins v. Iron Co., 150 U. S. 371, 14 Sup.

Digitized by Google

Ct. 127, the expression, often used, that the property of a corporation constitutes a "trust fund" for its creditors, only means that when the corporation is insolvent, and a court of equity has possession of its assets for administration, such assets must be appropriated to the payment of its debts before any distribution to the stockholders; but, as between a corporation itself and its creditors, the former does not hold its property in trust, or subject to a lien in favor of the creditors, in any other sense than does an individual debtor. Where this doctrine is recognized it can, of course, make no difference that the creditor securing a preference knows that the corporation is insolvent. White, Potter & Paige Manuf'g Co. v. Henry B. Pettes Importing Co., 30 Fed. 864, and most of the other cases cited in the preceding section.

SAME—STATUTORY PROHIBITIONS.

5. In New York it is provided by statute, in effect, that, whenever a corporation shall have refused payment of a debt, it shall not be lawful for it, or any of its officers, to assign or transfer any of its property or choses in action to any of its officers or stockholders, directly or indirectly, for the payment of any debt; and it shall not be lawful to make any transfer or assignment in contemplation of insolvency to any person or persons whatever. See Salt v. Ensign, 79 Hun, 107, 29 N. Y. Supp. 659; Baker v. Emerson, 4 App. Div. 348, 38 N. Y. Supp. 576. Insolvency of a corporation, within this provision, is shown, where there is a general inability to pay obligations when they become due in the regular course of business. French v. Andrews, 81 Hun, 272, 30 N. Y. Supp. 796. See Baker v. Emerson, 4 App. Div. 348, 38 N. Y. Supp. 576.

6. Under a statute prohibiting conveyances and transfers of property by an insolvent corporation, or by a corporation in contemplation of insolvency, with intent to give a preference to a particular creditor, the intent to give a preference, and either an actual insolvency, or a contemplation of insolvency, must be proved, in order to avoid a conveyance. So long, it has been held, as a debtor corporation, notwithstanding the pressure of great embarrassments, entertains an honest expectation, in the exercise of a reasonable intelligence, of going on with its business, and paying all of its debts, its conveyances and transfers to particular creditors, to pay or secure their claims, do not come within the operation of the statute. Curtis v. Leavitt, 15 N. Y. 9, 198.

7. This statute puts no restraint whatever upon the creditors of a corporation, but merely prohibits affirmative action by the corporation or its officers. For this reason, where creditors of a corporation, knowing it to be insolvent, arranged with an officer of the corporation that he should not disclose service of summons on him, and afterwards obtained a judgment by default against the corporation, and sold its property on execution, it was held that there was no violation of the statute. Varnum v. Hart, 119 N. Y. 101, 23 N. E. 183. No duty rests on the officers of an insolvent corporation to defend an action brought against it by a creditor, to which there is no valid defense, for the purpose of preventing such creditor from obtaining a preference, and a failure to defend will not render the judgment in such action impeachable as an illegal preference. Ridgway v. Symons, 4 App. Div. 98, 38 N. Y. Supp. 895. In French v. Andrews, 145 N. Y. 441, 40 N. E. 214, it was held that an insolvent corporation does not violate the statute, forbidding any transfer or assignment of its property in contemplation of insolvency, by giving a creditor, not an officer or stockholder, fractional notes payable on demand, in place of a note not due, so as to enable the creditor to immediately proceed on each note, in a court of limited jurisdiction, where judgments can be obtained immediately by default, so that executions may be issued before a receiver is appointed.

8. In Milbank v. De Riesthal, 82 Hun, 537, 31 N. Y. Supp. 522, it was said by Justice Parker: "The mere fact that the officers of the corporation do not oppose the creditor in his effort to get the judgment, but remain passive, is not alone sufficient to require the inference that the judgment was suffered with the intent of giving such creditor a preference. But the inference may be supported on additional evidence of an affirmative character, tending to show the existence of such a desire on the part of the officers of the corporation having knowledge of the situation. Evidence tending to prove such a desire on the part of the officers may consist of acts done or words spoken under such circumstances as manifest a wish or plan to effectuate a preference in behalf of the prosecuting creditor." In Olney v. Baird, 15 Misc. Rep.

Digitized by Google

385, 37 N. Y. Supp. 815, it was held that, under the statute providing that no conveyance of property by such a corporation, or any officer thereof, nor any judgment "suffered by it or any officer" when it is insolvent, or its insolvency is imminent, with intent to give a preference, shall be valid, property of an insolvent corporation, acquired by a creditor through a judgment in another state, must be accounted for by him for the benefit of creditors in general, the secretary of the corporation having, at the expense of the creditor, gone into the other state, to enable the creditor to get service on the corporation, and papers in the suit having been left by the secretary with a lawyer whose services were paid for by the creditor.

9. It has been held by the court of appeals of New York in a late case that a statute prohibiting transfers and assignments by corporations, when they are insolvent, does not apply to foreign corporations, unless they are expressly mentioned, or included by necessary implication. In New York the statute declares it unlawful for "any incorporated company to make any transfer or assignment in contemplation of insolvency." In Vanderpoel v. Gorman, 3 Misc. Rep. 57, 22 N. Y. Supp. 541, it was contended that this provision applied only to assignments by domestic corporations. The contention was overruled, but on appeal the decision was reversed, and it was held that the statute did not apply to foreign corporations, and that a foreign corporation having authority under the law of its domicile to make an assignment could do so in New York. 140 N. Y. 563, 35 N. E. 932. And see McQueen v. New, 10 Misc. Rep. 251, 30 N. Y. Supp. 977. The supreme court of Texas, in a well-reasoned decision, has reached a contrary conclusion. In that state it is held, independently of any statute, that an insolvent corporation, which has ceased to do business, has no power to convey any of its property so as to prefer any of its creditors. And in Fowler v. Bell (Tex. Sup.) 37 S. W. 1058, it was held that a chattel mortgage executed in Iowa by a corporation created by the laws of that state, but doing business in Texas, in contemplation of insolvency, and covering property located in Texas, could not be enforced in Texas, though valid by the laws of Iowa. The ground upon which this decision was based is sound. It is that the laws of Iowa in this respect are contrary to the public policy of the state of Texas, and therefore cannot have effect there.

10. It has been held that a statute prohibiting insolvent corporations from making preferences does not have any extraterritorial effect, so as to follow a corporation created by the laws of the state having such a statute into another state, where it is doing business and owns property, and to avoid a preference there given by it. Thus in Borton v. Brines-Chase Co., 175 Pa. St. 209, 34 Atl. 597, it was held that a general assignment or confession of judgment might be made in Pennsylvania by an insolvent New Jersey corporation, though the laws of New Jersey prohibited it. "In our opinion," said Judge Thayer, whose opinion was adopted by the supreme court, "the acts in question are of local application, and have no extraterritorial effect. They do not go to the organic power of the corporation, but affect only the remedy; and under the authority of Pairpoint Manuf'g Co. v. Philadelphia Optical & Watch Co., 161 Pa. St. 17, 28 Atl. 1003, and East Side Bank v. Columbus Tanning Co., 170 Pa. St. 1, 32 Atl. 539, we hold that they do not operate to control the action of the corporation in the distribution of property in this state, made in accordance with the laws thereof."

11. In many states it is provided, in effect, that all assignments in trust, made in contemplation of insolvency, with the intent to prefer one or more creditors, shall inure to the equal benefit of all. Such a provision is not limited to individual debtors, but applies to assignments by corporations also. Generally, the statutes expressly include corporations. Under such a provision as this, mortgages made by a corporation after it has become insolvent, and ceased to do business, to prefer one or more of its creditors, are invalid as against the creditors generally, without regard to the question whether the mortgages were or were not parts of the same transaction, as an assignment under the statute. Rouse v. Bank, 46 Ohio St. 493, 22 N. E. 293; Purifier Co. v. McGroarty, 136 U. S. 237, 10 Sup. Ct. 1017.

SAME—SECURING OR PREFERRING OFFICERS.

12. When a corporation becomes insolvent, and ceases to do business, or contemplates cessation of business, the generally recognized rule is that the di-

Digitized by Google

rectors or other officers having charge of its assets, or even stockholders, it seems, cannot, by conveyance, mortgage, transfer, or otherwise, even where there is no express statutory prohibition, secure to themselves any preference or advantage over other creditors. It seems to be otherwise in England. Poole, Jackson, & Whyte's Case, 9 Ch. Div. 322. But the rule stated is well settled in most jurisdictions in this country. And the fact that there is no actual fraudulent intent is immaterial. See, in the federal courts, Koehler v. Iron Co., 2 Black, 715; Manufacturing Co. v. Hutchinson, 11 C. C. A. 320, 63 Fed. 496; Bosworth v. Bank, 12 C. C. A. 331, 64 Fed. 615; Bradley v. Farwell, Fed. Cas. No. 1,779; Corbett v. Woodward, Id. 3,223; Coons v. Tome, 9 Fed. 532; Lippincott v. Carriage Co., 25 Fed. 577; Sprague-Brimmer Manuf'g Co. v. M. J. Murphy Furnishing Goods Co., 26 Fed. 572; White, Potter & Paige Manuf'g Co. v. Henry B. Pettes Importing Co., 30 Fed. 864; Adams v. Milling Co., 35 Fed. 433; Howe v. Tool Co., 44 Fed. 231; Consolidated Tank-Line Co. v. Kansas City Varnish Co., 45 Fed. 7; Wisconsin Marine & Fire Ins. Co.'s Bank v. Lehigh & F. Coal Co., 64 Fed. 497; Northwestern Mut. Life Ins. Co. v. Cotton Exchange Real Estate Co., 70 Fed. 155. In Illinois: Beach v. Miller, 130 Ill. 162, 22 N. E. 464; Roseboom v. Whittaker, 132 Ill. 81, 23 N. E. 339; Paper Co. v. Robbins, 151 Ill. 588, 38 N. E. 153; Atwater v. Bank, 152 Ill. 605, 38 N. E. 1017. In New Jersey: Wilkinson v. Bauerle, 41 N. J. Eq. 635, 7 Atl. 514; Montgomery v. Phillips, 53 N. J. Eq. 203, 31 Atl. 622; Krause v. Glass Co. (N. J. Ch.) 18 Atl. 367; Mallory v. Kirkpatrick (N. J. Ch.) 33 Atl. 205; Savage v. Miller (N. J. Ch.) 36 Atl. 578. In Pennsylvania: Sicardi v. Oil Co., 149 Pa. St. 148, 24 Atl. 163. In Rhode Island: Olney v. Land Co., 16 R. I. 597, 18 Atl. 181. In Louisiana: Cahill v. Refrigerating Co., 47 La. Ann. 1483, 17 South. 784. In Alabama: Corey v. Wadsworth, 99 Ala. 68, 11 South. 350; Gibson v. Furniture Co., 96 Ala. 357, 11 South. 365; Goodyear Rubber Co. v. George D. Scott Co., 96 Ala. 439, 11 South. 370. In Georgia: Lowry Banking Co. v. Empire Lumber Co., 91 Ga. 624, 17 S. E. 968. In Mississippi: Love Manuf'g Co. v. Queen City Manuf'g Co. (Miss.) 20 South. 146. In Kansas: Hayes v. Bank, 51 Kan. 535, 33 Pac. 318; Bridge Co. v. Fowler, 55 Kan. 17, 39 Pac. 727. In Wisconsin: Haywood v. Lumber Co., 64 Wis. 639, 26 N. W. 184. In Nebraska: Ingwersen v. Edgecombe, 42 Neb. 740, 60 N. W. 1032; Tillson v. Downing, 45 Neb. 549, 63 N. W. 836. In North Carolina: Hill v. Lumber Co., 113 N. C. 173, 18 S. E. 107. In New Hampshire: Richards v. Insurance Co., 43 N. H. 263. In Arkansas: Worthen v. Griffith, 59 Ark. 562, 28 S. W. 286. In Missouri: Williams v. Jackson Co. Patrons of Husbandry, 23 Mo. App. 132; Mill Co. v. Kampe, 38 Mo. App. 229; Roan v. Winn, 93 Mo. 503, 4 S. W. 736. In California: Bonney v. Tilley, 109 Cal. 346, 42 Pac. 439. In Utah: W. P. Noble Mercantile Co. v. Mt. Pleasant Equitable Co-operative Inst., 12 Utah, 213, 42 Pac. 869. In South Dakota: Adams & Westlake Co. v. Deyette (S. D.) 65 N. W. 471. But see, contra, as to stockholders who are not officers, Parsons v. Hatton-Snowden Co., 58 Ill. App. 272. In Mallory v. Kirkpatrick (N. J. Ch.) 33 Atl. 205, the president of a corporation in an insolvent condition, who was also its creditor to a large amount for cash advanced, brought suit against it on one day, resigned as president and director the next day, and on the third day the directors accepted his resignation, and authorized an attorney to give a cognovit, upon which judgment was at once entered. It was held, that he could not have a preference by virtue of the judgment.

13. Some of the courts have held such preferences only prima facie fraudulent and void. See Hulings v. Lumber Co., 38 W. Va. 351, 18 S. E. 620; Schufeldt v. Smith, 131 Mo. 280, 31 S. W. 1039; Garrett v. Plow Co., 70 Iowa, 697, 29 N. W. 395; West v. Produce Co., 6 Colo. App. 467, 41 Pac. 829; Brown v. Furniture Co., 7 C. C. A. 225, 58 Fed. 286; Rickerson Roller-Mill Co. v. Farrell Foundry & Machine Co., 23 C. C. A. 302, 75 Fed. 554; Childs v. Carlstein Co., 76 Fed. 86. These courts, however, require the utmost good faith on the part of the officers securing preferences. In Rickerson Roller-Mill Co. v. Farrell Foundry & Machine Co., 23 C. C. A. 302, 75 Fed. 554, it was held that while the mere insolvency of a corporation does not, either under general principles of law or the law of Michigan, render invalid a preference given, while insolvent, to its directors, who are also creditors of the corporation, yet, to sustain such a preference, the utmost good faith must appear, not only

Digitized by Google

in respect to the bona fides of the debt paid, but in respect to all the steps taken to secure the preference. And it was therefore held that, where three directors, who constituted a majority of the board, and whose votes were necessary to the action taken, transferred to themselves, in payment of an antecedent debt, all the available assets of the corporation, though they had previously assured a creditor that his claim should be paid before that of the directors, the preference so obtained by the directors was invalid, and the assets so transferred to the directors should be ratably distributed among all the creditors of the corporation.

14. Some of the courts have based the doctrine that the officers of an insolvent corporation cannot secure any preference or advantage over other creditors on the ground that the officers of a corporation are trustees for the creditors. But this is not true in the strict sense. Others base it on the ground that, while they are not trustees in the strict sense, they stand in a confidential relation to creditors, and are quasi trustees. Others more properly put the rule on the ground simply that for the officers to thus secure or pay themselves in preference to the other creditors is fraudulent as to them. In Howe v. Tool Co., 44 Fed. 231, Judge Woods said: "A sound public policy and a sense of common fairness forbid that the directors or managing agents of a business corporation, when disaster has befallen or threatens the enterprise, shall be permitted to convert their powers of management and their intimate, and it may be, exclusive, knowledge of the corporate affairs into means of self-protection, to the harm of other creditors. They ought not to be competitors in a contest of which they must be the judges. The necessity for this limitation upon the right to give preferences among creditors, when asserted by a corporation, may not have been perceived in earlier times, but the growing importance and variety of modern corporate enterprises and interests I think will compel its recognition and adoption. * * * Whether or not such preferences are fairly given is an impracticable inquiry; because there can be, in ordinary cases, no means of discovering the truth, and consequently the presumption to the contrary should in every case be conclusive. Concede that it is a question of proof, and that a preference in favor of a director will be deemed valid if fairly given, and it may as well be declared to be a part of the law of corporations that, in cases of insolvency, debts to directors, and liabilities in which they have a special interest, may first be discharged. That will be the practical effect, and the examples will multiply of individual enterprises prosecuted under the guise of corporate organizations for the purpose, not only of escaping the ordinary risks of business done in the owner's name, which may be legitimate enough, but of enabling the promoters and managers, when failure comes, to appropriate the remains of the wreck by declaring themselves favored creditors. Besides inconsistency with that equality which equity loves, such favors involve too many possibilities of dishonesty and successful fraud to be tolerated in an enlightened system of jurisprudence."

15. This doctrine has been applied in avoidance of preferences given by officers of an insolvent corporation to their relatives, Adams v. Milling Co., 35 Fed. 433; Paper Co. v. Robbins, 151 Ill. 588, 38 N. E. 153; Savage v. Miller (N. J. Ch.) 36 Atl. 578; or to firms in which they are members, Bradley v. Farwell, Fed. Cas. No. 1,779; Jones v. Blum, 145 N. Y. 333, 39 N. E. 954; or other corporations in which they are also officers and the principal stockholders, Manufacturing Co. v. Hutchinson, 11 C. C. A. 320, 63 Fed. 496; Savage v. Miller (N. J. Ch.) 36 Atl. 578. But see Sells v. Commission Co., 72 Miss. 590, 17 South. 236. It has also been applied in avoidance of conveyances by officers or confessions of judgment in payment of debts upon which they were liable as guarantors, indorsers, or sureties. Goodyear Rubber Co. v. George D. Scott Co., 96 Ala. 439, 11 South. 370; Savage v. Miller (N. J. Ch.) 36 Atl. 578; Richards v. Insurance Co., 43 N. H. 263; Sprague-Brimmer Manuf'g Co. v. M. J. Murphy Furnishing Goods Co., 26 Fed. 572; Howe v. Tool Co., 44 Fed. 231; Lippincott v. Carriage Co., 25 Fed. 577; Wisconsin Marine & Fire Ins. Co.'s Bank v. Lehigh & F. Coal Co., 64 Fed. 497; Bosworth v. Bank, 12 C. C. A. 331, 64 Fed. 615; Lowry Banking Co. v. Empire Lumber Co., 91 Ga. 624, 17 S. E. 968 (but see cases infra); Tillson v. Downing, 45 Neb. 549, 63 N. W. 836; Olney v. Land Co., 16 R. I. 597, 18 Atl. 181; Love Manuf'g Co. v. Queen City Manuf'g Co. (Miss.) 20 South. 146. By the better opinion,

Digitized by Google

however, if not by the weight of authority, bona fide creditors of an insolvent or failing corporation, who are not stockholders or directors therein, are not debarred from taking security for their claims, because the paper held by such creditors is indorsed or guarantied by some of the directors individually or because they are sureties. Waggoner-Gates Milling Co. v. Ziegler-Zaiss Commission Co., 128 Mo. 473, 31 S. W. 28; Henderson v. Trust Co., 143 Ind. 561, 40 N. E. 516; Levering v. Bimel (Ind. Sup.) 45 N. E. 775; Worthen v. Griffith, 59 Ark. 562, 28 S. W. 286; Lucas v. Friant (Mich.) 69 N. W. 735; West v. Produce Co., 6 Colo. App. 467, 41 Pac. 829; Blair v. Steel Co., 159 Ill. 350, 42 N. E. 895. And see Sanford Fork & Tool Co. v. Howe, Brown & Co., 157 U. S. 312, 15 Sup. Ct. 623; Weihl, Probasco & Co. v. Atlanta Furniture Manuf'g Co., 89 Ga. 297, 15 S. E. 282; Milledgeville Banking Co. v. McIntyre Alliance Store (Ga.) 25 S. E. 567. The rule has also been applied by preferences to creditors holding their claims by assignment from officers of the corporation. Gottlieb v. Miller, 154 Ill. 44, 39 N. E. 992; Bank v. Townley, 92 Hun, 172, 38 N. Y. Supp. 584.

16. A director who has secured a preference over other creditors after the corporation became insolvent cannot claim to have acted in ignorance of its condition, as this would allow him to plead ignorance of what it was his duty to know. Corbett v. Woodward, Fed. Cas. No. 3,223.

17. The rule is not limited to conveyances and mortgages to officers to pay or secure their debts, but applies to preferences secured in other ways, as, for example, by confession of judgment. In Roseboom v. Whittaker, 132 Ill. 81, 23 N. E. 339, a majority of the directors of a corporation, knowing it to be insolvent, voted for the execution to them of the judgment note of the corporation, and, when it was executed by one of their number as treasurer, judgment was immediately entered on it. It was held that the judgment was void as to other creditors of the corporation, though the note was given in payment of a bona fide debt. For other cases of confession of judgment in favor of an officer, see Coons v. Tome, 9 Fed. 533; Sprague-Brimmer Manuf'g Co. v. M. J. Murphy Furnishing Goods Co., 26 Fed. 572; Hill v. Lumber Co., 113 N. C. 173, 18 S. E. 107.

18. In New York it is expressly provided by statute that, whenever a corporation shall have refused payment of a debt, it shall not be lawful for it, or any of its officers, to assign or transfer any of its property or choses in action to any of its officers or stockholders. This provision, it has been held, prohibits any officer of an insolvent corporation to whom it is indebted from obtaining a preference over other creditors in any manner whatever, whether by transfer from the corporation or by attachment of its property. In Throop v. Lithographic Co., 125 N. Y. 530, 26 N. E. 742, it was held (Earl, Peckham, and Gray, JJ., dissenting) that the statute rendered void an attachment against an insolvent corporation by a creditor, who was also one of its directors, though he had no control over any of its assets, and though the proceeding was strictly hostile as between him and the corporation. The statute prohibits a transfer to a partnership of which one of the directors of the corporation is a member. Jones v. Blun, 145 N. Y. 333, 39 N. E. 954. The statute, it has been held, also renders void a judgment obtained by the wife of an officer of a corporation on claims of his against it, assigned to her by him at a time when its insolvency was known to both of them. Bank v. Townley, 92 Hun, 172, 38 N. Y. Supp. 584.

19. It must not be supposed, however, that every conveyance or transfer by a corporation to an officer in payment of, or as security for, a debt is void as a preference, within the meaning of this doctrine. An insolvent corporation cannot pay or secure its officers for past indebtedness, in preference of other creditors. But it is not precluded from dealing with its officers; and if a corporation procures a loan from its directors, or on their indorsement, while it is a going concern, and not in contemplation of insolvency, it may secure them, though it may in fact not have assets to meet its indebtedness. In Sanford Fork & Tool Co. v. Howe, Brown & Co., 157 U. S. 312, 15 Sup. Ct. 621 (reversing Howe v. Tool Co., 44 Fed. 231), it was held that a mortgage given by a corporation, while it is a going concern, though not having property sufficient at the market price to pay its debts, but while all concerned expect and intend that it shall continue, and believe that its continuance will bring financial success, though

Digitized by Google

given to its directors, who are sureties on its notes, to secure them on account thereof, and to induce them to procure renewals or extensions of the notes, and to procure further advances of credit, is not invalid as to creditors of the corporation.

SAME—TRANSFERS AND PREFERENCES BY NATIONAL BANKS.

20. The national bank act, after requiring a ratable distribution of the assets of an insolvent national bank among all the creditors, provides (Rev. St. U. S. § 5242) as follows: "All transfers of the notes, bonds, bills of exchange, or other evidences of debt owing to any national banking association, or of deposits to its credit; all assignments of mortgages, sureties on real estate, or of judgments or decrees in its favor; all deposits of money, bullion, or other valuable thing for its use, or for the use of any of its shareholders or creditors; and all payments of money to either, made after the commission of an act of insolvency, or in contemplation thereof,—made with a view to prevent the application of its assets in the manner prescribed by this chapter, or with a view to the preference of one creditor to another, except in payment of its circulating notes,—shall be utterly null and void."

21. Under this provision, the transfer or payment by a national bank, to be void, must be made either (1) after the commission of an act of insolvency, or (2) in contemplation thereof. In re Armstrong, 41 Fed. 381; Bank v. Price, 22 Fed. 697, affirmed Bank v. Butler, 129 U. S. 223, 9 Sup. Ct. 281. In Price v. Coleman, 22 Fed. 694, it appeared that the Pacific National Bank, of Boston, suspended November 18, 1881, but after examination resumed March 18, 1882, with the consent of the comptroller of the currency, and continued to transact business until May 22, 1882, when it again failed. Between March 24, 1882, and April 28, 1882, certain creditors, whose claims had been disputed and placed in a suspense account, attached the property of the bank, whereupon the bank gave bond, with the president and a director as sureties, and the attachments were dissolved. The bank transferred to the sureties, March 22, 1882, a certificate of deposit for $100,000 on another bank, which, on April 13, 1882, was exchanged for other property. It was held that such transfer was not made after the commission of an act of insolvency by the bank, or in contemplation thereof, and with a view to a preference or to prevent the application of the assets as prescribed by the banking act. It is not necessary that a receiver shall have been appointed before the transfer or payment is made. It is enough, to render it void, that it is made after the managing officers have determined to go into liquidation. Bank v. Price, 22 Fed. 697, affirmed sub nom. Bank v. Butler, 129 U. S. 223, 9 Sup. Ct. 281. And it is void, even though the officers have not determined to go into liquidation, if the condition of the bank is such as to make it reasonably apparent to them that it will presently be unable to meet its debts, and will have to suspend its ordinary operations. And it can make no difference in such a case that the payment is made to postpone failure. Roberts v. Hill, 24 Fed. 571.

22. In Roberts v. Hill, 23 Fed. 311, Judge Wheeler held that if the officers of a national bank, at the time of pledging a note to secure a depositor who had been allowing the bank to use his money, and was apprehensive of a loss thereof, had seen that the bank was approaching failure, and had made the pledge to keep the note out of the assets to be distributed, the pledge would have been void; but as they made it to prevent failure, and expecting to prevent failure, by retaining and using the deposit to pay other depositors, it was good. On rehearing before Judges Wallace and Wheeler, this decision was overruled, and it was held that where the officers of a bank have reason to know that the bank will presently be unable to meet its obligations, and will be obliged to suspend, any transfer having the effect of preferring a depositor is void, though the transfer is made to prevent paying the depositor the amount due him, and thus postpone the failure of the bank. 24 Fed. 571.

23. To come within this section, the transfer or payment must also be made by the bank or its officers "with a view" to prevent the application of its assets in the manner prescribed by the other sections relating to insolvent national banks, or "with a view" to the preference of one creditor to another, except in payment of its circulating notes. Bank v. Price, 22 Fed. 697, affirmed Bank v. Butler, 129 U. S. 223, 9 Sup. Ct. 281; In re Armstrong, 41 Fed. 381. It is not necessary, however, to show an actual intent on the part of the

Digitized by Google

bank or its officers to prevent the proper application of its assets, or to prefer a particular creditor. If the act done can have no other than such effect, the intent will be presumed, as a matter of law, on the principle that a person is presumed to intend the necessary consequences of his acts, and no evidence will be admitted to show that there was in fact no such intent. Bank v. Price, 22 Fed. 697, s. c. nom. Bank v. Butler, 129 U. S. 223, 9 Sup. Ct. 281. In this case it appeared that the Pacific Bank of Boston, not being a member of the clearing house, used to deposit with the Security Bank all checks received by it to be collected through the clearing house, and was credited by the latter bank as a depositor. The directors of the Pacific Bank, having, one Saturday after closing, determined to go into liquidation, dispatched a committee to Washington to confer with the comptroller of the currency as to the appointment of a receiver. The appointment was made about 10 a. m. on Monday. Monday morning the cashier of the Pacific Bank sent the checks and drafts received by mail to the Security Bank, and with them his check for the whole amount of the bank's deposit, for which he received a negotiable certificate of deposit of the Security Bank. The latter at the time held the Pacific Bank's negotiable certificate of deposit. The transaction occurred about 9:30 a. m., when no officer of the Security Bank knew or suspected that the Pacific Bank was insolvent. It was held that the cashier must have presumed that the Security Bank still held its certificate of deposit, and that in sending to it the checks and drafts he was making a transfer which could have no other result than to prefer, and that the court, therefore, correctly held as a matter of law that the preference was void. See, also, Silverman's Case, Fed. Cas. No. 12,855; Sawyer v. Turpin, Id. 12,410; Roberts v. Hill, 24 Fed. 571.

24. The statute, it has been held, is directed against preferences, and does not prevent the bank from giving security at the time a debt is created; and therefore, if the transaction is free from fraud in fact, and a transfer of property by a bank is intended merely to secure a loan made at the time of the transfer, the creditor can retain the property until the debt is paid, though the bank may have been insolvent at the time of the transaction, and though the creditor may have had reason to know its condition. Armstrong v. Bank, 41 Fed. 234.

25. The statute not only prevents the officers of an insolvent bank from preferring creditors by a conveyance, transfer, or payment to them, but it prevents a creditor from obtaining a preference by adversary proceedings against the bank, as by attachment. "The scheme of the act, of which this section is one of the provisions, contemplates a ratable distribution of the assets of national banks among their creditors in the event of insolvency; and the intention of congress, to secure equality among creditors by the appropriation of all the assets of an insolvent bank for a ratable division, is so dominating that the courts have held that a creditor cannot obtain a preference by adversary proceedings against the bank after insolvency has taken place. Accordingly it has been adjudged that a creditor cannot acquire a lien upon the property of a national bank, after it has become insolvent, by a suit and an attachment of its property, although no receiver has been appointed; and that the attachment should be vacated upon the application of a receiver subsequently appointed, because it would be subversive of the theory of the national currency act to permit the creditor to obtain a preference thereby over the other creditors of the bank." Roberts v. Hill, 24 Fed. 571, 572.

26. It has been held that, to make a payment or transfer void under this section, it is only necessary that the insolvency be in the contemplation of the bank, or its officers. It need not also be known to or contemplated by the creditor to whom the transfer or payment is made. Case v. Bank, Fed. Cas. No. 2,489. See Bank v. Butler, 129 U. S. 223, 9 Sup. Ct. 281 (ante, § 23). But this, as a broad proposition, is more than doubtful, and there are decisions to the contrary. In Roberts v. Hill, 24 Fed. 571, 574, Judge Wallace expressed disapproval of Case v. Bank, supra. "A case may be supposed," he said, "where a bank is hopelessly insolvent, and is known to be so by its officers, and when any payment made by it will, as they know, necessarily result in a preference to the person receiving it; and yet, if made in the ordinary course of business, as, for instance, to a customer, who, in ignorance of the condition of the bank, continues his dealings and makes daily deposits, and draws out checks daily, it would be extremely inequitable to compel the latter to pay it

Digitized by Google

back. Under such circumstances, the bank or its creditors would receive the benefits of his deposits, while he would be compelled to repay what he had drawn out innocently, and in the usual course of business. It would be a harsh statute which would compel a creditor or depositor, under such circumstances, to yield up the payments he received in good faith. A construction which would give such an effect to this statute ought not to be indulged, in the absence of clear and explicit language requiring it." In Bank v. Butler, supra, the creditor preferred did not know of the insolvency of the bank, and yet the preference was held void. But it is to be noted that the preference was made after the officers of the bank had determined formally to go into liquidation, and only a few hours before a receiver was actually appointed. In the state courts there have been decisions, in accordance with the dictum of Judge Wallace in Roberts v. Hill, supra, that knowledge by officers of a bank of its insolvency does not avoid payments in the ordinary course of business to creditors who act in good faith and without such knowledge. In Hayes v. Beardsley, 136 N. Y. 299, 32 N. E. 855, it was held by the New York court of appeals that payment of a certificate of deposit by an insolvent national bank more than six weeks before its suspension, and at a time when it was in apparent good standing, and its insolvency known only to its cashier, who fraudulently concealed it, and where there was no evidence to show an intent on the part of the cashier to give a preference to the depositor, was not void under the national banking act. Such seems also to be the logical consequence of the decision of the supreme court of the United States in Scott v. Armstrong, 146 U. S. 499, 13 Sup. Ct. 148.

27. The national banking act (Rev. St. U. S. §§ 5234, 5236, 5242), in requiring a pro rata distribution of the assets of a national bank and forbidding preferences, does not invalidate liens, equities, and rights arising prior to and not in contemplation of insolvency. Scott v. Armstrong, 146 U. S. 499, 13 Sup. Ct. 148. In this case a promissory note was executed to a national bank in consideration of the amount being placed to the credit of the maker on the books of the bank. The maker thought, and had good reason for thinking, that the bank was solvent, but the managing officer of the bank knew it to be insolvent. Before the note matured the charter was forfeited for insolvency and a receiver appointed. Under these circumstances, it was held that the undrawn balance to the credit of the maker of the note should be allowed as an equitable set-off to the note, and that such an allowance was not a forbidden preference. Reversing 36 Fed. 63. "Undoubtedly," said Chief Justice Fuller, "any disposition by a national bank, being insolvent or in contemplation of insolvency, of its choses in action, securities, or other assets, made to prevent their application to the payment of its circulating notes, or to prefer one creditor to another, is forbidden; but liens, equities, or rights arising by express agreement, or implied from the nature of the dealings between the parties, or by operation of law, prior to insolvency and not in contemplation thereof, are not invalidated. The provisions of the act are not directed against all liens, securities, pledges, or equities whereby one creditor may obtain a greater payment than another, but against those given or arising after or in contemplation of insolvency. Where a set-off is otherwise valid, it is not perceived how its allowance can be considered a preference, and it is clear that it is only the balance, if any, after the set-off is deducted, which can justly be held to form part of the assets of the insolvent. The requirement as to ratable dividends is to make them from what belongs to the bank, and that which at the time of the insolvency belongs of right to the debtor does not belong to the bank." And see Louis Snyders' Sons Co. v. Armstrong, 37 Fed. 18; Yardley v. Clothier, 49 Fed. 337. Compare O'Brien v. Grant, 83 Hun, 610, 32 N. Y. Supp. 498.

28. The statute does not apply to transfers by a bank of evidences of debt in its possession, which are not part of its assets, but the property of another. It was therefore held in Bank v. Johnston, 97 Ala. 655, 11 South. 690, that notes given to a national bank in renewal of other notes, which were to be given up, but which had previously been transferred by the bank, so that they could not be given up, were not "evidences of debt" or "assets," within the meaning of the statute, as they could not become the property of the bank until surrender of the old notes.

WM. LAWRENCE CLARK, JR.

Washington, D. C.

Digitized by Google

(78 Fed. 554.)

HAZZARD v. FITZHUGH et al.[1]

(Circuit Court of Appeals, Fifth Circuit. December 8, 1896.)

No. 490.

MORTGAGE OF HOMESTEAD—COLORABLE CONVEYANCE—FORECLOSURE—ACTION FOR POSSESSION—BILL TO ENJOIN—INNOCENT PURCHASER.

A husband and wife, colorably and for the purpose of borrowing money thereon, conveyed, by deed absolute, their homestead to a third person, for a recited consideration, part in cash and part in a purchase-money note; at the same time making affidavit that the sale was bona fide. No cash passed; but the note, by previous arrangement, was taken by a mortgage company, which paid the amount to be loaned directly to the husband, the grantee of the land giving it a deed of trust to secure the same. The note, guarantied by the mortgage company, was sold by it to defendant, an innocent purchaser for value, without notice, who, after maturity of the note, caused the property to be sold under the trust deed, and bought it in for less than the sum due. Defendant then brought an action at law to recover possession of the land from the husband and wife, who had remained in possession, whereupon they filed this bill in equity to enjoin the prosecution of such action. *Held*, that the injunction must be denied, the case being ruled by the equitable principles that between equal equities the law will prevail, and that the equity of a person misled is superior to that of the person misleading.

Appeal from the Circuit Court of the United States for the Northern District of Texas.

This was a suit in equity by Mrs. A. E. Fitzhugh and her husband, L. H. Fitzhugh, against Mrs. Fisher Hazzard, to enjoin the latter from prosecuting an action of ejectment; complainants claiming to be the equitable owners of the land in controversy, as their homestead. The title sued upon in the ejectment suit by the defendant herein was a title acquired by purchase upon the foreclosure of the trust deed mentioned in the opinion of the circuit court, which is set out below. The defendant filed an answer under oath, and also a cross bill, praying affirmative relief. The circuit court entered a decree dismissing the cross bill, canceling the alleged lien of the defendant and all her muniments of title, and perpetually enjoining her from setting up any claim to the premises, or further prosecuting her action of ejectment.

The circuit court (McCormick, Circuit Judge) delivered an opinion, which is here set out in full:

All of the chief actors in the transaction out of which this suit grew are persons of high respectability and superior intelligence. They have all testified by deposition in this case, and I find no substantial conflict in their testimony. I have examined fully and carefully all of the evidence, and find that the complainants, L. H. Fitzhugh and A. E. Fitzhugh, were married in December, 1851, and from that time have lived together as husband and wife. In 1886 they acquired the land in controversy, and from that year have continued to occupy and use it as their residence homestead, having and claiming no other homestead. In the latter part of November, 1888, L. H. Fitzhugh applied to Bryan T. Barry, then the manager of the Security Mortgage & Trust Company, for a loan of money to be secured on the land in controversy. The form of security offered was a deed by the complainants to S. H. Milliken and a note by Milliken, purporting to be for the unpaid purchase money in the sum of six thousand five hundred dollars, with the vendors' lien on the land. Barry knew that the premises were Fitzhugh's homestead; that Milliken was their son-in-law; and when, after

[1] Rehearing denied January 26, 1897.

Digitized by Google

some conference and inquiry, he had satisfied himself that the dealings with Milliken were simulated, he declined to take the note. A few days after this, negotiation began with H. M. Taylor, and he and L. H. Fitzhugh saw Barry in reference to getting from the company about $4,500, which Fitzhugh desired to raise on the land, the security to take the customary shape of a deed from the husband and wife to H. M. Taylor, reciting a cash consideration in part and a purchase-money note for the balance, to become due in five years. The abstract of title was submitted to Judge T. S. Miller, the company's legal adviser, but no intimation was given him touching the recent offer and rejection of the Milliken deed and note on the same property. The attorney's report on the title being satisfactory, Barry agreed to give $4,500 for the note. The deed from L. H. Fitzhugh and his wife, A. E. Fitzhugh, to H. M. Taylor, the joint affidavit of all three, the purchase-money note, and the deed of trust executed by H. M. Taylor, were all prepared in the office of the company, under Barry's dictation, on printed forms kept in stock in readiness, and furnished by the company for such transactions. The deed recited a cash consideration in the sum of $9,000 in hand paid to the grantors by the maker of the note, and the further consideration of $5,-200, for which latter sum the lithographed note with coupons was given, payable to the order of the Security Mortgage & Trust Company; and the deed of trust was made to J. T. Dargan, trustee, and to his successors in this trust, to secure the payment of the principal note and interest coupons as each matured. These papers all bear date 10th December, 1888, and appear to have been executed and delivered on that day. The joint affidavit of the three parties is as follows:

"The State of Texas, County of Dallas—ss.: We, L. H. Fitzhugh and wife and H. M. Taylor, do solemnly swear that on the 10 day of December, 1888, the said L. H. Fitzhugh and wife sold to said H. M. Taylor a certain parcel of land, to wit, 3½ acres of the John Grigsby survey, in East Dallas, Dallas county, Texas, described in the deed thereto, and in part payment for which a balance of $5,200 will be due on the 1st day of December, 1893, with interest at the rate of seven per cent. from December 10, 1888; that said balance is a subsisting vendor's lien against said land conveyed in said deed, recorded in Book —, page —, Records of Deeds of Dallas County, to which said deed and the record thereof reference is hereby made for a more complete description of said land; that the vendor's lien is specially retained in said deed to secure the payment of said balance; that all payments made on said balance have been credited; that there are no pending suits or unsatisfied judgments in the supreme court, or any circuit or district court of the United States, or in the supreme court, court of appeals, or any district, county, or justice of the peace's court of this state, or in any other court whatsoever, which in any manner affect the title to said land; that there are no executions against us in the hands of any United States marshal, or of any sheriff or constable, and that none of said officers have levied on, or advertised for sale, or made a deed to, said land, or any part thereof, since the said L. H. Fitzhugh and the said H. M. Taylor acquired title to it; that we are neither principal nor surety upon any bond which is or may become a lien upon said land; that there are no mechanics' liens, or liens for labor or materials, upon the buildings situated upon said land; that there are no unrecorded deeds, trust deeds, or mortgages to or upon said premises; that the said deed to said land was made in good faith, and not for the purpose of defeating or avoiding any homestead law of this state; that the title is perfect in the said H. M. Taylor, subject to said lien; that the said vendors were of legal age when said deed was executed; that there are no liens of any kind against said land prior to said vendor's lien; improved city property; that there is on said premises one house, of the value of $4,500.00; 1 barn, of the value of $500.00; other outhouses, of the value of $200.00; and fencing, of the value of $200.00; that the present value of the premises, without the perishable improvements, is $9,000.00; that the present value of the perishable improvements, including fencing, is $5,200.00; that the total value of the above-described premises is $14,200.00; that Taylor owns other real estate and property as follows, about $1,500.00, clear of all lien; that my indebtedness is, besides said note, $1,600.00; that the above representations are made for the purpose of effecting a sale of the vendor's lien as above described; and that they are true.

H. M. Taylor.
"L. H. Fitzhugh.
"A. E. Fitzhugh.

Digitized by Google

"Sworn to and subscribed before me, this 10 day of December, A. D. 1888, and I hereby certify that affiants were by me made acquainted with the contents of this instrument before swearing.

"[Seal.] M. L. Robertson,
"Postoffice of Maker, Dallas, Tex. Notary Public, Dallas Co."

Bearing the same date is a letter addressed to the Security Mortgage & Trust Company, in these words:

"Gentlemen: I was present and acted as attorney in making the sale of 3½ acres to H. M. Taylor, from L. H. Fitzhugh and wife, A. E. Fitzhugh, and believe the same to be a bona fide transaction, and an absolute sale, without any condition of defeasance. Lafayette Fitzhugh, Attorney."

There is also another affidavit, as follows:

"The State of Texas, County of Dallas. Before me, the undersigned authority, on this day personally appeared L. H. Fitzhugh and A. E. Fitzhugh, husband and wife, who, after having been by me duly sworn on oath, says: That they in good faith have sold and conveyed a certain tract of land as follows: 3½ acres adjoining the city of East Dallas, in Dallas county, out of the John Grigsby survey, beginning at a stake in the S. W. boundary of Gano avenue, 861 feet S., 45 deg. east, from the center of Ross avenue; thence N., 45 deg. W., 360 feet, along the line of Gano avenue to San Jacinto street; thence S., 45 deg. W., 408 feet, to the N. E. line of Fitzhugh avenue, on the E. boundary line of Duncan & Words addition; thence S., 45 deg. E., 360 feet, to a point on Fitzhugh avenue; thence N., 45 deg. E., 408 feet, to the place of beginning,—being 3½ acres out of 4½-acre tract conveyed to L. H. Fitzhugh by Jno. T. Gano, 31st Aug., 1886, and recorded in Book 92, page 330, Records of Deeds, Dallas County. That the intention and purpose in making said conveyance was to make an absolute sale of said property. That at the time of the execution of said conveyance there was no expressed or tacit understanding between us and said Taylor that said conveyance was made for the purpose of evading the homestead law, and was not made for the purpose of procuring a loan on said property, nor with any condition of defeasance whatever. Witness our hands, this 10th day of December A. D. 1888. L. H. Fitzhugh.
"A. E. Fitzhugh.

"Sworn to and subscribed before me, this 10th day of December, A. D. 1888.
"[Seal.] M. L. Robertson,
"Notary Public, Dallas County, Texas."

The writer of the letter is the son of complainants. The transaction, as between the complainants and H. M. Taylor, was wholly colorable. The recitation of the cash consideration was purely fictitious. No money passed or was to pass in the transaction, except the $4,500, which was passed the same day directly from Barry to L. H. Fitzhugh. The note and deed of trust were sold to Mrs. Hazzard for their full face value, without notice of the simulation; but, by subsequent dealings between her and the mortgage company, she now has no substantial interest in the controversy, and the Security Mortgage & Trust Company is now as much the real beneficial owner of the securities as if no transfer of them had been made.

I conclude that Barry had then present knowledge of facts sufficient to charge him and the company he represented with notice of the character of the transaction between Fitzhugh and Taylor; that the deed of trust was void, and the land is not bound. The respondent is entitled to have a judgment against L. H. Fitzhugh for the amount remaining unpaid on the note, assessing that amount without reference to the $3,000 which appears indorsed as amount bid at the sale made by the substitute trustee, and all the costs in this suit; and the complainants are entitled to a decree making void their deed to H. M. Taylor, his deed of trust to J. T. Dargan, and De Edward Greer's deed to Mrs. Fisher Hazzard, the respondent; removing the cloud cast by these conveyances on complainants' homestead, perpetually enjoining the respondent from asserting any right thereunder, and quieting the title and right of possession in the complainants to the land in controversy, and adjudging costs against the respondent in favor of the complainant A. E. Fitzhugh.

Digitized by Google

W. W. Leake and De Edward Greer, for appellant.
K. R. Craig, for appellees.

Before PARDEE, Circuit Judge, and SPEER and PARLANGE, District Judges.

SPEER, District Judge. There are two principles of equity which should control this case. They are: (1) Between equal equities the law will prevail. (2) The equity of the party who has been misled is superior to that of the party misleading.

Now, Mrs. Hazzard holds the legal title. She is a purchaser in good faith. The deed with the affidavits of the Fitzhughs disclose to her no purpose to defeat the homestead laws of Texas, but affirmatively show the contrary. She bought the security in good faith as an investment, and, conformably to its terms, she became the purchaser at the sale by the substituted trustee. She is then a bona fide purchaser, without notice of Mrs. Fitzhugh's alleged equity. Conceding the latter to exist, the equities are equal. The good faith of the purchase is expressly recognized in the opinion of the learned circuit court. It seems clear, then, that the legal title of Mrs. Hazzard should prevail.

It is not a sufficient reply to this to point out that the Security Mortgage & Trust Company, which may have known the transaction to be colorable, has guarantied the value of the security that Mrs. Hazzard bought. She has obtained, as the result of her investment, the legal title, by regular and lawful methods, and the equitable title of a bona fide purchaser. This title is good against everything except a superior equity which would overcome it, and her equity is at least equal to that upon which the complainant relies. A court of equity, therefore, may not enjoin her efforts to recover the land to which she is entitled. In addition to this, the Fitzhughs, including Mrs. Fitzhugh, placed on the market a security which upon its face was valuable and negotiable, and attractive to investors like Mrs. Hazzard. It was commended to her. Without suspecting the faith of husband, wife, and son, Mrs. Hazzard had no reason to doubt that the conveyance of title was valid and absolute. It is judicially ascertained that this was her conclusion. Her broker and her confidential adviser had formed the same opinion. If the conveyance failed to disclose a right in Mrs. Fitzhugh to avoid the sale, Mrs. Hazzard was misled, and misled by the complainants. Now, Mrs. Fitzhugh seeks a court of equity to cancel the purchase to make which she (all innocently, we may assume) misled Mrs. Hazzard. It follows that the equity of Mrs. Hazzard must prevail. Since it is not impossible to sell the homestead under the Texas law, it seems that Mrs. Hazzard has purchased the homestead of Mrs. Fitzhugh, and her title is good.

For these reasons, the decision of the circuit court should be reversed, and a decree to settle the controversy should be granted on the cross bill of the respondents. The decree of the circuit court is reversed, and the cause is remanded, with instructions to enter a decree on the original bill in favor of the defendant therein, Mrs.

Digitized by Google

Fisher Hazzard, and dissolving the injunction, with costs, and to enter a decree in favor of the cross complainant, Mrs. Fisher Hazzard, on her cross bill, confirming and quieting her title to the premises in controversy, with such other relief as may be proper in equity.

(78 Fed. 558.)

BRADY v. EVANS et al.

(Circuit Court of Appeals, Sixth Circuit. February 2, 1897.)

No. 419.

BANKS AND BANKING—FALSE STATEMENTS—ACTION AGAINST DIRECTORS BY DEPOSITOR—PLEADING.

In an action of deceit against the directors of a bank for making false statements as to its condition, whereby the plaintiff was induced to leave in the bank a deposit, previously made, which was lost by the failure of the bank, it is not sufficient to allege that the plaintiff was induced to remain a depositor by the statements so made, but it must be directly averred that, but for such statements, he would have withdrawn his deposits before the failure of the bank.

In Error to the Circuit Court of the United States for the District of Kentucky.

Ed. C. O'Rear and T. J. Bigstaff, for plaintiff in error.

Wm. H. Holt, M. S. Tyler, Lewis Apperson, J. M. Benton, and Ed. W. Hines, for defendants in error.

Before TAFT and LURTON, Circuit Judges, and SAGE, District Judge.

TAFT, Circuit Judge. This is a writ of error to a judgment of the circuit court for the district of Kentucky. Brady, the plaintiff below and plaintiff in error, filed his petition against the defendants, alleging that they were directors of the New Farmers' Bank of Mt. Sterling, Ky., a banking corporation; and that on and after the 30th of June, 1893, and prior to the 27th of July, 1893, the defendants published in newspapers and otherwise a statement of the condition of the bank, which statement the plaintiff read; and, as he avers in his petition, it was relied on by him "in making the deposits hereinafter stated; the said published statements being published and circulated by the defendants, the said board of directors of the said bank, with the intention that the public receiving and reading them should rely upon them as being true." The statements are then set forth, showing a prosperous condition of the bank. The petition then proceeds:

"Plaintiff says that he was a depositor at said bank, and had his money there on deposit, and that, relying upon the said published statement, and upon the said statement of the said bank and its said directors as true, and believing that its assets numbered among its resources stated above were collectible and solvent, as he was induced by said published statement to believe, and believing that the said bank had the capital stock and surplus and undivided profits as stated above, and as stated in said published statement, and believing that it had earned the sum stated hereinabove for the six months prior to said statement, and that of

Digitized by Google

the said earnings it had been able to pay to its stockholders a semiannual dividend of three per cent., this plaintiff was induced to believe, and did believe, that said bank was solvent and good and safe, and thereby he was induced to permit, and did permit, three thousand one hundred and four dollars and twenty-four cents ($3,104.24), previously deposited by him in the said bank, to remain therein on deposit, when, on July 27, 1893, without this plaintiff knowing that the aforesaid published statements were untrue, the said bank made a deed of assignment for the benefit of its creditors to one R. B. Young, and that said deed of assignment was placed to record, and the affairs of said bank are now being wound up under the said trust."

The petition then avers that on the 30th day of June, and every day thereafter, the bank was insolvent, and that the statements concerning its condition published by the defendants were false. The petition then proceeds:

"And plaintiff now avers that each and all of the aforesaid false statements were known by all of the defendants herein sued to be false when made, or, by the exercise of ordinary diligence upon their part, could have been ascertained by them to be false, before the making of the same, one of which facts is true, but which plaintiff does not know; and plaintiff did not know at the time of any of said published statements, or of his reliance thereon as aforesaid, that they, or any of them, or any part of either of them, were untrue. And plaintiff avers that by reason of said false statements, and of his said reliance thereon, this plaintiff has suffered damage, and is damaged in the sum of two thousand, eight hundred and ninety-three dollars and eighty-two cents ($2,893.82), and that he sustained the said damage as of the 27th day of July, 1893."

To this the defendants filed a general demurrer. The demurrer was sustained on the ground that the averment in respect to the knowledge of the defendants of the falsity of the statements was not sufficient to entitle the plaintiff to hold them in an action of deceit. Thereupon the plaintiff filed an amendment to the petition, in which the averment of the defendants' knowledge was as follows:

"Each and all knew that the said published statements set out in the petition herein were all made by the said defendants and directors, and that they and each of them knew that the said published statements when made were not true to a material degree, and as stated in the petition; or that said published statements were made by each of the said defendants herein as of their own knowledge, they making said published statements as true, when, in point of fact, they did not know whether the said statements were true or false, and plaintiff says that one of said averments above as to defendant's knowledge and making of said statements sued on is true, but which one plaintiff does not know; and that the said statements were untrue at the time made, and the plaintiff did not know that said statements were untrue when made, and when he acted upon them; and that he believed they were true in so acting, as stated in the petition; and they were made by the defendants and each of them with the intent that the plaintiff should rely upon said statements as being true."

Upon demurrer to this amended petition the court again sustained the demurrer, whereupon the plaintiff moved for leave to file a second amended petition, in which the averment with respect to knowledge by the defendants of the statement was as follows:

"That the defendants knew them to be untrue when they were made; or that the defendants, not knowing whether they were true, made and published them as stated, in reckless disregard of the truth, and as of their own knowledge. Plaintiff says that either the statement that defendants knew said statements were untrue when published, or the statement that they published them not knowing whether they were true or not, but published them as of their own knowledge, is true; but which of said alternative statements is true plaintiff does not know."

Digitized by Google

The defendants objected to the filing of this amended petition, which objection was sustained by the court, and the amended petition was thereupon dismissed, and judgment rendered for the defendants. The second amended petition, which was tendered and not allowed to be filed, was embodied in the bill of exceptions.

As the court treated the demurrer below, it raised a nice and much-mooted question in the law of deceit. That question is, how much actual knowledge the defendant in an action for deceit must be shown to have of the falsity of the statement which is the basis of the action before he may he held liable. We have had occasion to comment on the diversity of views upon this question in Penn Mut. Life Ins. Co. v. Mechanics' Sav. Bank & Trust Co., 19 C. C. A. 317, 73 Fed. 653, where we said:

"Whether actual bad faith must be shown in common-law actions for deceit to justify a recovery has been the subject of much controversy, and it has been finally settled in England by the decision of the house of lords in Derry v. Peek, L. R. 14 App. Cas. 337, that there can be no recovery in such an action whenever the defendant made the statement complained of in the honest belief of its truth, however unreasonable such belief. Such, too, would seem to be the holding of the supreme court of the United States in Lord v. Goddard, 13 How. 198 (see, also, Biggs v. Barry, Fed. Cas. No. 1,402), though, in view of some of its later cases, the question may still be an open one in the latter court. Iron Co. v. Bamford, 150 U. S. 665, 14 Sup. Ct. 219. There is much authority in this country supporting the view that an action for deceit may be maintained against one making an untrue statement, though in the honest belief of its truth, if there was no reasonable ground for such belief; or, to put it in another way, if he ought to have known the truth.. Cooley, Torts (2d Ed.) 585."

We are relieved, however, from deciding the nice question suggested by a defect in the petition, which the learned judge of the circuit did not, in his view of the law, find it necessary to consider. The common-law action for deceit is an action in tort. There can be no recovery unless it can be shown that injury was done and loss occasioned by the false statement relied upon. In actions of this sort it was long ago laid down that fraud without damage or damage without fraud would not give rise to such an action. Derry v. Peek, L. R. 14 App. Cas. 337–343. It must, therefore, clearly appear upon the face of the petition that the false statement complained of actually caused loss to the plaintiff. In this case it appears that at the time the statement complained of was made the plaintiff was a depositor in defendants' bank, and the averment is that he was induced to remain a depositor by these statements. He does not aver that, but for these statements, he would have withdrawn his deposit before the failure of the bank. The date of the statements precludes the possibility that he was induced to make the deposits in the bank because the deposits were all made before the statement. The fact is, therefore, that he lost nothing by reason of the false statements, unless he would have done something but for the false statements; otherwise he was not induced to alter his position by the statements, and no loss was occasioned to him thereby. It may be argued that the words he was "induced to remain" imply that otherwise he would not have remained a depositor. But we think that, as the action of deceit is founded on fraud, every element of the cause of action

Digitized by Google

must affirmatively appear. While the common-law rule that the pleadings must be construed most strictly against the pleader has been abrogated under most code systems, it is not required, even under the code system, that every equivocal word or phrase shall be construed most strongly in favor of the pleader. On the contrary, the meaning of the pleader must be fairly ascertained, without regard to technical rules, from the whole instrument. Robinson v. Greenville, 42 Ohio St. 625; Crooks v. Finney, 39 Ohio St. 57. The words of the petition really charge no more than that the plaintiff, being a depositor in the defendants' bank, acquired confidence in its safety from the statements made; whereas, if he had known the truth, he would not have remained a depositor. It is not enough in deceit to show that, if the plaintiff had known the truth, he would have done otherwise than he did. It must appear that he did otherwise than he would have done if the false statement had not been made to him. We concur with counsel for the defendants in error in the view that:

"When one alleges that, relying upon a certain statement, he altered his condition, that is sufficient to show that the statement was the moving cause; but where the allegation is that, relying upon a certain statement, he failed to alter his condition, that is not sufficient to show that the statement was the cause of his failure to alter his condition, but he must go further, and allege that he would have altered his condition but for the statement. In the one case there is a presumption that there was some cause for the alteration of his condition, and it is sufficient to allege what that cause was. In the other case the failure to alter his condition does not require the assignment of any cause, the presumption being that he would continue in the position in which he had placed himself until something happened to induce him to change it; and therefore he must affirmatively allege that he would have changed his position but for the act of defendants of which he complains."

For this reason we think the action of the court below in sustaining the demurrer was correct. Judgment affirmed.

(78 Fed. 566.)

MAIER v. FIDELITY MUT. LIFE ASS'N.

(Circuit Court of Appeals, Sixth Circuit. February 2, 1897.)

No. 385.

LIFE INSURANCE—FALSE STATEMENTS IN APPLICATION—ANSWERS BY AGENT.

The F. Ins. Co. issued a policy on the life of M., which was recited on its face to be issued in consideration of the application, which was made a part of the policy, and a copy of which was thereto attached, and to be subject to the conditions thereon indorsed, one of which was that, if any statement in the application was false, the policy should be null and void. The application concluded with a provision that all statements contained in it, by whomsoever written, were warranted to be true, and that no verbal statement, to whomsoever made, should modify the contract. Upon the trial of an action on the policy, it appeared that M. made the application at the solicitation of an agent of the insurance company; that such agent had a short conversation with him when he was in a hurry, and, after answering a few questions, he told the agent to finish the application himself, and he would sign it and leave it for the agent to finish, which the agent did; that the answers to questions in the application as to M.'s health and his habits

Digitized by Google

of drinking were totally at variance with the facts, which were such as, if known, to make the acceptance of M.'s application very unlikely. *Held*, that the insurance company was not estopped to deny the validity of the policy, and a verdict in its favor was properly directed by the court.

In Error to the Circuit Court of the United States for the Eastern District of Michigan.

James H. Pound, for plaintiff in error.
Alfred Lucking, for defendant in error.

Before HARLAN, Circuit Justice, and TAFT and LURTON, Circuit Judges.

HARLAN, Circuit Justice. This is an action upon a policy of life insurance for $10,000, issued September 30, 1892, by the Fidelity Mutual Life Association of Philadelphia, upon a written application to that association by the assured, Martin Maier, of Detroit, Mich. The beneficiary named was the wife of the assured, the present plaintiff in error.

In the answers to questions embodied in the application, which was made September 26, 1892, it was stated, among other things, that the assured was then in "good health," and "free from any and all diseases, sicknesses, ailments, or complaint, trivial or otherwise"; that he had "never had or been afflicted with any sickness, disease, ailment, injury, or complaint"; that the last physician he had consulted, or who prescribed for him, was Dr. Morse Stewart, of Detroit, two years previously, and that his ailment then was "toothache"; that he had not consulted, or been prescribed for by, any other physician or medical man during the previous 10 years; and that he did not use, and never used, spirits, wines, or malt liquors, and had always been temperate and sober.

The policy recites that it was issued in consideration of the application, "made part hereof, and a copy of which is hereto attached," and subject to all the requirements stated, "and the conditions hereon indorsed." One of the conditions indorsed on the back of the policy is that, "if any statement contained in the application on which this policy is issued be untrue in any respect, then this policy, except as herein provided, shall be ipso facto null and void."

The application thus concluded:

"I hereby agree and bind myself as follows: That the statements above made or contained, by whomsoever written, are material to the risk, and warranted to be true; that I have signed this application in my own handwriting; that * * * all provisions of law in conflict with or varying the terms of this agreement and policy applied for are hereby expressly waived, and the policy issued hereon shall not become binding on the association until the first payment due thereon has been actually received by the association or its authorized agent during my lifetime and good health; that no verbal statement, to whomsoever made, shall modify this contract, or in any manner affect the rights of the association, unless the same be reduced to writing, and be presented to and approved by the officers of the association at the home office, in Philadelphia, no agent or examiner having any power or authority to make or alter contracts, waive forfeitures, or grant credit; that * * * this application shall be the sole basis of the contract with the association, if a policy be issued hereon; and that, if any concealments or untrue state-

Digitized by Google

ments or answers be made or contained herein, then the policy of insurance issued thereon and this contract shall be ipso facto null and void: provided, always, that, if the necessary payments be made to keep said policy in force, it shall be incontestable, except as herein set forth.

"Dated at Detroit this 26th day of September, 1892. Martin Maier.

"In presence of D. A. Rothschild, Soliciting Agent."

Immediately below the attestation to the application the following direction was printed with a rubber stamp:

"Review the answers to questions given in this copy of your application, and, if any correction has been made, advise the president of the association."

The plea was the general issue, with notice, according to the Michigan practice, that the defendant would give in evidence, by way of defense, the above application of the assured, which, it was alleged, was duly signed by him and delivered to the defendant, and "on the faith of which, and in full reliance upon the statements thereon made, the said defendant did issue to the said Martin Maier the policy of insurance declared upon."

The notice further stated that the company would show on the trial that the application and statements therein were false and fraudulent in many particulars; among others, in the following: That Maier was not at the time of his application in good health, and free from any and all sickness, ailments, or complaints, but was in bad health, and suffering from epilepsy, attacks of an epileptoid character, fits, convulsions, habitual constipation, alcoholism, softening of the brain, nervous prostration, neuresthenia and kindred troubles, and other diseases; that he had been afflicted with numerous sicknesses, diseases, ailments, and injuries, including those above specified, and with a number of injuries, among others, injuries received on or about January 19, 1887, August 2, 1889, and July 10, 1890, all of which were serious; that he had consulted and been prescribed for by numerous physicians during the period named in the application,—among others, by Dr. George Duffield, Dr. James Campbell, Dr. Wilcox, Dr. W. H. Poole, Dr. Yarnell, and by others unknown to defendant, all within said period; that the statement that he had consulted Dr. Morse Stewart, about two years prior to his application, for toothache only, was false and fraudulent, as he had consulted said Stewart, who prescribed for him, within two years of that date, for an attack of epilepsy, or an attack of an epileptoid character, and likewise had been treated for different serious troubles during the previous 10 years by that physician, who had attended and prescribed for him on various occasions during that period; that the statement made by said deceased in his application, that he did not then use, and never had used, spirits, wines, or malt liquors, and had always been temperate and sober, was false and fraudulent, in that he had used spirits, wines, and malt liquors, and each of them, and had not always been temperate and sober.

It appeared in evidence that Maier made the application for insurance at the suggestion of one Rothschild, who testified that he was at that time working for Mr. Montgomery, the Detroit agent of the defendant. But it does not appear that Montgomery had

Digitized by Google

any knowledge of Rothschild's effort to secure an application from Maier. Rothschild testified:

"I met Mr. Maier in the street, and I asked him to give me his application. He was in a hurry, and we stepped in a clothing store on Michigan avenue, and he says, 'Hurry up. I haven't much time.' I asked him a few questions. He finally said, 'Well, you fill them up yourself.' I asked him about drinking, and he said, 'I am not drinking anything at present, you understand,' so I didn't put that in, and all the other questions accordingly. * * * He was in a hurry, only had two or three minutes to write it up, and he says, 'You finish it.' He says, 'I will sign my name now, and you finish it, and I will go away.' * * * Q. What, if anything, did you say to him about his having been afflicted with sickness or disease or ailments? A. He told me he had some toothache, and I put it down. Q. What, if anything, did you say to him as to who treated him for it? A. He said, 'Dr. Morse Stewart,' and I put that down. * * * Q. What, if anything, did you say to him about intoxicating liquors? A. I knew he did not drink any more at that time. Q. Did you, or did you not, say anything to him about it? A. Yes. Q. At that time? A. Well, no, I didn't, as he told me he didn't drink anything at the time when I took the insurance. Q. Did you say that Mr. Maier told you so at that time? A. I don't know as he did. I knew he didn't drink anything at that time. Q. Now, my question is, did he say anything on that subject at that time? A. No, he didn't say anything." On cross-examination he was asked if he did not know that Maier had been to the Keeley Cure for drunkenness, and he answered: "No, sir, I didn't know; I heard he was there." Being asked whether he did not know that Maier had been convicted in the police court for drunkenness, he answered: "I don't know anything about it. I knew when he came out of the Keeley Cure." Again: "Q. And he did not use, and had never used, spirits, wines, and malt liquors, and had always been temperate and sober. Now, just what did he say to you about that? A. Only asked him whether he was drinking, and he says, 'No,' he didn't drink any more, and I cut that off. I knew he was not drinking, and I didn't think it was material to put in that."

The evidence of Rothschild, in connection with other proof in the cause, leaves no doubt that if the facts as to Maier's habits and condition had been fairly disclosed, in answer to the questions contained in the printed application, the company would have declined to issue the policy. Rothschild, therefore, according to the weight of the evidence, suppressed the material facts; and, by reason of such suppression, Maier obtained the policy, and the unfaithful solicitor realized his commissions.

Nor can it be doubted, under the evidence, that Maier himself knew that he was not a proper subject of life insurance. It was shown from official records that on the 10th day of September, 1891, July 1, 1892, and September 10, 1892, respectively, he was tried in the police court of Detroit, and found guilty of drunkenness, and that on the 26th day of September, 1892,—the very day of his application for insurance,—a warrant was taken out charging him with being a disorderly person, in that he was a tippler, and, having been tried on the succeeding day in that court, was found guilty, and fined $7 and costs, $30, or 45 days in the Detroit house of correction. The fine and costs were paid. It was also shown that in January, 1892, he was an inmate of an institute at Northville, Mich., and was there treated by Dr. Yarnell for "alcoholism, or excessive drinking of alcoholic drinks." According to the testimony of that physician, his disease had then progressed "to the extent that his brain was considerably defective; very strong tendency towards softening of the brain, or paresis." The evidence further showed, beyond dispute, that in 1890, and again in 1891, he was

Digitized by Google

often visited and treated by Dr. Stewart for epileptic attacks, and that for some years prior to his application he was frequently, if not habitually, in a state of intoxication. There was therefore no escape from the conclusion that the statements in the application that Maier never had been afflicted with any sickness, disease, ailment, injury, or complaint; that he had not consulted or been prescribed for by any physician, except Dr. Stewart, during the preceding 10 years; and that he did not use, and had never used, spirits, wines, or malt liquors, and had always been temperate and sober,—were untrue.

But it is contended by the plaintiff that the falsity of these statements cannot be attributed to the assured, so as to render the policy void, because the answers to the questions propounded to him were in fact prepared by the agent of the insurance company, and that the company is estopped to deny the validity of the policy, upon the grounds stated, if its agent knew the facts and suppressed them when preparing the answers, or failed, fraudulently or negligently, having an opportunity to do so, to bring out the facts called for by the questions embodied in the application.

We cannot accept this view of the contract between the parties. If the assured authorized the soliciting agent to prepare his answers to the questions propounded, and thereafter signed the application so prepared, neither he nor any one claiming the benefit of the policy ought to be heard to say that he did not read the answers, or know their contents before signing the application. His attestation of the application by his signature was a representation to the company that the answers were true; for, by the terms of his application, he stipulated that the statements made in answer to questions, "by whomsoever written," were material to the risk, and warranted to be true, and, if any concealments or untrue statements or answers were made, the policy, as well as the contract evidenced by it, should be ipso facto null and void. And when the accused accepted a policy declaring upon its face that it was issued in consideration of the application made part of the policy, and subject to the conditions indorsed on the policy, the contract became complete, and its terms are to be respected, and cannot, in an action on the policy, be ignored or made of no effect. It is an essential fact in the case that in the body of the contract evidenced by the policy are found recitals which make the application, as well as the conditions indorsed on the policy, part of the contract of insurance.

It was said in argument that the company should not be permitted to take advantage of the misconduct or wrong of its own agent. But the law did not prohibit the company from taking such precautions as were reasonable and necessary to protect itself against the frauds or negligence of its agents. If the printed application used by it had not informed the applicant that he was to be responsible for the truth of his answers to questions, and if the want of truth in such answers were wholly due to the negligence, ignorance, or fraud of the soliciting agent, a different question would be presented. But here the accused was distinctly notified by the

Digitized by Google

application that he was to be held as warranting the truth of his statements, "by whomsoever written." Such was the contract between the parties, and there is no reason in law or in public policy why its terms should not be respected and enforced in an action on the written contract. It is the impression with some that the courts may, in their discretion, relieve parties from the obligations of their contracts, whenever it can be seen that they have acted heedlessly or carelessly in making them. But it is too often forgotten that in giving relief, under such circumstances, to one party, the courts make and enforce a contract which the other party did not make or intend to make. As the assured stipulated that his statements, which were the foundation of the application, were true, by whomsoever such statements were written, and as the contract of insurance was consummated on that basis, the court cannot, in an action upon the contract, disregard the express agreement between the parties, and hold the company liable, if the statements of the assured—at least, those touching matters material to the risk—are found to be untrue.

The views we have expressed are in harmony with the decisions of the supreme court of the United States. In Insurance Co. v. Fletcher, 117 U. S. 519, 529, 531, 534, 6 Sup. Ct. 837, the defense was that certain statements and representations respecting his health and condition were made by the assured in his application, the truthfulness of which he warranted, and agreed that they should be the basis of any contract between him and the company, and that the policy should be void if such statements, or any of them, were in any respect untrue, and all moneys paid on it forfeited. The policv in that case was accompanied by a copy of the application, and recited that it was issued in consideration and upon the faith of the statements and representations contained in the application. The plaintiff in the suit pleaded that the answers in the application had been prepared by the agents of the company, and that they had not properly put down what he had said to them in answer to questions. The supreme court said:

"It is, of course, not necessary to argue that the agent had no authority from the company to falsify the answers, or that the assured could acquire no right by virtue of his falsified answers. Both he and the company were deceived by the fraudulent conduct of the agent. The assured was placed in a position of making false representations in order to secure a valuable contract, which, upon a truthful report of his condition, could not have been obtained. By them the company was imposed upon, and induced to enter into the contract. In such a case, assuming that both parties acted in good faith, justice would require that the contract be canceled and the premiums returned. As the present action is not for such cancellation, the only recovery which the plaintiff could properly have, upon the facts he asserts, taken in connection with the limitation upon the powers of the agent, is for the amount of the premiums paid, and to that only would he be entitled by virtue of the statute of Missouri. But the case, as presented by the record, is by no means as favorable to him as we have assumed. It was his duty to read the application he signed. He knew that upon it the policy would be issued, if issued at all. It would introduce great uncertainty in all business transactions, if a party making written proposals for a contract, with representations to induce its execution, should be allowed to show, after it had been obtained, that he did not know the contents of his proposals, and to enforce it, notwithstanding their falsity as to matters essential to its obligation and validity. Contracts

Digitized by Google

could not be made, or business fairly conducted, if such a rule should prevail, and there is no reason why it should be applied merely to contracts of insurance. There is nothing in their nature which distinguishes them in this particular from others. But here the right is asserted to prove, not only that the assured did not make the statements contained in his answers, but that he never read the application, and to recover upon a contract obtained by representations admitted to be false, just as though they were true. If he had read even the printed lines of his application, he would have seen that it stipulated that the rights of the company could in no respect be affected by his verbal statements, or by those of its agents, unless the same were reduced to writing and forwarded with his application to the home office. The company, like any other principal, could limit the authority of its agents, and thus bind all parties dealing with them with knowledge of the limitation. It must be presumed that he read the application, and was cognizant of the limitations therein expressed." Referring to the previous cases of Insurance Co. v. Wilkinson, 13 Wall. 222, and Insurance Co. v. Mahone, 21 Wall. 152, the court said: "In neither of these cases was any limitation upon the power of the agent brought to the notice of the assured. * * * Where such agents, not limited in their authority, undertake to prepare applications and take down answers, they will be deemed as acting for the companies. In such cases it may well be held that the description of the risk, though nominally proceeding from the assured, should be regarded as the act of the company. Nothing in these views has any bearing upon the present case. Here the power of the agent was limited, and notice of such limitation given by being embodied in the application, which the assured was required to make and sign, and which, as we have stated, he must be presumed to have read. He is therefore bound by its statements." Again: "There is another view of this case equally fatal to a recovery. Assuming that the answers of the assured were falsified as alleged, the fact would be at once disclosed by the copy of the application, annexed to the policy, to which his attention was called. He would have discovered by inspection that a fraud had been perpetrated, not only upon himself, but upon the company, and it would have been his duty to make the fact known to the company. He could not hold the policy without approving the action of the agents, and thus becoming a participant in the fraud committed. The retention of the policy was an approval of the application and of its statements. The consequences of that approval cannot, after his death, be avoided."

It is a mistake to suppose that any different views are expressed in Insurance Co. v. Chamberlain, 132 U. S. 304, 310, 311, 10 Sup. Ct. 87. That case turned upon its special facts, and the decision was controlled by a statute of Iowa, one section of which provided that:

"Any person who shall hereafter solicit insurance, or procure applications therefor, shall be held to be the soliciting agent of the insurance company or association issuing a policy on such application, or on a renewal thereof, anything in the application or the policy to the contrary notwithstanding."

The court said:

"This statute was in force at the time the application for the policy in suit was taken, and therefore governs the present case. It dispenses with any inquiry as to whether the application or the policy, either expressly or by necessary implication, made Boak the agent of the assured in taking such application. By force of the statute, he was the agent of the company in soliciting and procuring the application. He could not, by any act of his, shake off the character of agent for the company. Nor could the company, by any provision in the application or policy, convert him into the agent of the assured. If it could, then the object of the statute would be defeated." Again, in the same case: "The purport of the word 'insurance' in the question, 'Has the said party any other insurance on his life?' is not so absolutely certain as, in an action upon the policy, to preclude proof as to what kind of life insurance the contracting parties had in mind when that question was answered. Such proof does not necessarily contradict the written contract. Consequently, the above clause, printed on the back of the policy, is to be interpreted in the light of the statute and of the understanding reached be-

Digitized by Google

tween the assured and the company by its agent when the application was completed, namely, that the particular kind of insurance inquired about did not include insurance in co-operative societies. In view of the statute and of that understanding, upon the faith of which the assured made his application, paid the first premium, and accepted the policy, the company is estopped, by every principle of justice, from saying that its question embraced insurance in co-operative associations. The answer of 'No other,' having been written by its own agent, invested with authority to solicit and procure applications, to deliver policies, and, under certain limitations, to receive premiums, should be held as properly interpreting both the question and the answer as to other insurance."

While the issues present questions of general law, upon which this court may exercise an independent judgment, we are gratified to find that well-considered decisions of the supreme court of Michigan are to the same general effect. In Cleaver v. Insurance Co., 65 Mich. 527, 531, 533, 32 N. W. 660, it appeared that a policy of fire insurance provided that it should be void if other insurance on the property was procured without the consent of the company written upon the policy. Additional insurance was procured, with the knowledge and assistance of the company's agent, but the company's consent was not indorsed on the policy, nor did it receive notice of such insurance. The policy declared, as a part of the contract, that the agent of the company had no authority to waive, modify, or strike from the policy any of its printed conditions, nor revise the policy if it should become void by reason of the violation of any of its conditions. It also provided:

"And it is hereby mutually understood and agreed by and between this company and the assured that this policy is made and accepted upon and with reference to the foregoing terms and conditions, all of which are hereby declared to be a part of this contract, and are to be used and resorted to in order to determine the rights and obligations of the parties hereto in all cases not herein otherwise specially provided for in writing."

The supreme court of Michigan said:

"It is claimed here that the action of the agent was the action of the company, and that such action created an estoppel. But it is not shown that the agent had any authority to indorse upon the policy the written consent to additional insurance, or to waive in any way the provisions of the policy. On the contrary, the policy delivered to the insured expressly states that such agent 'has no authority to waive, modify, or strike from the policy any of its printed conditions; * * * nor, in case this policy shall become void by reason of the violation of any of the conditions thereof, has the agent power to revive the same.'" After distinguishing that case from Kitchen v. Insurance Co., 57 Mich. 135, 23 N. W. 616, the court proceeded: "If the agent, under the circumstances of this case, by filling out the application for the Lansing insurance, and saying it was all right, can estop the defendant company from raising and enforcing this defense, then the clauses prohibiting the agent from waiving the conditions of the policy, or from reviving it after it has become null and void, are rendered entirely useless and nugatory." Again: "This is not a case where the insured had a right to rely upon the action of the agent, or to presume that his action was known to the company, and ratified by them, as in Insurance Co. v. Fay, 22 Mich. 467. The policy received by Cleaver distinctly pointed out the way to procure additional insurance without voiding the first insurance, and expressly prohibited the agent from waiving, altering, or modifying the process of obtaining further insurance. The fact that the plaintiff may not have read the printed conditions of his policy, and relied, in ignorance of them, upon the implied or assumed powers of the agent, cannot help him. It was his business to know what his contract of insurance was, and there can be no difference in this respect between an insurance policy and any other contract. In the absence of any fraud in the making of the same, and none

Digitized by Google

is claimed in this case, the insured must be held to a knowledge of the conditions of his policy, as he would be in the case of any other contract or agreement. When the policy of insurance, as in this case, contains an express limitation upon the power of the agent, such agent has no legal right to contract as agent of the company with the insured, so as to change the conditions of the policy, or to dispense with the performance of any essential requisite contained therein, either by parol or writing; and the holder of the policy is estopped, by accepting the policy, from setting up or relying upon powers in the agent in opposition to limitations and restrictions in the policy. Merserau v. Insurance Co., 66 N. Y. 274; Catoir v. Trust Co., 33 N. J. Law, 487. The circuit judge, as the case stood in the court below, should have directed a verdict in favor of the defendant."

In Cook v. Insurance Co., 84 Mich. 12, 17, 18, 47 N. W. 568, 570, which was an action upon an accident policy, and in which the defense was a false statement by the assured as to his habits, the policy purported to have been issued in consideration of the statement of facts warranted in the application to be true, and upon conditions printed upon the back of the policy, which, it was provided, could not be waived or altered by the agent. The court, after distinguishing the case before it from Insurance Co. v. Hall, 12 Mich. 202, and Insurance Co. v. Olmstead, 21 Mich. 246, in which cases it said, "The power of the agents was in no manner limited by the terms of the policies themselves," proceeded:

"In the present case the policy provides that the agent of the company cannot waive or alter any of the agreements and conditions printed on the back of the policy. This question was fully discussed by Mr. Justice Morse in Cleaver v. Insurance Co., 65 Mich. 527, 532, 32 N. W. 660, 662, and it was there said: 'It cannot be successfully maintained but that the company has the right and the power to restrict as it may choose the powers and duties of its agents, and, when the authority is expressly limited and restricted by the policy which the insured receives, there can be no good reason, either in law or equity, why such limitations and restrictions shall not be considered as known to the insured and binding upon him.'" "The court below on the trial proceeded on the theory that notice to Mr. Eadus or to Mr. Patton was notice to the company, and charged the jury that the defendant had a right to waive the conditions of the policy, and that, by issuing the policy to Mr. Cook with this knowledge on the part of its agents and receiving the premiums, it waived the conditions relating to intoxication. This was not a statement of the law applicable to the case, as laid down in Cleaver v. Insurance Co., supra, and to which we must adhere."

In Gould v. Insurance Co., 90 Mich. 302, 51 N. W. 455 (Id., 90 Mich. 308, 52 N. W. 754), the court, after observing that the plaintiff, in accepting the policy of insurance, and in her subsequent dealing with the agent relative to the furnishing of proofs of loss, must be presumed to have had knowledge of the agent's want of power to waive any of the terms and conditions of the policy, said:

"This restriction upon the agent's power to waive the provisions of the policy was plainly printed upon the face of the policy, and it cannot be successfully maintained that the company had no right to restrict the powers and duties of its agent. It must be held in the present case that this power was expressly limited by the policy, and known to the insured and binding upon her. The case falls clearly within the ruling of this court in Cleaver v. Insurance Co., 65 Mich. 527, 32 N. W. 660. As it was the duty of the court, under this holding, to direct the verdict in favor of the defendant, we need not pass upon the other questions raised."

See, also, Mallory v. Insurance Co., 97 Mich. 416, 56 N. W. 773.

After this cause was argued and submitted, the attention of the court was called to the recent decision of the supreme court of

Digitized by Google

Michigan in the case of Van Houten v. Insurance Co., 68 N. W. 982. The opinion has not yet appeared in the published Reports, but we have been furnished with a copy of it for examination. Nothing decided in that case is in conflict with anything said in the case before us. The contract in the Van Houten Case does not seem to have contained any provision warranting the statements in the application to be true, "by whomsoever written." The applicant answered all the questions that were propounded to him, and, under the circumstances disclosed, had the right to assume that the company did not require any answers by him to questions not propounded to him by the agent. The company's representative assumed, without authority from the applicant, to answer for the applicant questions to which the attention of the latter was not called. The answers made to the questions put to the applicant were not impeached on any ground. The claim was that the answers made by the agent of the company upon his own responsibility, and based upon his own knowledge of the condition of the applicant, and not brought to the attention of the applicant, were untrue. The supreme court of Michigan recognized the general rule that every one is presumed to have read what he signs. But the facts in that case seem to have been such as to authorize the submission to the jury of the question whether the applicant was not misled by the conduct of the company's agent into the belief that what he was asked to sign and did sign embodied only his own answers to the questions actually propounded to him. The supreme court of Michigan said:

"The agent in this case had known the deceased for twenty-five years, had no knowledge of his being ill before the illness which resulted in his death, and, relying upon his own knowledge of the life of the assured, chose to answer these questions himself without interrogating him or calling his attention to him, or informing him that there was any importance to be attached to them. In fact, it does not appear that he informed him that there were any other questions to answer, while those he answered were answered correctly. The applicant had the right to assume that all the questions were asked, and was under no obligation to read the paper to ascertain if there were others. The application was in very small type, and very closely printed. The questions and answers were below the application, and were twenty-two in number. While every person is presumed to have read what he has signed, still we think that there was testimony in this case from which the jury might legitimately infer that the assured was misled by the agent of the defendant in making the application."

This is not inconsistent with anything determined in the present case, nor with the prior adjudications of the supreme court of Michigan in the cases above cited.

We are of opinion that the circuit court, in conformity with the established practice in the courts of the United States, as well as in the courts of Michigan, properly instructed the jury that upon the evidence, and, in view of the legal principles applicable to the contract in suit, the defendant was entitled to a verdict. There was no ground whatever upon which a verdict for the plaintiff could possibly have been sustained, and therefore it was the duty of the court, upon motion, to give a peremptory instruction for the defendant. Insurance Co. v. Mitchell, 26 C. C. A. ——, 82 Fed. ——;[1] Railway Co. v. Lowery, 20 C. C. A. 596, 74 Fed. 463, 465, et seq.

[1] Opinion not received at time of going to press.

Digitized by Google

A verdict for the plaintiff could not have been upheld unless it was true that the preparation by the company's soliciting agent of the alleged false answers in the application, or the agent's knowledge of all the facts, estopped the company from relying upon the provision of the contract declaring the policy void if the statements in the application, by whomsoever written, were untrue. In view of the undisputed facts, and as a verdict for the plaintiff would have been utterly indefensible under any reasonable view of the evidence, the question whether the plaintiff could recover could not be said to have depended upon the weight or preponderance of evidence, but became a question of law, which was correctly decided by the circuit court when it directed a verdict for the company.

Judgment affirmed.

(78 Fed. 584.)

BALTIMORE & O. R. CO. v. WEEDON et al.

(Circuit Court of Appeals, Sixth Circuit. February 2, 1897.)

No. 263.

1. CLERKS OF COURT—NEGLECT TO ISSUE PRÆCIPE—LIABILITY AND DEFENSES.
   Where it is by law made the duty of the clerk of a court, upon the filing of a præcipe by the moving party in an action, to issue process to the sheriff, whose duty it is to serve the same, and return it to the clerk, who is then to receive and record the return, it is not a defense to an action against the clerk, for neglect and default in issuing process upon a præcipe, that the plaintiff did not give attention to the clerk's performance of his duty, and see to it that it had been performed.
2. SAME—MEASURE OF DAMAGES—MITIGATION.
   In an action against the clerk of a court for failing to issue process in error to review a judgment against the plaintiff, when legally required to do so by proper proceedings on the plaintiff's part, the measure of damages is, prima facie, the amount of the judgment which the plaintiff has been obliged to pay, but the defendant may show, in mitigation of damages, that, even if the plaintiff had had an opportunity to review the judgment, he would have been unable to reduce the recovery against him.

In Error to the Circuit Court of the United States for the Eastern Division of the Southern District of Ohio.

The action was begun by the Baltimore & Ohio Railroad Company against Alfred Weedon, the clerk of the court of common pleas of Guernsey county, and his official bondsmen, to recover damages for an alleged breach of Weedon's official duty as such clerk. The penal sum of the bond was $10,000, and one of the conditions of it was that Weedon should well and truly do and perform, all and singular, each and every duty of his said office as clerk of the common pleas court enjoined upon him by law. Plaintiff's petition set out in detail the circumstances of defendant's alleged breach of duty. It averred that one Grubbs had obtained a verdict and judgment against the plaintiff company for $1,995 for personal injury; that a bill of exceptions was taken, for the purpose of presenting the same to the circuit court on error; that a motion for new trial was duly made and overruled; that after the rendition of the judgment, plaintiff duly filed a petition in error in the circuit court of said county, attached to which petition was a certified copy of the docket and journal entries in said cause in the court of common pleas, and the original papers as required by law; that he delivered said petition and accompanying papers to the defendant Weedon, clerk of the common pleas court, and ex officio clerk of the circuit court; that with the said petition in error

Digitized by Google

the plaintiff filed a præcipe in due and proper form, in accordance with the statute in such cases made and provided, directing the said clerk to issue a summons in error to the sheriff of Guernsey county, Ohio, returnable according to law, directing the said sheriff to summon the said Thomas Grubbs, the defendant in error named in said petition in error, and to notify him of the pendency of the same; that the said defendant, as clerk, disregarding his duties in the premises, failed to issue any summons in error upon said petition in error and præcipe so filed as aforesaid, and the said cause, after the expiration of six months after rendition of said judgment,—the period of limitation within which error proceedings could be brought under the law,—was dismissed by said circuit court because of the clerk's failure to issue summons as required by statute and the præcipe, and the consequent failure to obtain jurisdiction in error over said Grubbs, named as defendant in error therein; that plaintiff had filed a supersedeas bond to stay execution of judgment pending error proceedings; that Grubbs thereafter collected his judgment and interest and costs, amounting in all to $2,231.04; that there were numerous errors apparent upon the record in the suit of Grubbs against the plaintiff, and if the defendant, as clerk, had performed his duty, the judgment would have been reversed; and upon the merits of the action Grubbs had no cause of action. Wherefore the plaintiff averred that by reason of defendant's neglect and default as clerk the plaintiff had suffered a loss of $2,231.04, for which sum and interest from December 24, 1892, judgment is prayed.

The first defense of the answer was a general denial of all the facts alleged concerning the præcipe, the dismissal of the error proceedings, the collection of judgment, etc. The second defense of the answer charged, in effect, that the failure to serve a summons in the cause was the neglect and default of the plaintiff in taking all the papers from the clerk's office, and that he did not know, until after the expiration of the six months, when plaintiff returned the papers, that a petition in error and præcipe were among the papers. Defendant denied that any petition or præcipe was ever filed in his office. The reply of plaintiff denied that it or its attorney had removed the papers from the clerk's office as alleged in the answer. The cause was submitted to the court, a jury being waived in writing, and the court made the following findings:

"A stipulation in writing, signed by the parties hereto, having been filed in this cause, waiving a trial by jury, the case came on for trial of the facts and law before the court on the 7th day of June, 1894. And, the testimony having been submitted by the respective parties, and the argument of counsel having been heard thereon (the plaintiff requested the court to make a special finding of all of the facts and conclusions of law thereon in this case, which is accordingly done as follows): The court, upon consideration thereof, finds:

"First, in respect of the facts. One Thomas Grubbs sued the above-named plaintiff in the court of common pleas for Guernsey county, Ohio, to recover damages for an injury which he alleged was sustained by him on the 10th day of March, 1885, in consequence of the negligence of the defendant in said suit in suddenly starting its engine at a coaling station at or near ——, when the engine had been stopped to have its tender filled with coal from the chutes of parties who, by virtue of a contract with the railroad company, were accustomed to supply coal to trains as wanted at that place. Grubbs was the servant of the owner of the coal, and alleged that, after having gone upon the engine to get the customary certificate of the engineer for the coal which had been taken on, he was descending from the cab, when suddenly and negligently the engine was sent forward with a jerk, which sent him down, and caused his injury. That suit was tried upon the issues joined therein, and resulted in a verdict and judgment for the plaintiff in the sum of $1,995 and $—— costs of suit. This judgment was rendered on the —— day of March, 1892. Certain exceptions were taken by the defendant in that suit upon trial, which were thereafter duly incorporated in a bill of exceptions settled by the judge who presided therein. In due season, and within the six months after the judgment allowed by the laws of Ohio for that purpose, to wit, in the month of June, 1892, the said railroad company delivered, for the purpose of being filed, to the defendant, Weedon, who was, and since the 8th day of February, A. D. 1891, had been, and until the 8th day of February, A. D. 1894, continued to be, the clerk of the said court of common pleas, as well as the circuit court for that county, its petition in error, praying for the transfer into the circuit court of the record in that cause made in the court of common pleas, to the end that for

Digitized by Google

errors which it complained had been committed by the said court of common pleas the said judgment might be reversed; and also at the same time delivered to the said clerk, for the purpose of filing, a præcipe for a summons to the defendant in error, Grubbs, to appear in the circuit court to answer the proceedings in error. The petition and præcipe were not then indorsed by the said clerk with the proper filing, and were not so indorsed until after the expiration of the six months above mentioned. The said præcipe for summons was negligently lost sight of by the said Weedon, and he negligently failed to issue the said summons as he should have done, or at all. The record and other requisite papers were transferred into the circuit court, the proceedings being regular to carry the case into that court for review on error, except for the want of the issuance and service of the summons to the defendant in error, Grubbs, or of any step which was requisite to bring him in on the writ of error. Nothing was done by the plaintiff in error in that proceeding, after filing the petition and præcipe aforesaid, to bring in the defendant in error, and no further attention was given to that subject by the said plaintiff in error. In this there was negligence on the part of its attorneys. The cause was upon the calendar of the said circuit court for the December term, 1892, and on the 8th day of that month was called for hearing by that court, when, it being brought to its attention that there had been no summons to the defendant in error, and no waiver thereof, the proceedings in error were dismissed. The six months aforesaid allowed by the statute for the purpose of such proceedings had then expired, and the dismissal aforesaid operated to finally deprive the railroad company aforesaid of any right and opportunity to obtain a review of the case, or a reversal of the said judgment of the court of common pleas. The dismissal by the said circuit court was the result of the negligence of both the said Weedon, as clerk, and the attorney for the said railroad company; and this court is satisfied by the evidence it would not have happened but for the negligence of each. It was the duty of the clerk to issue the process to the sheriff. It was the duty of the attorney to see that it was made, or the service waived. It is shown that in practice such waiver is frequently made by attorneys as a matter of courtesy, or to save costs. The said railroad company was, in consequence, obliged to pay the amount of the judgment, with interest and costs, which it did on the 24th day of December, 1892, upon an execution which had been duly issued from said court of common pleas therefor; the whole amount paid being the sum of $2,231.04. Subject to the question of the competency of the inquiry, this court has examined the record and bill of exceptions in the case as subject to removal by the railroad company into the said circuit court, and is of the opinion that for an error in the refusal of the court of common pleas to permit a witness called by the defendants therein to testify whether the movement of the engine at the time of the accident was such as was usual or not (such witness having been the fireman on the engine at the time), the judgment would, in all probability, have been reversed. But this court sees no other reversible error in that record and bill of exceptions, and finds that the evidence in that case was such that the jury might lawfully find the verdict they did. No further proof than that already noted has been given on subject of the measure of the damages sustained by the plaintiff in this suit. Upon the foregoing specific facts this court finds generally thereon for the defendant.

"Second, as to the law, the court holds: (1) That the defendant is liable to such damages as were naturally and legitimately the result of his failure to issue the said summons in error. (2) He is not liable for such damages as resulted from the supervening negligence of the railroad company. (3) The defendant is not liable for the results of his own negligence concurring with the negligence of the railroad company. (4) The defendant is not liable for damages as the result of his negligence, which damages would have been avoided by the exercise of reasonable diligence on the part of the railroad company. (5) The court also holds that, in the absence of any judicial determination upon the merits of the case of Grubbs against the railroad company, that the plaintiff could not recover, and non constat the plaintiff might not have recovered therein. There is no proof showing damages to the railroad company with sufficiently legal certainty beyond the costs and expenses to it of the trial in the court of common pleas, and, there being no evidence of those, the plaintiff is not entitled to recover upon the case, even though it had not been negligent in attending to the service of the summons in error or obtaining a waiver thereof. H. F. Severens, U. S. Judge.

"Dated June 11, 1894."

Digitized by Google

The plaintiff at the time excepted severally to each of the following conclusions of law, to wit, the second, third, fourth, and fifth. The plaintiff also excepted to the finding that it was the duty of the plaintiff to see that a summons in error was served upon Grubbs, and that it was negligent in that regard.

John H. Collins, for plaintiff in error.

Geo. K. Nash, for defendants in error.

Before TAFT and LURTON, Circuit Judges, and HAMMOND, J.

TAFT, Circuit Judge (after stating the facts). Certain of the findings of fact of the circuit court are really findings of law. Thus, the court found that, as matter of law, it was the duty of the clerk to receive and file the petition in error and præcipe. The court found as matter of law that it was the duty of the attorney to supervise the action of the clerk in filing the petition and the præcipe and issuing summons thereon. The court found, as matter of fact that the clerk did not file the præcipe, and did not issue summons; and that, after handing the clerk the petition and præcipe, the plaintiff paid no further attention to the same. As a further fact the court found that the loss resulted from the failure of the clerk to issue the summons, and of the plaintiff's attorney to supervise his doing so; that is, from the concurring negligence of both the clerk and the plaintiff's attorney. The plaintiff excepted to the finding that it was the duty of the plaintiff or its attorney to see that the summons was served, or that it was negligent in this regard. If it was not plaintiff's duty to supervise the clerk's performance of his duty, then there was no negligence on plaintiff's part, and the finding that the loss was occasioned by plaintiff's supervising or concurring negligence was erroneous. We have presented, therefore, on this record, for review, the question whether, in a suit for neglect and default by the clerk in issuing summons on a præcipe, it is a defense that the plaintiff did not, after handing the præcipe to the clerk, give attention to the clerk's performance of his duty, and see to it that it had been performed. It is true that the findings of law and fact are hardly responsive to the issues raised upon the pleadings, but, as no objections and exceptions to the introduction of evidence were preserved for our consideration, we may properly assume that the evidence upon which the findings were made was introduced without objection, and that the court then proceeded, as it had the right to do under the rules of code pleading in Ohio, to hear and decide the case on the issues made by the evidence, rather than upon the pleadings. Railway Co. v. Whitcomb, 31 U. S. App. 374, 381, 14 C. C. A. 183, and 66 Fed. 915; Hoffman v. Gordon, 15 Ohio St. 211, 218.

Was it the duty of plaintiff to see to it that the clerk issued the summons, or had he the right to rely on the clerk's doing his duty? Or, to put it in another way, can the clerk excuse his default by saying, "You ought to have anticipated my negligence and provided against it"? We think that the questions must be answered by a consideration of the provisions of the Ohio Code of Practice and the decisions under it. Section 6713 of the Revised Statutes of Ohio provides that proceedings to reverse a judgment shall be by petition in error, filed in the court of error; that "thereupon a summons shall

Digitized by Google

issue and be served, or publication made, as in the commencement of an action, and a service on the attorney of record in the original case shall be sufficient." Section 6714 provides that: "The summons mentioned in the last section shall, upon the written præcipe of the plaintiff in error or his attorney, be issued by the clerk of the court in which the petition is filed, to the sheriff of any county in which the defendant in error or his attorney of record is found; when the writ is issued to a foreign county, the sheriff thereof may return it by mail to the clerk and shall be entitled to the same fees as if it had been returnable to the court of common pleas in which such officer resides; and the defendant in error or his attorney, may waive in writing the issue or service of the summons." Under the title "Procedure in the Courts of Common Pleas and Superior Courts and in Circuit Courts on Appeals," the specific duties of certain officers are prescribed. By section 4959 it is required that "all writs and orders for provisional remedies and process of every kind shall be issued by the clerks of the several courts; but before they are issued a præcipe shall be filed with the clerk demanding the same." This provision appeared in the statutes of Ohio as early as 1824. In State v. Caffee, 6 Ohio, 150, the supreme court of the state held that "no clerk is bound to issue process without a præcipe in writing filed as his authority and indemnity." By section 4958 he is required to enter the issue of a summons, and to record in full the return thereon. By section 4960 the clerk is required to "file together and carefully preserve in his office all papers delivered to him for that purpose in every action and proceeding." And it has been decided by the supreme court of Ohio that a paper is considered filed when delivered to and received by the proper officer. King v. Penn, 43 Ohio St. 57, 1 N. E. 84. By section 4966 the sheriff is required to indorse upon every writ or order the day and hour it was received by him; and by section 4970 to execute every summons, order, or other process, and return the same as required by law. By section 4967, when the sheriff is interested in an action, the process is to be served by the coroner. By section 6713, already quoted, it is provided that summons in error shall issue as in the commencement of an action. Hence the proceedings to begin an action are in pari materia with those beginning suits in error. By section 5035 a civil action is to be "commenced by filing in the office of the clerk of the proper court a petition and causing a summons to be issued thereon." Section 5036 requires that "the plaintiff shall also file with the clerk of the court a præcipe stating therein the names of the parties to the action, and demanding that a summons issue." Section 5037 provides that "the summons shall be issued and signed by the clerk, and be under the seal of the court from which it is issued; * * * it shall be directed to the sheriff of the county who shall be commanded therein to notify the defendant that he has been sued and must answer at a time stated therein." Section 5041 provides that the summons shall be served by the officer to whom it is directed. Section 5043 provides that an acknowledgment on the back of the summons or petition by the party sued, or the voluntary appearance of a defendant, is equivalent to service.

Digitized by Google

We have thus reviewed at some length the statutory requirements in Ohio for the beginning of original suits and for the beginning of suits in error, and those which describe the exact duties of the officers. We may take judicial notice of what the actual practice under these statutes is. The language of the statutes, and the actual practice, leave no doubt in our minds that the policy of the state of Ohio from the beginning has been to have process issued and served by a public officer, indifferent between the parties, and not to leave it to the agent of the party plaintiff, as in so many other states. It is the clerk's duty to issue the process to the sheriff; it is the sheriff's duty to serve it, and return it to the clerk; it is the clerk's duty to receive the return and record it. The whole machinery is put in motion by the præcipe of the moving party to the action, but after that, the law provides no place for the intervention of the party. We think this elaborate and detailed provision for the machinery of service and return was for the very purpose of relieving the private party who should properly set it in motion from any responsibility as to its due operation, and that thereafter he has the right to rely on the public officer's performing his duty, secured as it is by his oath and official bond. It is a well-known maxim of the law of evidence that, as between private individuals, negligence is not to be presumed. A fortiori, is one not at fault in presuming that a public officer, under the obligation of his oath and bond, with his duties exactly and minutely fixed by positive law, will not fail to discharge them. He may rightly act on that presumption. Some reference is made in the finding to a common practice among attorneys for plaintiffs in error of procuring from the attorneys for defendants in error a waiver of summons, but we cannot see how this affects the question before us. Certainly, the regular mode of bringing a defendant in error within the jurisdiction in error is by causing summons to issue and to be served. The other mode is only available by consent of the opposing party. When no such consent is shown, can a charge of negligence be predicated on a pursuit of a remedy not dependent on such consent? Clearly not. Nor does the fact that the plaintiff or his attorney must generally be an active agent in procuring a written waiver of summons tend in the slightest degree to show that such agency is either required of them or is customary in the issue, service, or return of the summons in the regular way. Hence we are not satisfied with the view that the failure of the Baltimore & Ohio Company to stand over the clerk and see that he did his duty was negligence contributing to the subsequent loss. In an action against the clerk for his default, we think it can hardly lie in his mouth to say to the plaintiff, "Yes, I was negligent; but you ought to have anticipated that I would be negligent, and to have watched me in my work, and spurred me to do my duty." In the case of Louisville & N. R. Co. v. East Tennessee, V. & G. Ry. Co., 22 U. S. App. 102, 109, 9 C. C. A. 314, 60 Fed. 993, the train of one company crashed through the train of another standing on the crossing of the two lines. The former sought to escape liability on the ground that the latter was guilty of negligence in allowing its train to stand on the crossing. It was in evidence that there was an

Digitized by Google

agreement between the companies that the passenger trains of each might occupy the crossing while unloading baggage. It further appeared that a statute of the state required each company to stop its train 50 feet before reaching the crossing. We held that the plaintiff company was not guilty of contributory negligence relieving the defendant from liability. We said (page 109, 22 U. S. App., page 317, 9 C. C. A., and page 995, 60 Fed.):

"Was it negligence, as between the two companies, for the one to rely on the other's compliance with the statute, and its tacit agreement? It seems to us clear that it was not. It does not lie in the mouth of the Louisville Company, after consenting that the Cincinnati Company should put its train in a place not dangerous except through the negligence of the Louisville Company, to say that the Cincinnati Company was wanting in due care in reposing such invited confidence. It is not negligence, ordinarily, for one to act on the theory that another will comply with his statutory duty, unless there is some reason for thinking otherwise. Jetter v. Railroad Co., 41* N. Y. 154; Baker v. Pendergast, 32 Ohio St. 494; Railroad Co. v. Schneider, 45 Ohio St. 678, 699, 17 N. E. 321; Stapley v. Railway Co., L. R. 1 Exch. 21. Still less can the charge of contributory negligence be made by one who invited or consented to the action, and thereby impliedly agreed that it should be attended with no danger from him."

We think the principle of these cases applicable in the cause before us. The railway company here could rely not only on the statutory obligation of defendant to issue the summons, but also on something that very nearly resembled a contract obligation implied in the condition of defendant's official bond. In such a case, to hold that a failure of the obligee actively to prevent a default by the obligor will defeat recovery on the obligation, is to render the latter a worthless protection. With deference to the views of our colleague, Judge HAMMOND, who differs from the majority of court on this point, we do not think that any of the cases relied on by him apply to the one before us. That which, on its face, most nearly resembles this, is Curlewis v. Broad, 1 Hurl. & C. 322. The suit was for damages against a process server whom plaintiff had employed to serve a summons according to the procedure act for failing to indorse the writ as required by the act. There was a plea that the defendant was not instructed to indorse the writ as required by the statute, and that he was not retained to do more than serve the writ, and was not requested to make the indorsement. There was a demurrer to the plea, and joinder therein. The section of the statute relied on enacted that "the person serving the writ of summons shall and he is hereby required within three days at least after such service to endorse on the writ the day of the month and week of the service thereof, otherwise the plaintiff shall not be at liberty, in case of nonappearance to proceed under the act." The plea was held good, and the plaintiff was given leave to reply. There was no formal judgment, but from the remarks of the barons arguendo it is to be inferred that the conclusion was founded on the view that the process server was not a public officer charged with certain statutory duties, but was a mere private agent of the plaintiff's attorney, to do what he was told to do; that the measure of the server's duty was his instructions, and not the statutory requirement as to how the writ should be served; that the statute measured the responsibility of the attorney, whose duty it was, through his private agents, selected as

Digitized by Google

he chose, to see that the writ was properly served. The case, in effect, holds that the server would be liable if he had been instructed to indorse the writ and did not do so. How this bears upon the case at bar, it is difficult to see. Under the mode of procedure in the case cited it was the plaintiff's duty, or that of his attorney, to serve the summons; and he might procure the service to be done by any one, —as one of the judges suggests, by a school boy. Under the Ohio statute, the writ must be issued by the clerk, who is not plaintiff's agent, but a public officer; and it must be served by a sheriff, or one of his general or special deputies. Their duties are fixed by statute, not by private agreement. The case of McRaney v. Coulter, 39 Miss. 390, is the strongest one for the view of Judge HAMMOND. There the court held it was a want of due diligence in an attorney not to read the minutes of the clerk to see that he had properly entered an order granting a motion for new trial. As to this authority, we have only to say that, if it lays down a proper measure of an attorney's care, there are few, if any, careful attorneys within the jurisdiction of this court.

We come now to the question of damages. Upon this point we are all agreed, and Judge HAMMOND states in his opinion more fully than it is proposed here to state them the reasons for our conclusion. The defendant deprived the plaintiff of its legal right to contest the question of its liability to another for $2,130 in a court of error. What is that right worth? Really its value depends on the probability of a reversal, and the successful event of a new trial. Ordinarily, on a proceeding in error, the judgment of the court below is presumed to be correct until it is shown otherwise. Can the clerk who negligently prevented the proceeding in error rely on that presumption to escape being mulcted in damages for depriving the plaintiff in error of the privilege and right of meeting and overcoming it? We think not. There is but one case in point, and that only a nisi prius ruling. In Cohen v. Marchant, 1 Disney, 113, the action was against a justice of the peace for failing to date properly the appeal bond, whereby the right of appeal was lost. Judge Storer told the jury that they might measure the damage by the amount of the judgment. It is a rule in actions for negligence in issuing execution on a judgment, or for negligence in allowing the escape of one whose body is taken in execution, that the amount of injury is prima facie measured by the face of the judgment, and that the burden is on the negligent officer to reduce the recovery by showing the insolvency of the defendant. Carpenter v. Warner, 38 Ohio St. 416. As against a public officer who negligently deprives another of his right to be heard in a suit against him, we think the same rule of evidence should prevail, and that the plaintiff should be entitled to recover all that the negligence of the defendant has caused him to pay unless the officer can show that, even if he had not been negligent, the complaining litigant would have had ultimately to pay the same amount. In order to do this, the defendant may be obliged to submit to the court the record in the first case, to decide whether there was reversible error, and also to adduce evidence to show that on a second trial a second verdict of the same or greater amount

Digitized by Google

would have been rendered against the plaintiff. The anomalies will then be presented of having one nisi prius court review the errors of another, and of having one jury decide what conclusion another jury would have reached on a given state of evidence; but these anomalies seem inherent in the nature of the controversy, unless it is to be held either that the damages are merely nominal, or that they are fixed at the amount of the judgment. The first alternative is to be avoided, if possible, because it practically gives the clerk complete immunity from what may be most serious and injurious consequences of his neglect; while the second can hardly be adopted by a court, because it would seem to be judicial legislation, fixing a penalty for default, and not the assessment of damages according to the reason or analogy of damages in like cases. We are not, however, in the case at bar, called upon to state definitely the limits within which the defendant in such cases may introduce evidence in mitigation of damages, because the defendant below introduced no evidence tending to reduce them. Indeed, the learned judge at the circuit found affirmatively that there was reversible error in the record, and there was no evidence tending to show that on a new trial a similar verdict would have been reached. Upon the findings of fact made by the court below, after rejecting the findings of law, which we have found to be erroneous, a judgment should have been entered for the plaintiff for the full amount paid by it on the judgment which it was prevented from reversing on error, together with costs and interest.

The judgment of the circuit court is reversed, with instructions to enter judgment on the findings in accordance with this opinion.

HAMMOND, J., dissents from the views of the court as to contributory negligence, and concurs with the court upon the question of damages.

(78 Fed. 596.)

TOWN OF DARLINGTON v. ATLANTIC TRUST CO.

(Circuit Court of Appeals, Fourth Circuit. January 14, 1897.)

No. 192.

MUNICIPAL CORPORATIONS—TAXATION—RAILWAY AID BONDS—SPECIAL FUND.

The charter of the town of D. authorized it to levy taxes, without limit, for the use of the town, and also provided that, if it should issue bonds in aid of a railroad, it might levy an additional tax, sufficient to pay the interest thereon, not exceeding 50 cents on the $100 of taxable property. *Held*, that the special fund which might be created by such additional tax was not the sole fund for the payment of interest on the bonds, but, such bonds and the coupons thereon being debts of the town, the holders thereof were entitled to payment out of the general funds of the town, after exhausting such special fund, and the levy of a tax sufficient to pay such debts might be compelled by mandamus.

In Error to the Circuit Court of the United States for the District of South Carolina.

Digitized by Google

On January 4, 1896, the Atlantic Trust Company, a corporation of New York, filed in the court below its petition for a mandamus against the town of Darlington, a corporation of South Carolina, alleging that on September 31, 1894, it had recovered in the said court, against the town of Darlington, a judgment for the sum of $6,873.60 and costs, the said judgment being for certain unpaid coupons due by the said town of Darlington; that demand had been made for the payment of the said judgment on the mayor and aldermen of the town, who failed and neglected to pay it; that there was no corporate property of said town subject to execution; that execution had been returned nulla bona; and that the petitioner had been unable to obtain payment of said judgment. The prayer was for a mandamus commanding the said town and the town council thereof to pay the judgment, interest and costs, and, if there were no sufficient funds in the treasury, then to levy a tax sufficient to raise the amount. The town of Darlington, in its return to the petition, for cause why the mandamus should not issue commanding a tax to be levied sufficient to pay the debt, set up that the coupons which were the cause of action upon which the judgment was recovered were interest coupons on bonds issued by the town of Darlington to aid in the construction of the Charleston, Sumter & Northern Railroad, in pursuance of an ordinance of the town passed under authority of an act of South Carolina amending the charter of the town, approved December 24, 1889; and that the town had no power to levy a tax for the payment of this debt, except a tax not exceeding 50 cents on each $100 of taxable property. The case came on to be heard upon the petition and answer, and the court ordered the mandamus to issue, directing that, at the time of the next annual town tax levy, there should be levied and collected, in the same manner as other taxes, a tax sufficient in amount to pay the judgment, interest, and costs. The town of Darlington then sued out this writ of error.

In entering its decree, the court (Judge Simonton) filed the following opinion (63 Fed. 76), which fully states all the additional facts:

"This is a petition for a mandamus. The petitioner, the Atlantic Trust Company, obtained in this court a verdict against the defendant, the town of Darlington, and entered up judgment in the sum of seven thousand one hundred and ten and 62-100 dollars. 63 Fed. 76; Id., 16 C. C. A. 28, 68 Fed. 849. Execution has been issued, and has been returned nulla bona. The officials of the defendant say that there is no money in the treasury to pay this debt. The causes of action on which judgment was obtained were coupons on bonds issued in aid of a railroad company. The plaintiff in execution now prays 'that a writ of mandamus may issue against the said town of Darlington, and against the city council thereof, commanding them to pay forthwith to the petitioner the amount due on said judgment, with interest and costs, and, in the event that there are at the present time no funds in the treasury of the said town of Darlington sufficient for that purpose, that the said town be ordered and directed by said writ to levy a sufficient tax upon the property of the said town for the purpose of raising an amount sufficient to pay said judgment and interest thereon and costs.' This is the proper course in a case of this character, the mandamus being in the nature of an execution. Chanute City v. Trader, 132 U. S. 210, 10 Sup. Ct. 67.

"The answer of the defendant in execution sets up several defenses. At the hearing, these were abandoned except one. That is that under its charter the town of Darlington has power to levy but fifty cents on each one hundred dollars of the real and personal property assessed for and liable to taxation to pay interest on bonds issued in aid of railroads. It has been assumed, and it seems conceded, without, however, a statement of the figures, that such a levy would not pay this debt. The sole question in the case, then, is: Is the town of Darlington, by its charter, limited to the levy of an annual tax of fifty cents on each one hundred dollars of taxable property, for the purpose of paying interest on bonds issued in aid of railroads? The charter of this town is found in 18 St. at Large S. C. p. 923. In this act this section occurs: 'Sec. 16. That the mayor and aldermen shall have the power and authority to impose taxes each year for the use of said town, that is to say, not exceeding fifty cents on each one hundred dollars worth of real and personal property being in the limits of said town, except the property of churches, charitable associations and institutions of learning. The value of such real and personal property, for the purpose of taxation, shall be fixed and assessed as hereinafter provided.' The twenty-ninth section of the same act au-

Digitized by Google

thorized the mayor and aldermen, upon being authorized thereto by a majority vote of the said town, to borrow money for the purpose of internal improvements, and to issue bonds or scrip therefor, at an interest not exceeding 7 per cent. per annum, and payable out of the taxes and income of the town. In 1889 (20 St. at Large, p. 504) this act was amended. In the sixteenth section was inserted a proviso as follows: 'Provided, that if the said mayor and aldermen should hereafter issue bonds for the purpose of aiding in the construction of railroads, then they may impose an additional tax to raise a sufficient amount to pay the interest on said bonds, which additional tax shall not exceed fifty cents on each one hundred dollars worth of real or personal property as above provided;' the concluding words of the sixteenth section, 'The value of such real and personal property,' etc., being retained. The twenty-ninth section was amended also, after the clause permitting the borrowing of money for internal improvements, and the issuing of bonds or scrip therefor, by the insertion of a proviso: 'Said principal of bonds and scrip shall at no time exceed $5,000, except for the purpose of aiding in the construction of railroads and for that purpose the said mayor and aldermen may issue bonds or scrip in any amount.' Note that this authority to borrow was for internal improvement, limited as to all other modes of internal improvement to $5,000, without limit as to railroads; thus recognizing railroads as in the class of internal improvements. The bonds to which the coupons in this case belonged were issued after the passage of this amendment. In 1891 this charter was again amended in several particulars. Those only requiring notice are these: Section 16 was amended in a peculiar way. The third section of the act declares: 'In section 16 strike out after the word town on 3rd line the words "that is to say not exceeding fifty cents on each one hundred dollars worth of," and insert instead thereof the words "on all." So that said section as amended will read: "Sec. 16. That the said mayor and aldermen shall have the power and authority to impose taxes each year for the use of the town on all real and personal property being in the limits of the town, except the property of churches, charitable associations and institutions of learning. The value of such real and personal property for the purpose of taxation shall be fixed and assessed as hereinafter provided."' It will be observed that this section is precisely like the original section 16 in the charter, except that the power of taxation is unlimited, and not confined to fifty cents on the hundred dollars. No notice whatever is taken of the act of 1889 and the proviso attached by it to this section. Indeed, the act of 1891 proposes to amend act of 1884, saying nothing of act of 1889.

"If it be concluded that, by the operation of the amending act of 1889, section 16 was eliminated from the act of 1884, and section 16 as amended inserted in lieu thereof, and that, by the operation of the amending act of 1891, section 16 of the charter reads as if in the act of 1891, this would end this question. Under the act of 1891, the town council would have unlimited power of taxation, with no reference to railroads or any restriction thereon. There is much to be said in favor of this construction. The act of 1889 was intended to authorize the issue of bonds in aid of railroads, and applied to such bonds thereafter issued as an inducement to their purchase. The bonds were issued to an amount which exhausted the constitutional limit. At the time of the passage of the act of 1891 there was no necessity of this kind for the special railroad tax, and this act withdrew all restriction on the taxing power for the use—not the uses—of the town. The twenty-ninth section of the act of 1884 recognizes that bonds in aid of railroads are for the purposes of internal improvement of the town, and makes them payable out of the taxes and income of the town. In addition to this, it will be seen by an inspection of section 16, as amended in the act of 1891, it concludes with the concluding sentence of the acts of 1884 and 1889 complete, leaving out the limitation of the power to tax and the proviso also. But this construction may be doubtful. The act of 1891 does not repeal the act of 1889 in express terms. There are no repealing words in the statute. Repeal by implication is not resorted to except in cases of absolute necessity or patent inconsistency. Chew Heong v. U. S., 112 U. S. 536, 5 Sup. Ct. 255; Chicago, M. & St. P. Ry. Co. v. U. S., 127 U. S. 406, 8 Sup. Ct. 1194.

"It is not unreasonable to suppose that the legislature treated the charter of this town as containing a section 16, changed from its original language by the addition of the proviso with regard to bonds issued in aid of railroads, and that by the act of 1891 its purpose was simply to remove the restriction of the power to tax from

Digitized by Google

fifty cents on the hundred dollars, and to substitute therefor unlimited power to tax; that, this being its purpose, it repeated only so much of amended section 16 as was changed, to show the change. We would then read the section as follows: 'That the said mayor and aldermen shall have the power and authority to impose taxes each year for the use of said town on all real and personal property being in the limits of said town, except the property of churches, charitable associations and institutions of learning: provided that if the said mayor and aldermen should hereafter issue bonds for the purpose of aiding in the construction of railroads, then they may impose an additional tax to raise a sufficient amount to pay interest on said bonds, which additional tax shall not exceed fifty cents on each one hundred dollars worth of real and personal property as above provided. The value of said real and personal property for the purpose of taxation, shall be fixed and assessed as hereinafter provided.' It may be noticed here that this act provides for an annual tax for the use of the town and for bonds in aid of railroads, the money to be raised and expended annually. So the provision clearly is for the annual or current interest. This view is strengthened by the limitation. The constitution limits this power of subscription to eight per cent. on the taxable values of the municipality. Public bonds draw six per cent. interest usually. Six per cent. interest on eight per cent. of taxable value is forty-eight cents on the one hundred dollars. Provision is thus made for the annual necessities of the town. If the provision is not acted upon, and the annual increment of interest is passed, then the past-due interest becomes a debt of the town, not to be provided for by the special annual tax, but by the provision made for raising money for the use of the town, an important use being the payment of its debts.

"The first question is: Is this provision for levy of a tax to pay interest on the bonds in aid of railroads the creation of a fund from which such interest shall be paid, involving the idea that it cannot be paid out of any other funds? There is no such provision in the act, and none can be fairly implied. The language of section 29, Acts 1889 (20 St. at Large, p. 504), is this: 'The mayor and aldermen may for the purpose of internal improvements borrow money, issue bonds or scrip therefor, bearing not a greater interest than seven per cent., payable at such times as they may think advisable, and payable out of the taxes and income of said town,' out of the taxes and income without qualification. Then comes the proviso, limiting amount for all other internal improvements except aid in the construction of railroads to $5,000, and, for the latter purpose, putting no limit, but making no other change. So, in the proviso to sixteenth section, if said mayor and aldermen should hereafter issue bonds for the purpose of aiding in the construction of railroads, then they may (not shall) impose (not a special tax, but) an additional tax to raise a sufficient amount to pay the interest, etc. It is very clear that, if the taxes and income could pay this interest without resort to an additional tax, such tax need not be levied, or, if such interest could be paid in part without such additional tax, only so much of the additional could be levied to meet the deficiency. In other words, this additional tax is additional security. It is no uncommon thing in legislation to provide a particular fund as additional security for the payment of a debt. See U. S. v. Clark Co., 96 U. S. 214.

"Macon Co. v. Huidekoper, 134 U. S. 332, 10 Sup. Ct. 491, is a case on all fours with the present case. Huidekoper obtained a judgment on interest coupons of railroad bonds against Macon county. It was not paid. Under the mandate of the court, a warrant was issued upon the treasurer of the county for the amount of the judgment. It was presented for payment to the treasurer of the county, and payment refused for want of funds. The act incorporating the railroad company in whose aid the county bonds were issued authorized any city or town or the county court of any county to subscribe to the capital stock of this railroad company, and to issue bonds therefor, and to levy a tax to pay the same, not exceeding one-twentieth of one per cent. upon the assessed value of the taxable property for each year. The law of Missouri authorized the county court to levy and collect annually a tax of fifty cents on the one hundred dollars, in addition to this one-twentieth of one per cent. for the railroad bonds. The one-twentieth of one per cent. could not pay the judgment. The county authorities had not exhausted their power to tax for county purposes. The general tax levy being less than fifty cents on the one hundred dollars, a mandamus was asked for requiring them to levy a tax up to their limit, and to apply the proceeds of the levy, among other things, to this judgment. The court held that, after the application of the

Digitized by Google

special tax of one-twentieth of one per cent. to the amount due on the judgment, the balance due thereon stood on the same footing as any other liability of the county, to be paid out of its general funds. U. S. v. Clark Co., 96 U. S. 211; Knox County Court v. U. S., 109 U. S. 229, 3 Sup. Ct. 131; Macon Co. v. Huidekoper, 134 U. S. 336, 10 Sup. Ct. 491. The levy was ordered.

"Accepting, then, the construction of the act contended for by the town of Darlington, it would seem that under the operation of the act of 1889, if the proceeds of the additional railroad tax were not sufficient to pay the sum due on the coupons, the court would order the money to be paid out of the fund derivable from taxes, and, if the town council had not exhausted their power under that act, it would compel them to go to their limit. But under the act of 1891 there is now no limit. The court, then, can order them, in making a levy, to provide for the sum due on this judgment, and this notwithstanding that the act of 1891 was passed after the bonds were issued. County Court v. Hill, 118 U. S. 71, 6 Sup. Ct. 951. Let the mandamus issue as prayed."

J. E. Burke, for plaintiff in error.

Augustine T. Smythe, for defendant in error.

Before GOFF, Circuit Judge, and MORRIS and BRAWLEY, District Judges.

PER CURIAM. We are entirely satisfied of the correctness of the reasoning and conclusions of the learned judge of the court below, and that the petitioner is entitled to the mandamus for which it prayed.

By the act of 1891 the mayor and aldermen of the town of Darlington were given power to levy taxes without limitation for the use of the town, so that there is no question of the power to levy the tax directed by the writ. The only question is as to the petitioner's right to have it levied to pay the judgment recovered on the coupons of its bonds. This question is settled by U. S. v. Clark Co., 96 U. S. 211, which was followed in Knox County Court v. U. S., 109 U. S. 229, 3 Sup. Ct. 131, and in Macon Co. v. Huidekoper, 134 U. S. 332, 10 Sup. Ct. 491, which cases hold that bonds and coupons of the kind sued upon by the petitioner are debts of the towns and counties issuing them, and that the holders are entitled to payment out of the general funds of the town or county raised for general use, after exhausting the special fund directed to be levied for their payment, and that, where the town or county has the power to levy a tax sufficient to pay such a debt, it may be compelled to do so by mandamus. The judgment is affirmed.

(78 Fed. 610.)

HARDY v. SHEDDEN CO., Limited.

(Circuit Court of Appeals, Sixth Circuit. February 2, 1897.)

No. 431.

1. MASTER AND SERVANT—DANGEROUS PREMISES OR MACHINERY—KNOWLEDGE OF SERVANT—NEGLIGENCE OF THIRD PERSONS.

A servant has the right to rely on the master's taking due care to give him a safe place and safe instruments with which to do his work, provided, in the exercise of reasonable care on his part, he does not discover any defect himself. But where, in the course of the employment, the acts of third persons, not in the same employment, may increase the danger of the service, and

Digitized by Google

these acts and their character are under the eye of the servant, and, to the servant's knowledge, are not subject to the supervision of the master, the master is not liable if injury results from the negligence of the third persons.

2. SAME.

Plaintiff was employed by defendant as driver of a truck. The officers of a grand army post hired the truck, with driver and horses, for the purpose of erecting on it a superstructure on which a number of young girls were to ride in a Decoration Day procession. The superstructure was built and placed on the truck by the officers of the post, and was not seen by defendant. In placing it on the truck, a railing intended for the security of the driver was removed, and plaintiff was obliged to sit with his legs hanging over the front of the truck, very near the horses. While driving in this manner, a jolt, occasioned by driving into a rut, caused the superstructure to fall forward upon plaintiff, and throw him under the horses' feet, whereby he was injured. *Held*, that defendant, plaintiff's employer, was not liable for the injury so caused.

3. SAME.

Held, further, that plaintiff, though the general servant of defendant, was in this service the special servant of the grand army post, and it, and not defendant, was liable as master for any negligence in the construction of the superstructure which he was to use in his work.

In Error to the Circuit Court of the United States for the Eastern District of Michigan.

Jay P. Lee, for plaintiff in error.
L. C. Stanley, for defendant in error.

Before TAFT and LURTON, Circuit Judges, and SAGE, District Judge.

TAFT, Circuit Judge. This is a proceeding in error to review a judgment for the defendant entered by the circuit court of the United States for the Eastern district of Michigan in a suit for damages for personal injury. William Hardy, the plaintiff in error, and the plaintiff below, was employed by the Shedden Company, the defendant below, and the defendant in error, as a driver of one of its trucks. The business of the defendant was managed by one William Anderson. On the 28th of May, 1891, two officers of the Grand Army of the Republic post at Lansing visited Anderson, and made a contract with him by which he agreed to let them have for two days one of his trucks, upon which they proposed to build a superstructure of seats, to be occupied by young girls in a Decoration Day procession to be held on the 30th of May following, and further agreed to send two of his drivers, with four horses, to haul the truck, thus loaded, in the procession. The superstructure was erected by mechanics, members of the Grand Army of the Republic post. Anderson had nothing to do either with furnishing the material or with supervising the work, and did not see the structure until after the accident about to be related. On the morning of the 30th, Anderson directed the plaintiff and another one of his drivers to take four horses, and hitch them to the truck, and to draw the truck to and from the cemetery to which the procession was going, under the direction of the executive committee of the grand army. The plaintiff knew that Anderson had nothing to do with the building of the superstructure, and thought correctly, as he says, "that the grand army folks had taken care of that." The superstructure had been placed

Digitized by Google

upon an old truck lent for the purpose by the defendant. Upon the day of the procession the superstructure was changed from the old truck to the one usually driven by Hardy, and the railing or guard which was attached to Hardy's truck as a protection, and something against which he could brace himself, was removed by the G. A. R. men in order to make room for the temporary structure of seats. It does not appear that Anderson knew that this railing had been removed. The size of the structure and the number of young girls carried required that the two drivers, one driving one team and the other the other, should sit forward on the truck, with their legs dangling very near to the tails of the horses of the rear team. They drove out to the cemetery, taking the route directed by the executive committee. As they came in sight of the cemetery, they drove into a rut in the road of a depth of from 6 to 12 inches. The jolt thus occasioned broke down the superstructure, and precipitated it against the drivers, who were just in front of it, threw them under the horses' feet, and frightened the horses into a run. The plaintiff was very severely injured, and his leg had to be amputated. At the close of the evidence of the defendant, the court below directed a verdict for the defendant on the ground that the defendant's obligation did not extend further than to see to it that the men employed in erecting the superstructure upon the truck were capable and skillful workmen, and that, as all the evidence tended to show that they were of this character, the plaintiff had failed to make a case justifying its submission to the jury.

We are of opinion that the jury was properly instructed, but we do not concur in the reason given by the court. It is well settled that a master is under an implied obligation to the servant to furnish him a reasonably safe place in which to render the services for which he is employed. But this obligation is not absolute, and circumstances may vary it. Where a driver is employed to drive a truck, he has the right to rely on the master taking due care to give him a safe truck, and a safe seat thereon upon which to ride, provided, in the exercise of reasonable care on his part, he does not discover any defect himself. But where, in the course of the employment, the acts of third persons, not employed by the master, may increase the danger of the service, and these acts and their character are under the eye of the servant, and, to the servant's knowledge, are not under the supervision of the master, we do not think the master is liable if injury results to the servant from the negligence of the third persons. For instance, where a servant is directed to take his truck to a distant point, and from there obtain a load of merchandise to be put on by the servants of the third person, and the merchandise is loaded so carelessly that in the return journey the driver suffers an injury from the defective loading, it seems clear to us that he cannot hold his master liable therefor. This is the law, because it is reason. Where the servant has greater opportunity than the master to know and observe the probable results from the acts of the third person, of which the master, to the knowledge of the servant, has had no opportunity to judge, then it is unreasonable to hold that, with respect to such acts, the master has any obliga-

Digitized by Google

tion to the servant. Of course, there are cases where the circumstances necessarily impose on the master the duty of supervising and inspecting the work of third persons which may subject the servant to risk and danger. Thus the loading of cars on a railway line is usually inspected by a railway inspector before it is received. But where there is no such inspection, and where, in the nature of things, there cannot be, the servant cannot hold the master for the work of third persons. The defendant company, it is conceded, had nothing whatever to do with the materials or the plan of construction of the temporary platform. The company did not supervise it, and it was not intended by the grand army people that it should. The plaintiff below admits that he had no reason to believe that the superintendent of the company had taken any part in the erection or supervision of this structure. How, then, could he rely on an implied obligation that the master would see to it that this structure was not dangerous? He knew that the members of the grand army post were engaged in erecting it, and that he must rely upon their skill and care, rather than upon that of his master. We do not think the case would be different had he been directed to take his truck to the headquarters of the grand army post, and there had taken on board his truck a large number of girls or young women having with them camp stools or chairs upon which to sit. In such a case it is conceivable that the load might be so arranged by the executive committee as to cause an accident similar to the one shown here. The injury resulting would be caused by the members of the executive committee of the grand army post, and to them alone would the injured driver have to look.

We are further of opinion that this case comes within the class of cases of which Nason's Adm'r v. Railroad Co., 22 U. S. App. 220, 9 C. C. A. 666, and 61 Fed. 605, is one. In that case a railroad company had rented to a bridge company its engine, its engineer, and its fireman, and while it was doing the business of the bridge company the plaintiff was injured through the negligence of the engineer. It was held that the railroad company, the owner of the engine, and the original employer of the engineer, could not be held liable for the injury, because, though the engineer was the general servant of the railroad company, at the time he was engaged in the business of the bridge company. A number of cases were cited to sustain this view. Donovan v. Construction Syndicate [1893] 1 Q. B. 629; Rourke v. Colliery Co., 2 C. P. Div. 205; Powell v. Construction Co., 88 Tenn. 692, 13 S. W. 691; Miller v. Railway Co., 76 Iowa, 655, 39 N. W. 188. We do not see why the principle of these cases has not application as well to suits by injured servants against the general master as to suits by third persons against him. In the light of these cases the driver, the plaintiff below, though the general servant of the defendant, the Shedden Company, was doing the business of the grand army post, and was engaged as a special servant in its employ. In so far as the grand army post superintended the construction of that which went to make up the place in which the driver was to discharge his duties, to that extent the grand army post was liable to him

Digitized by Google

for the injury resulting from their negligence, and his general master, the Shedden Company, was not. It is true that it is held in Little v. Hackett, 116 U. S. 366, 372, 380, 6 Sup. Ct. 391, in Laugher v. Pointer, 5 Barn. & C. 547, and Quarman v. Burnett, 6 Mees. & W. 499, 507, that where a man lets out a carriage on hire to another he in no sense places the coachman under the control of the hirer, except that the latter may indicate the destination to which he wishes to be driven. But the present, we think, is clearly distinguishable from such a case, because here was not the ordinary hiring of a carriage for a trip, but it was the hiring of a truck to be built upon, so that its nature as a vehicle was changed, and then a separate hiring of the means of locomotion. This did, in our opinion, place the drivers under the control of the executive committee of the grand army post, and made that post, for the time being, the master of the driver. To it, therefore, must the driver look for indemnity for any injury suffered by him through the negligence of the post in altering and loading the truck. The judgment of the circuit court is affirmed.

(78 Fed. 620.)

HAHN v. ERHARDT, Collector.

(Circuit Court of Appeals, Second Circuit. February 1, 1897.)

CUSTOMS DUTIES—CLASSIFICATION—PROTEST—SIMILITUDE CLAUSE—PRECIOUS STONES.

When an importer intends to rely upon the similitude clause of the tariff act for the purpose of identifying his merchandise with some enumerated article of the tariff schedules, and means to place his objection to the action of the collector on the ground that the collector has not given due effect to that provision, he should state the fact in his protest; and, if he fails to do so, his objection is not stated distinctly and specifically, within the meaning of the statute. Accordingly, *held*, that a protest, claiming that the articles in question were dutiable under the provision of the tariff act imposing a duty on precious stones, was insufficient to raise the question whether such articles should have been classified as precious stones by force of the similitude provision of the act.

Appeal from the Circuit Court of the United States for the Southern District of New York.

Comstock & Brown (Everit Brown, of counsel), for plaintiff in error.

Wallace Macfarlane, U. S. Atty., and James T. Van Rensselaer, Asst. U. S. Atty., for defendant in error.

Before WALLACE and SHIPMAN, Circuit Judges.

WALLACE, Circuit Judge. This is an action to recover duties alleged to have been illegally exacted by the defendant, as collector of the port of New York, upon certain importations made by the plaintiff in the year 1889, consisting of cane heads, paper cutters, glove-hook handles, paper weights, etc., composed, some of rock crystal, some of agate, and others of onyx. The articles were classified by the collector and subjected to duty under that provision of the tariff act of March 3, 1883, prescribing that there should be

Digitized by Google

levied, collected, and paid on the importation of "all articles manufactured, in whole or in part, not herein enumerated or provided for, a duty of 20 per centum ad valorem." The ground of objection specified in the protest of the plaintiff was that the articles were dutiable under that provision of the act subjecting to a duty of 10 per cent. ad valorem "precious stones of all kinds." Upon the trial the plaintiff offered evidence for the purpose of showing "that the articles in suit were substantially similar in their material, in their quality, in their texture, and in the uses to which they may be applied, or in some one or more of these particulars, to the general class of articles known in trade and commerce at and prior to March 3, 1883, as "precious stones." The court excluded the evidence upon the objection that the protest was insufficient to authorize a recovery under the similitude provision of the tariff act. The ruling was duly excepted to, and its correctness is challenged by the assignments of error.

The case presents the single question whether, under such a protest, the importer could be permitted to claim that the duties were erroneously exacted because his importations should have been classified as precious stones by force of the similitude provision of the tariff act.

The statute which precludes an importer from recovering duties which have been erroneously exacted, unless he has made a protest in writing, "setting forth distinctly and specifically the grounds of objection," has always been construed as requiring the objection to be so distinct and specific as to advise the collector exactly what the error complained of is. "Technical precision is not required, but the objections must be so distinct and specific as, when fairly construed, to show that the objection taken at the trial was at the time in the mind of the importer, and that it was sufficient to notify the collector of its true nature and character, to the end that he might ascertain the precise facts, and have an opportunity to correct the mistake and cure the defect, if it was one which could be obviated." Davies v. Arthur, 96 U. S. 148.

The similitude provision is intended to prescribe the duty to which articles are to be subjected that have been omitted in the enumeration of dutiable articles in the schedules of the tariff laws. It has no application when the imported article can be identified with any of those described in any of the schedules. If the importer asserts in his protest that his merchandise belongs to the category of enumerated articles, he asserts by implication that its dutiable character is not to be ascertained by reference to the similitude provision.

The similitude provision creates a test or criterion for ascertaining whether, although the article is not enumerated, it is nevertheless better capable of indentification by reason of similarity in one or more specified particulars with some one rather than with any other enumerated article, and subjects it to the same rate of duty imposed upon the enumerated article which it most resembles. In one sense, it is a rule of construction for the guidance of customs officers; but its application always involves an inquiry of fact,—the determination of the question, depending more or less upon expert

Digitized by Google

knowledge, whether, in material, in quality, in texture, or in the use to which it is to be applied, the article more nearly resembles one enumerated article than another.

The protest in the present case would naturally lead the collector to inquire whether the importations were "precious stones," in the commercial acceptation of that term; and certainly it would not give him notice that the importer intended to claim that, although they were not precious stones, yet, because they were of the same material, or because they were capable of the same use, they more nearly assimilated to precious stones than to any other enumerated article.

We conclude that in all cases in which the importer intends to rely upon the similitude clause for the purpose of identifying his merchandise with some enumerated article of the tariff schedules, and means to place his objection to the action of the collector upon the ground that the collector has not given due effect to that provision, he should state the fact in his protest, and, if he fails to do so, his objection is not stated distinctly and specifically, within the meaning of the statute. It follows that the ruling in the court below was correct, and that the judgment should be affirmed.

(78 Fed. 649.)

THE BOWDEN.

THE DECATUR H. MILLER.

THE BOWDEN v. THE DECATUR H. MILLER et al.

(Circuit Court of Appeals, Fourth Circuit. February 2, 1897.)

No. 188.

1. COLLISION—STEAMSHIPS IN HARBOR.

   A steamship which, on approaching another steamer lying or moving in a narrow harbor channel, fails to get any answer to her signals, should have her attention arrested thereby, and is bound to take every precaution to avoid risk of collision, even from the negligence of the other.

2. SAME.

   A steamship without steam up, which has been moved from her dock, and is lying in the channel of a narrow harbor, while her tug is preparing to tow her, is in fault if she fails to maintain a lookout for approaching vessels, so as to apprise them of her helpless condition.

Appeal from the District Court of the United States for the District of Maryland.

Robert H. Smith, for appellant.

William Pinkney Whyte (Daniel H. Hayne and Joseph Whyte on the brief), for appellees.

Before GOFF and SIMONTON, Circuit Judges, and BRAWLEY, District Judge.

SIMONTON, Circuit Judge. This is an appeal from the decree of the district court of the United States for the district of Maryland,

Digitized by Google

in admiralty. It is a case of collision growing out of these facts: The Decatur H. Miller is a steamship of the Merchants' & Miners' Transportation Company. She is 260 feet long, 38 feet beam. Her sides are 20 feet above the water line, and she has houses on deck adding to her height out of water. The docks of this line are in the inner harbor of the port of Baltimore, which at this point is from 900 feet to 1,000 feet wide. She was in her dock on the early morning of the 18th May, 1896, and had discharged all her cargo, with the exception of about 400 tons. Her owners desired to have her moved lower down the harbor, for the purpose of finishing discharge of cargo. To that end, as she had no steam in her boilers, the tug Venus was employed. This tug was owned by the steamship company, and was customarily employed for the purpose of moving its ships under these circumstances. The Miller was lying in her dock, with her starboard side to the wharf. The tug made a line fast to her port quarter, pulled her stern foremost into the stream, her head pointing up the harbor, and then pulled her around until her heading was reversed, pointing down the channel. She was then about 300 feet from the line of wharves. In the meantime the Bowden, a fruit steamer, was coming up the harbor of Baltimore, on the way to her own dock, not far above that at which the Miller had been lying. When she was opposite the quarantine station she had reduced her speed to about seven miles per hour, and as she got near and into the inner harbor she slowed down to about four miles an hour. She was in a bend of the river, and as she reached Shryock's Wharf, at the end of the bend, she ported her helm so as to pass along the front of the wharves. Just before, or perhaps just as, she reached this point, she nearly came into collision with a water boat; starboarding her helm to avoid the collision, and immediately porting it again. As she rounded Shryock's Wharf she came in sight of the Miller, lying as above stated. At that moment the tug Venus had cast off the line to the Miller, blowing a long blast of her whistle as she did so, and had backed, and gone in on the starboard quarter of the Miller. She was completely hidden from the Bowden, and was not seen by any one on that vessel. The Bowden, coming in sight of, and when about 1,200 feet away from, the Miller, blew one blast of her whistle, indicating that she would pass to port between her and the wharves. No response whatever came from the Miller or from the tug Venus, and it appears that this signal was not heard either on the tug or the steamer. Having no response, the Bowden kept on her way without slacking or stopping until she was within 300 feet of the Miller, when, observing that the Miller was gradually approaching her, the Bowden put her helm hard a-port, and reversed at full speed. Her momentum was not checked, nor her direction changed, and she struck the Miller on her port side at an angle of 45°, making an incision about 12 feet from top to bottom, and about 3 feet wide. The Miller was towed to her wharf, where she filled and sank about 20 minutes after the collision. At the time of the collision the Miller, without steam herself, and not yet fastened to the tug, had no headway on her. She must, however, have been in motion, sagging under the influence of the wi

Digitized by Google

a light breeze, on her starboard side, and perhaps under the momentum of the turn given to her by the tug in changing her heading from up to down the stream. There was no tide. Notwithstanding this, the Miller had not diminished the space between herself and the wharves less than 150 or 175 feet. The Bowden was 27 feet beam. She steered badly, and did not readily yield to her engines when reversed.

The court below, after hearing the witnesses, was of the opinion that there was sufficient space for the Bowden to pass between the Miller and the line of wharves, and that the disaster was due in great measure to the fact that the pilot on the Bowden had gone too near to the Miller without porting sufficiently, relying upon the Miller to get out of his way; that he thus lost his head, and, when he reversed his engines, found that the Bowden would not obey her helm. This finding of the fact by the court below has great weight with this court. The Lucy and The Spring Garden, 42 U. S. App. 100–104, 20 C. C. A. 660, and 74 Fed. 572. And a careful review of the testimony leads us to the same conclusion. It is clearly not a case of inevitable accident, which must be understood to mean a collision which occurs when both parties have endeavored by every means in their power, with due care and caution and a proper display of nautical skill, to prevent the occurrence of the accident, and when the proofs show that it occurred in spite of everything that nautical skill, care, and precaution could do to keep the vessels apart. The Maybey and Cooper, 14 Wall. 215; The Grace Girdler, 7 Wall. 196. In these narrow channel ways, the utmost care and precaution are required, not only to prevent collision, but to avoid the risk of collision. There is no room for theory. The rapid succession of facts must be closely observed, and must govern. The Bowden may have concluded that the Miller was under way. But when she gave her whistle and received no response, nor observed any movement on the part of the Miller, her attention should have been arrested, and it was her duty to have taken every precaution to avoid the result of negligence, even, on the part of the Miller. Instead of doing this, she pursued her course unchanged, notwithstanding her defect in steering, until it was too late either to change her direction, or to reverse and back in time to prevent the collision.

But was the Miller wholly without fault? She had the right to do as she did,—to be towed out into the stream. This, it seems, was the custom with all the steamers of her line. But absolutely helpless as she was when she reached the midchannel, in a narrow seaway, the entrance and exit of all vessels using the inner harbor, it behooved her to take and exercise every precaution possible. While elaborate rules have been adopted, intended to prevent the risk of collision, still so important is it that every possible precaution should be taken, that these same rules themselves provide that nothing contained in them shall exonerate any ship from the consequences of the neglect of any precaution which may be required by the ordinary practice of seamen, or by the special circumstances of the case. The Sunnyside, 91 U. S. 208. "The rul-

Digitized by Google

ing principle of the court is that an obligation rests on all vessels found in the avenues of commerce to employ active diligence to avoid collisions." New York, etc., Co. v. Calderwood, 19 How. 246; The Maria Martin, 12 Wall. 31. The Miller on this occasion had no one whatever on the lookout. Her acting master and her crew were all busily engaged in duties which occupied all their attention, precisely as if she were tied to a wharf. Not only was the blast of the approaching steamer not observed; it was not even heard by any one on her deck. True, she could not have responded either with one blast or two blasts, for that would have asserted that she was proceeding either with a port or a starboard helm, while in truth she could have done neither. But she could have blown the danger signals, indicating her own helpless condition. The Roslyn, 22 Fed. 687. Had there been a lookout, or had her acting master realized his duty, signals could have come from the tug, or the tug itself have been put in motion and the disaster averted; for, according to all the testimony, a slight change of direction would have prevented the collision. Certainly an early indication to the Bowden would have removed her mistake. It is manifest that the indifference and negligence of the crew of the Miller contributed to this accident. Great care is required of a large steamer, leaving her dock, to see that no damage is done to other vessels near her. The City of Paris, Fed. Cas. No. 2,767, 14 Blatchf. 531. The position of the Decatur H. Miller was closely, if not wholly, analogous to a sailing vessel in stays, and there is no doubt that it was the duty of other vessels to keep clear of her. But even in such case it is the duty of those on board to take a due look around beforehand to ascertain that no ship is in the neighborhood, likely to come on them. Mars. Mar. Coll. 447, and note. See, also, The John Fenwick, L. R. 3 Adm. & Ecc. 500. In The American Eagle, 27 Fed. 465,—a case closely resembling this in some, but not all, respects,—a steamer, the Eagle, collided with a tug engaged in making up her tow in East River, New York Harbor, and, while so doing, helpless to get out of the way of other vessels. In that case the court says:

"Being in full view of all approaching vessels, and at a sufficient distance to enable them to keep away from her by getting her tow in readiness to move, the pilot of the tug had no reason to suppose the Eagle would not go on one side or the other of him. When he saw the Eagle coming towards him, he hailed her to keep off. There was nothing he could do more, since he could not safely move forward or backward."

There was no such effort on the part of the Miller, no action or precaution whatever, and consequently she also was in fault. Under these circumstances, the damages should be apportioned. Let the case be remanded to the district court, with directions to take such order therein as will be in accordance with this opinion.

Digitized by Google

(78 Fed. 664.)

HAMLIN et al. v. TOLEDO, ST. L. & K. C. R. CO. et al.

(Circuit Court of Appeals, Sixth Circuit. February 2, 1897.)

No. 430.

1. APPEALABLE FINAL DECREES—DENIAL OF RIGHT TO INTERVENE.

Certain unsecured creditors of an insolvent railroad company filed a bill against it to wind up its affairs. A suit for foreclosure of a first mortgage on the road was afterwards brought, and was consolidated with the creditors' bill. Certain holders of preferred stock of the company then petitioned the court to be made defendants, and for leave to file an answer and cross bill. This application was granted, subject to the right of the complainants to move to strike out the answer and cross bill. Complainants did so move, and upon the motion an order was entered denying the petitioners the right to intervene, or to file an answer or other pleading. From this order an appeal was taken. *Held*, that while the allowance or denial of an application to intervene rests in the discretion of the court, and no appeal could have been taken from the original order letting the petitioners in, yet as their application to come in had been granted, and they were thereby made parties, the order subsequently made, which in effect determined that the answer and cross bill presented no defense and no ground for affirmative relief, and dismissed the parties from the cause, was appealable as a final decree.[1]

2. PARTIES TO RAILROAD FORECLOSURES—PREFERRED STOCKHOLDERS.

Certain holders of securities of an insolvent railroad company, upon the reorganization of the company and the organization of a new corporation, received preferred stock of such new corporation, the certificates of which recited that the holders were entitled to shares of the preferred, nonvoting capital stock of the company; that the stock constituted a lien on the property and net earnings of the company next after the first mortgage; that after January 1, 1888, the stock would carry interest at 4 per cent., payable only out of the net earnings of the company; that such interest should not accumulate, and coupons representing unearned interest must be surrendered on payment in whole or in part of a subsequent coupon; that after January 1, 1891, the certificates might be converted into common stock, and, if not so converted, would become converted 4 per cent. noncumulative stock; and that the company would create no lien on its road, other than the first mortgage, except subject to the lien of the certificates, without the consent of the holders of two-thirds of the preferred stock. *Held*, that the holders of such certificates were not creditors of the corporation, but were stockholders entitled to a preference over the holders of common stock, both as to dividends and capital, and as such, having an interest antagonistic to the common stockholders, they were proper parties to a suit for the winding up of the corporation and the distribution of its assets.

Appeal from the Circuit Court of the United States for the Western Division of the Northern District of Ohio.

The Toledo, St. Louis & Kansas City Railroad Company is an insolvent railroad corporation. In May, 1883, certain unsecured creditors filed a bill in the circuit court of the United States, at Cleveland, Ohio, for the purpose of winding it up and distributing all of its assets justly among its creditors. This first bill was a general insolvent bill, and was professedly filed for the benefit of all creditors, secured and unsecured. A number of other general creditors subsequently joined the original complainants, and were admitted as complainants. Under that bill a receiver was appointed by the circuit court, who took possession of the railroad within the state of Ohio, and engaged in the operation of the same, pending the sale which it was the object of the suit to bring about. Like bills, ancillary in character, were filed by the same complainants within other jurisdictions, and the same receiver was appointed within each jurisdiction. Neither the holders of bonds nor their trustees were made parties to that bill. Subsequently, however, the

[1] As to what are final appealable decrees and judgments, see note to Trust Co. v. Madden, 17 C. C. A. 238.

Digitized by Google

Continental Trust Company and John M. Butler, claiming to be trustees under a mortgage made by the said company to secure an issue of some $9,000,000 of first mortgage bonds, filed their original bill in the same circuit court for the purpose of foreclosing said mortgage. The creditors who had filed the original insolvent bill, and such others as had made themselves parties thereto, were made defendants. By leave of the court, Samuel R. Callaway, the receiver in possession of the railroad by appointment under the original creditors' bill, was also made a defendant. This bill was filed December 13, 1893. Thereupon the said Callaway was appointed receiver under this second bill, and an order made consolidating the two suits and ordering that they proceed under the style of "The Continental Trust Company et al. v. The Toledo, St. Louis & Kansas City Railroad Company et al." 72 Fed. 92. After answers had been filed by the company and by the general creditors who had been made parties, but before any decree adjudicating any claim or ordering foreclosure, the appellants presented an application to the court to be allowed to become parties defendant, with leave to file an answer and cross bill. This application was granted, and leave given to file the answer and cross bill accompanying the petition, subject, however, to the right of the complainants to move the court to strike them from the files, or to modify same by striking out every averment putting in issue the validity of, or consideration for, the mortgage bonds secured under the said mortgage. This reservation, as shown by an opinion filed with the record by the district judge, was due to the fact that the mortgagee complainants had not fully examined the said answer and cross bill, and desired time to do so. Complainants availed themselves of this leave thus granted, and subsequently gave notice that on the 26th of October, 1895, they would move the court to strike from the files the answer and cross bill theretofore filed, or move the court to modify said answer and cross bill by striking therefrom every averment raising an issue as to the validity of the mortgage bonds, or the consideration upon which they had been issued. The appellants were also notified that these motions would be supported by certain affidavits of persons whose names were set out therein. These motions, with the affidavits filed in their support, were taken under advisement until February 21, 1896, when an opinion was placed on the files denying the claim of appellants to be creditors of said railroad company, or that, as preferred stockholders, they had any lien valid as against creditors, or any right or interest in or to the property of said company antagonistic to the corporation or to the class of common stockholders. Instead, however, of directing the pleadings to be taken from the files or amended, an order was entered, as on motion of complainants' solicitors, denying appellants the right to intervene or file an answer or other pleading. This decree was not finally entered until May 14, 1896, and from it an appeal was prayed and allowed. At the June session of the last term of this court, a motion was made to dismiss this appeal, which, without an opinion, was overruled. The case is now before us for decision of the questions raised by the errors assigned by complainants upon the decree.

John H. Doyle and Benjamin Harrison, for appellants.

E. C. Henderson and C. N. Fairbanks, for appellees.

Before TAFT and LURTON, Circuit Judges, and SAGE, District Judge.

LURTON, Circuit Judge, after stating the facts as above, delivered the opinion of the court.

The allowance or denial of the application of a stranger to be admitted as a party defendant to a pending suit in equity rests in the sound discretion of the chancellor. The denial of such an application is not such a final decree as is the subject of appeal, under section 692 of the Revised Statutes. Such an application is a mere motion in the case, made by one not a party, and is not of itself an independent suit in equity, appealable here. Ex parte Cutting, 94 U. S. 14; Toler v. Railway Co., 67 Fed. 168; Lewis v. Railroad Co., 10 C. C. A. 446, 62 Fed. 218. It follows, therefore, that if no other order had been made in reference to the

Digitized by Google

application of appellants to become parties than that of May 14, 1896, no appeal would lie, and the motion to dismiss should have been sustained. But that is not the situation. The order of October 19, 1895, when properly construed, made the appellants parties defendant, with the right to answer and file a cross bill. The reservation of a right to require that the answer should present only pertinent and material defenses was an unnecessary precaution, inasmuch as it is always the duty of a chancellor, upon proper exception taken, or at the hearing, to see that nothing shall be suffered to remain in an answer which is not called for by the bill, nor material to the defense. Beach, Mod. Eq. Prac. § 408. Such a reservation did not suspend the application of the petitioners, nor leave their motion to become parties undecided. The reason given for this reservation in an opinion filed by the court August 5, 1895, was that the complainants had not had an opportunity of examining the answer. If the court had continued the motion until the pleadings had been examined, and then denied leave to intervene because the answer made out no substantial defense, the denial would not have been ground for an appeal. But this was not what was done. The motion to be allowed to become parties defendant was not held in suspense or continued, but was decided and granted. From the date of that order they were treated by appellees and by the court as parties, and were from that time affected by any decree made in the cause. The reservation of a right to determine, on motion of complainants, if they saw fit to make such motion, how far the answer and cross bill so filed contained matter pertinent to the character of the suit, did not operate as a suspension of the motion to be admitted as parties, or give the court any right to summarily dismiss them as parties. The notice given by complainants under the reservation referred to involved a recognition that appellants were parties, and was a concession in that regard. The questions to arise on that motion concerned the pertinency of the answer and cross bill, and it was error in the court to involve that question with a trial of issues of fact or law dependent upon ex parte affidavits. The questions arising upon these motions so set down upon formal notice for October 26, 1895, were not decided by the court until February 21, 1896. 72 Fed. 92. At that time an opinion was filed upon the merits of the claims asserted in the answer and cross bill, holding that appellants were neither secured nor unsecured creditors, and that, as preferred stockholders, they had no interest which was not represented by the corporation.

The decree then entered, when construed in connection with the decree admitting appellants as parties, should be interpreted as one denying appellants any relief, upon the ground that neither their intervening petition nor their answer and cross bill showed any such interest in the subject-matter of the case as entitled them to maintain their cross bill, or present any issues or set up any rights by answer. This is the construction we placed on the decree at the former term, and, thus construed, the decree was one upon the merits, and appealable as a final decree. If this view

Digitized by Google

of the rights and interests of these appellants had been taken before they were admitted as parties, and if, as a consequence of such opinion, the court had refused leave to intervene as parties defendant, no appeal would have been permissible. Appellants could have asserted their rights through an original bill, and would not have been concluded by the refusal of the court to allow the assertion of such rights in a cause to which they were not parties. But if, as in this case, the court concludes, upon inspection of an answer or a cross bill filed by one already a party to the cause, that the pleadings are impertinent and show no substantial defense, or no interest which would justify affirmative relief, and for this cause dismisses the pleading and the party from the cause, the action of the court is subject to review. The distinction is material, and is the point upon which we denied the motion to dismiss this appeal. The general rule as to an answer is that nothing should be suffered to remain in it which is neither called for by the bill nor material to the defense. Beach, Mod. Eq. Prac. § 408; Woods v. Morrell, 1 Johns. Ch. 105; Stafford v. Brown, 4 Paige, 88. In Stafford v. Brown, cited above, Chancellor Walworth said that:

"When new matter not responsive to the bill was stated in the answer, if such matter was wholly irrelevant and furnished no sufficient ground of defense, the complainant might except to the answer for impertinence, or might raise the question on the hearing." "Facts not material to the decision are impertinent, and, if reproachful, they are scandalous."

In Woods v. Morrell, supra, Chancellor Kent said that the best rule to ascertain whether matter be impertinent is to see "whether the subject of the allegation could be put in issue or be given in evidence between the parties." He adds:

"The court will always feel disposed to give the answer a liberal consideration on this point of matter irrelevant, and to consider whether it can have any real or proper influence upon the suit."

If the answer and cross bill show in fact that appellants presented no ground for being suffered to appear and defend this consolidated suit, and no interest in the subject-matter of the suit which could not be properly represented by the corporation, then no wrong was done in dismissing them from the case. If, on the other hand, they are creditors of the corporation, secured or unsecured, or have any such peculiar interest as cannot be properly represented by the trustee under the mortgage, or by the corporation which is a defendant, then the case should be remanded and regularly heard. It is not clear that the court permitted the affidavits filed by complainants in opposition to the merits presented by the appellants to influence its action. They were improperly filed, and will not be regarded upon this appeal. Appellants' case must stand or fall upon the averments made by their petition, answer, and cross bill, and upon such exhibits as were filed by them. The case made by the petition, answer, and cross bill was substantially this: They and those acting in concert with them are owners and holders of certificates of preferred, nonvoting stock issued by the Toledo, St. Louis & Kansas City Railroad Company. The total issue of these certificates

Digitized by Google

was $5,805,000, and, of this total, appellants and those represented by them hold about $2,000,000. They claim that these certificates are money obligations of the railroad company, secured by a lien next after the existing first mortgage bonds of said company. They aver that, though no mortgage was executed and registered to secure said certificates, they constitute a valid equitable mortgage, binding upon the corporation, and upon all creditors who become such with notice of this equitable lien. These certificates are in form alike, and were issued simultaneously with the execution of the first mortgage sought to be foreclosed herein, and were registered by the trustee under said first mortgage. We here set out one of these certificates, and one of the coupons attached:

Toledo, St. Louis & Kansas City Railroad Company.

No. ——. Preferred Capital Stock. 10 Shares.

This is to certify that James M. Quigley or bearer is entitled to ten shares, of one hundred dollars each, of the preferred, nonvoting capital stock of the Toledo, St. Louis & Kansas City Railroad Company. This stock constitutes a lien upon the property and net earnings of the company next after the company's existing first mortgage. It does not entitle the holder to vote thereon. After the first day of January, 1888, it is entitled to and carries interest at the rate of four per cent. per annum, payable semiannually, represented by interest coupons attached to this certificate. Such interest is only payable out of the net earnings of the company after the payment of interest upon its existing first mortgage bonds, and the cost of maintenance and operation. A statement showing the business of the company for the half of its fiscal year next preceding shall be exhibited at the office of the company in New York to the holder of this certificate, at the maturity of each interest coupon, and the net earnings applicable to such interest shall be reckoned for such period. Such interest is not to accumulate as a charge, and coupons representing unearned interest must be surrendered and canceled on the payment in whole or in part of a subsequently maturing coupon. At any time after the first day of January, 1891, and before the first day of January, 1898, this certificate may be converted into the common capital stock of the company. If not converted, then to become a converted four per cent. noncumulative stock. The company will create no mortgage of its main line, other than its first mortgage, nor of any part thereof, except expressly subject to the prior lien of this certificate, without the consent of the holders of at least two-thirds of this stock, present at a meeting of which reasonable personal notice must be given to each registered stockholder, and by publication for at least three successive weeks in two leading daily newspapers published in the cities of New York and Boston. One-third of the entire issue of this stock, present in person or by proxy, shall constitute a quorum. Nor will the company increase the issue of these certificates of stock without consent obtained as above. This certificate of stock shall be transferred by delivery, or by transfer on the book of the company in the city of New York, after a registration of ownership certified hereon by the transfer agent of the company.

[Countersigned]
American Loan & Trust Company,
By ——,
Secretary.

New York, June 19, 1886.
——,
President.
——,
Secretary.

Shares $100 Each.

(Coupon.)

The Toledo, St. Louis & Kansas City Railroad Company.

Will pay to bearer on the first day of January, 1898, upon the surrender of this warrant at its office or agency in the city of New York, any amount that may be due hereon under the conditions set forth in the certificate of stock to which this is attached, not exceeding the sum of twenty dollars. Coupon No. 20. No. ——.

Isaac White, Secretary.

Digitized by Google

Appellants do not strengthen their claim by the lengthy statement of the terms of the reorganization scheme under which their certificates were issued, and to which they were parties. They were originally holders of first mortgage bonds in a corporation which was the predecessor of the present company in the title. They foreclosed, and caused the property to be bid in by Sylvester H. Kneeland, as trustee, for their use. This was done in pursuance of a reorganization plan by which the property foreclosed was to be conveyed to a new corporation. This new corporation was to issue common stock and first mortgage bonds, both of which were to be expended under a contract with Kneeland in the conversion of the old narrow-gauge railroad into a standard-gauge line, and in its extension, and in the purchase of new rolling stock. They say that, during the negotiations between the committee which represented the senior foreclosing bondholders, it was at one time determined that second mortgage bonds should be issued ratably to the said foreclosing bondholders, but that it was finally deemed unadvisable to take that course, and it was therefore agreed that "preferred, nonvoting stock" should be issued to said original holders of bonds of the old corporation; "said preferred stock to be a second lien on all the property of said corporations, subject only to lien of said first mortgage bonds." The certificates exhibited are in precise accordance with the reorganization agreement as stated in the pleading. Whatever their former relation to the property now owned by the defendant railroad company, their present rights must depend upon the interpretation and legal effect of the language contained in the certificates issued in lieu of their bonds. They have received precisely what they bargained for. That they are holders, by virtue of these certificates, of certain interests in the capital stock of this corporation, is to our minds very clear. That is the plain declaration contained on the very face of the certificates themselves. The language is, "that the bearer is entitled to ——— shares of the preferred, nonvoting capital stock," etc. That these shares are declared to carry "interest at the rate of four per cent. per annum, payable semiannually, represented by coupons attached," is not conclusive that they are debt obligations. By calling a dividend "interest," the essential nature of the thing is not changed. We must look deeper. When we do so, we find that this "interest" is to be paid only out of "the net earnings" after paying interest upon the first mortgage bonds, "and the cost of maintenance and operation." We further find that this so-called "interest" is "noncumulative." The net earnings of each year are to be ascertained. If there are none, after paying interest on the first mortgage bonds and operating expenses and expenses of maintenance, no "interest" is to be paid; and when, at any time, such a happy state of affairs is found to exist as a surplus, so that anything can be paid upon the current year's "interest," all past-due coupons for "unearned interest" are to be surrendered. Thus, this "interest" has all the characteristics of a preference, in dividends to the extent of four per cent. per annum, over the common stock, and none of the marks of interest proper. The agreement

Digitized by Google

that "the company will create no mortgage * * * other than its first mortgage, * * * except subject to the prior lien of this certificate, without the consent of the holders of at least two-thirds of this stock," etc., is entirely consistent with an intent to give to these preferred stockholders a preference over the common stockholders, not only in relation to dividends, but a preference over them in the ultimate distribution of the capital stock. The clear purpose of the provision making this stock a lien second only to the existing first mortgage is to secure to it a preference over the common stock, not only in respect to a limited dividend, but in the ultimate return of capital to those who contributed to it. In the absence of charter regulation or prohibition by the law of the state under which a corporation is organized, a corporation, at its organization, may classify its stock, and provide for a preference of one class over another in respect of both capital and dividends. Cook, Stock, Stockh. & Corp. Law (3d Ed.) §§ 266–278; Warren v. King, 108 U. S. 389, 2 Sup. Ct. 789; Lockhart v. Van Alstyne, 31 Mich. 76; Kent v. Mining Co., 78 N. Y. 159; McGregor v. Insurance Co., 33 N. J. Eq. 181; Miller v. Ratterman, 47 Ohio St. 163, 24 N. E. 496. In providing for the lien of this stock upon the "property" of the company next after the company's existing first mortgage, "property and net earnings" are coupled together. This is significant. The lien given upon "net earnings," is the same kind of lien given on the "property" of the company. In such case it is a preference over the usual rights and interests of another, but subordinate, class of stockholders. Neither do we think that the provision that this stock shall "become preferred four per cent. noncumulative stock," in the event the holder fails to avail himself of the privilege of converting it into common stock within the time allowed, is indicative that it was not preferred stock before the rejection of the option to become common stock. Before that it was a nonvoting, noncumulative, preferred stock, with the option to become common stock. After that time this option is lost, and with it the privilege of sharing equally with the other class of stock in the control of the corporation and in the distribution of dividends, without the limitation prescribed as to the amount of such dividend. That seems to be the only result of rejecting the option. There is a wide difference between the relation of a creditor and a stockholder to the corporate property. One cannot well be a creditor as respects creditors proper, and a stockholder by virtue of a certificate evidencing his contribution to the capital of the corporation. Stock is capital, and a stock certificate but evidences that the holder has ventured his means as a part of the capital. It is a fixed characteristic of capital stock that no part of it can be withdrawn for the purpose of reimbursing the principal of the capital stock until the debts of the corporation are paid. These principles are elementary. Warren v. King, 108 U. S. 389, 2 Sup. Ct. 789; Cook, Stock, Stockh. & Corp. Law (3d Ed.) § 271. The chance of gain throws on the stockholder, as respects creditors, the entire risk of the loss of his contribution to capital. "He can-

Digitized by Google

not be both a creditor and debtor by virtue of his ownership of stock." Warren v. King, supra. If the purpose in providing for these peculiar shares was to arrange matters so that, under any circumstances, a part of the principal of the stock might be withdrawn before the full discharge of all corporate debts, the device would be contrary to the nature of capital stock, opposed to public policy, and void as to creditors affected thereby. Cook, Stock, Stockh. & Corp. Law (2d Ed.) §§ 270, 271; Chaffee v. Railroad Co., 55 Vt. 110; McCutcheon v. Capsule Co., 19 C. C. A. 108–115, 71 Fed. 787; Morrow v. Steel Co., 87 Tenn. 262, 10 S. W. 495. If that was the purpose of this arrangement, most doubtful language was employed. There is a sense in which every shareholder is a creditor of the corporation to the extent of his contribution to the capital stock. In that sense every corporation includes its capital stock among its liabilities. But that creditor relation is one which exists only between the corporation and its shareholders. It is a liability which is postponed to every other liability, and no part of the capital stock can be lawfully returned to the stockholders until all debts are paid or provided for. The violation of this well-understood principle is a breach of trust, and a creditor affected thereby may pursue the stockholders, and recover as for an unlawful diversion of assets.

Appellants say that it was originally contemplated that the new corporation should pay them for their interests in the foreclosed railroad, and, for that purpose, should issue to them its second mortgage bonds. If that plan had been carried out, there would be no doubt as to their attitude. They would have become creditors. Under it their relation would have been one of no doubt, and notice by registration would have put all who dealt with the corporation on guard. That plan was abandoned. They agreed to take, and did take, the relation of stockholders towards the new company. They surrendered the privilege of voting. That was perhaps a valid agreement between stockholders, though of doubtful public policy. They thereby gave some additional value to the common stock. The latter was the exclusive voting stock, and that was worth something, as railway management now goes. The surrender of the right to vote does not make them creditors. They bargained for preferred shares of stock,—preferred as to dividends and preferred as to capital. For this advantageous position they surrendered the first intention, by which they were to have become secured creditors. If they intended to become creditors, and not stockholders, they adopted a most singular method of defining their relation. We will not presume that their purpose was to adopt a device by which they might withdraw their contribution to the capital stock and leave creditors unpaid. If they intended that, they have not made it plain, and, if it was plain, the device would be invalid as to creditors.

Although appellants were not creditors proper, yet they show a case, on the face of their certificates, entitling them to a preference over common stockholders in relation to both dividends and capital. Ordinarily preferred stock is entitled to no preference

Digitized by Google

over other stock, in relation to capital. But where there is an expressed agreement giving such a preference, not prohibited by local law nor the charter, we see no reason why it is not a valid contract, as between the corporation and such preferred stockholders, and binding upon the common stockholders. Cook, Stock, Stockh. & Corp. Law, § 278; Warren v. King, 108 U. S. 389, 2 Sup. Ct. 789; Chaffee v. Railroad Co., 55 Vt. 110; In re Bangor & P. S. & S. Co., L. R. 20 Eq. 59; Lockhart v. Van Alstyne, 31 Mich. 79; Kent v. Mining Co., 78 N. Y. 159. Such a preference would not be inconsistent with their relation as stockholders and would not affect creditors. This relation to the corporation and to its common stockholders, in view of the nonvoting provision in this arrangement, makes it eminently proper that these preferred stockholders should be represented by a reasonable number standing for the class, with the right to stand for and defend in respect to their own rights. Bronson v. Railroad Co., 2 Wall. 283–302.

If it be true, as alleged, that the officers and directors of this corporation hold their places through the grace and at the will of those who hold both the common stock and the first mortgage bonds, it furnishes a fair reason for suffering these stockholders to be represented in the defense. We have not considered the questions made by counsel which are based upon the ex parte affidavits touching the actual reorganization agreement. We have undertaken to dispose of this case upon the facts stated in the answer. Neither shall we undertake to decide how far the defenses suggested in the answer and cross bill, against the first mortgage bonds, are available to these stockholders, or to what extent the action of the corporation or the trustees, or committees acting for the preferred stockholders, has concluded them. These are all questions proper to be decided upon a demurrer to the cross bill, or upon final hearing. What we decide is that, although appellants are not creditors, they are entitled, on the averments of their answer, to a preference, in relation to the capital of this corporation, over common stockholders, and that, upon the averments of their answer, they were at least proper parties defendant, having a substantial interest antagonistic to the common stockholders, and therefore not to be properly represented by the corporation. It is a case in principle like that of a common trustee in conflicting mortgages. Such a trustee cannot represent antagonistic rights of contending classes of lienors. When that is the case, each class should be allowed representation. Farmers' Loan & Trust Co. v. Northern Pac. R. Co., 66 Fed. 169–176; Toler v. Railroad Co., 67 Fed. 168–174. The effect of dismissing appellants from the case after admitting them as parties was to deny them the preference over common stockholders, and was such a decree as was final, and therefore appealable. Ex parte Jordan, 94 U. S. 248. For this error the decree will be reversed, and cause remanded to be heard in regular course. Costs of appeal will be paid by appellees.

Digitized by Google

(78 Fed. 693.)

PEIRCE v. VAN DUSEN.

(Circuit Court of Appeals, Sixth Circuit. February 2, 1897.)

No. 375.

1. RAILROAD RECEIVERS—INJURIES TO EMPLOYES—CONSTRUCTION OF STATUTE.
The Ohio act of April 2, 1890, for the protection and relief of railroad employés (Laws Ohio 1890, p. 149), providing that railroad or railway corporations or companies shall not make certain contracts for exemption from liability to their employés, shall not use defective cars, etc., and that in actions against such companies for personal injuries to employés the rule as to fellow servants is to a certain extent abrogated, applies to suits brought against a receiver of a railroad corporation operating its road.

2. SAME—STATE STATUTES—FEDERAL COURTS.
Said statute is not applicable alone to railroad corporations of Ohio, engaged in the domestic commerce of the state, but to all railroad corporations doing business in Ohio. It does not encroach upon federal authority, nor upon the jurisdiction and powers of the federal courts, and is binding upon those courts, and upon receivers appointed by them.

3. SAME—CONSTITUTIONALITY OF STATUTE—UNIFORM OPERATION.
The third section of said statute, altering the rule as to the liability of an employer for the negligence of fellow servants, as it applies to all railroad corporations operating railroads in the state, and to all of a given class of railroad employés, is not repugnant to the provision of the constitution of Ohio that all laws of a general nature shall have uniform operation throughout the state. Shaver v. Pennsylvania Co., 71 Fed. 931, distinguished.

4. SAME—NEGLIGENCE OF FELLOW SERVANTS.
The negligence of a fellow servant for which the employer is made liable by said statute is not merely negligence in the performance of a duty imposed on the master personally, but negligence in the performance of work pertaining to the negligent employé and others in the same work.

5. SAME—EVIDENCE—RES GESTÆ.
Where a railroad employé has been injured by the movement of cars about which he was at work, statements of the conductor of the train, made almost immediately, and while the cars were moving or had just stopped, and while the injured man was bleeding from the injury at that moment received, describing his own part in bringing about the motion that effected the injury, are admissible, on the trial of an action for such injury, as part of the res gestæ.

In Error to the Circuit Court of the United States for the Western Division of the Northern District of Ohio.

Clarence Brown, for plaintiff in error.

Orville S. Brumback and Charles A. Thatcher, for defendant in error.

Before HARLAN, Circuit Justice, and TAFT and LURTON, Circuit Judges.

HARLAN, Circuit Justice. This action was brought by Edward Van Dusen against R. B. F. Peirce, as the receiver of the Toledo, St. Louis & Kansas City Railroad Company, a corporation organized under the laws of this state.

The order appointing Peirce as receiver was made by the court below in the case of Continental Trust Co. of New York v. Toledo, St. L. & K. C. R. Co., 72 Fed. 92. It directed the receiver to operate

Digitized by Google

the railroad, and do all things necessary to carry on the business of the company. He was so engaged on the 26th day of February, 1895, when the plaintiff, a yard brakeman, in the employ of the receiver, was so seriously and permanently injured while in the discharge of his duties—being himself without fault—that he lost entirely the use of his right hand. These injuries, it is alleged, were caused solely through the carelessness and negligence of one Bartley, a conductor employed by the receiver, and under whose control and direction the plaintiff was placed at the time of his being injured.

The defendant denied the allegations imputing negligence to him, and denied that the plaintiff was without fault.

A verdict was returned in favor of the plaintiff for $5,500 in damages. A motion for a new trial having been made and overruled, judgment was entered upon the verdict.

The principal question before us is whether the statute of Ohio passed April 2, 1890 (Laws Ohio 1890, p. 149), entitled "An act for the protection and relief of railroad employés; forbidding certain rules, regulations, contracts and agreements, and declaring them unlawful; declaring it unlawful to use cars or locomotives which are defective, or defective machinery or attachments thereto belonging, and declaring such corporation liable, in certain cases, for injuries received by its servants and employés on account of the carelessness or negligence of a fellow-servant or employé,"—is applicable to cases against the receiver of a railroad corporation, especially one acting under the orders of a federal court.

The first section of the act provides that:

"It shall be unlawful for any railroad or railway corporation or company owning and operating, or operating, or that may hereafter own or operate a railroad in whole or in part in this state, to adopt or promulgate any rule or regulation for the government of its servants or employés, or make or enter into any contract or agreement with any person in or about to engage in its service, in which, or by the terms of which, such employé in any manner, directly or indirectly, promises or agrees to hold such corporation or company harmless, on account of any injury he may receive by reason of any accident to, breakage, defect or insufficiency in the cars or machinery and attachments thereto belonging, upon any cars so owned and operated, or being run and operated by such corporation or company, being defective, and any such rule, regulation, contract or agreement shall be of no effect. It shall be unlawful for any corporation to compel or require directly or indirectly an employé to join any company association whatsoever, or to withhold any part of an employé's wages or his salary for the payment of dues or assessments in any society or organization whatsoever, or demand or require either as a condition precedent to securing employment or being employed, and said railroad or railway company shall not discharge any employé because he refuses or neglects to become a member of any society or organization. And if any employé is discharged he may, at any time within ten days after receiving a notice of his discharge, demand the reason of said discharge, and said railway or railroad company shall thereupon furnish said reason to said discharged employé in writing. And no railroad company, insurance society or association, or other person shall demand, accept, require or enter into any contract, agreement or stipulation with any person about to enter, or in the employ of any railroad company whereby such person stipulates or agrees to surrender or waive any right to damages against any railroad company, thereafter arising for personal injury or death, or whereby he agrees to surrender or waive in case he asserts the same, any other right whatsoever, and all such stipulation and agreements shall be void, and every corporation, association or person violating or aiding or abetting in the violation of this section shall for each offense forfeit and pay to the person wronged or deprived of his rights hereunder the sum of not less than

Digitized by Google

fifty dollars ($50) nor more than five hundred dollars ($500) to be recovered in a civil action."

By the second section it is made—

"Unlawful for any such corporation to knowingly or negligently use or operate any car or locomotive that is defective, or any car or locomotive upon which the machinery or attachments thereto belonging are in any manner defective. If the employé of any such corporation shall receive any injury by reason of any defect in any car or locomotive, or in the machinery or attachments thereto belonging, owned and operated, or being run and operated by such corporation, such corporation shall be deemed to have had knowledge of such defect before and at the time such injury is so sustained, and when the fact of such defect shall be made to appear at the trial of any action in the courts of this state, brought by such employé, or his legal representatives, against any railroad corporation for damages, on account of such injuries so received, the same shall be prima facie evidence of negligence on the part of such corporation."

The third section, which is the one whose scope and meaning is involved in this action, provides that:

"In all actions against the railroad company for personal injury to, or death resulting from personal injury of, any person, while in the employ of such company, arising from the negligence of such company or any of its officers or employés, it shall be held in addition to the liability now existing by law, that every person in the employ of such company, actually having power or authority to direct or control any other employé of such company, is not the fellow-servant, but superior of such other employé, also that every person in the employ of such company having charge or control of employés in any separate branch or department, shall be held to be the superior and not fellow-servant of employés in any other branch or department who have no power to direct or control in the branch or department in which they are employed."

At the trial below it was contended on behalf of the plaintiff that the conductor and switchmen or yard brakemen, even when engaged together, at the same time and place, in operating the same train of cars, were not to be deemed fellow servants within the rule exempting an employer from liability to one servant for an injury caused by the negligence of a fellow servant. The circuit court, held by Judge Hammond, without determining this question as one of general law, decided that the case was governed by the third section of the above act of April 2, 1890, and, consequently, that Bartley, the conductor, having power to direct and control the work in which Van Dusen was engaged, was the superior, not the fellow servant, of Van Dusen, and was, therefore, the representative of the receiver.

The contention of the receiver is that that act by its terms applies only to corporations owning or operating railroads in whole or in part in Ohio by their own officers, and that it cannot properly be construed as applying to receivers operating railroads under the orders of a court of chancery. There are adjudged cases arising under statutes similar to the Ohio statute which seem to sustain this contention of the receiver. Henderson v. Walker, 55 Ga. 481; Campbell v. Cook, 86 Tex. 630, 634, 26 S. W. 486.

If the reasoning of the Georgia and Texas courts be applied to the Ohio statute, it cannot be held to embrace employés acting under the receiver of a railroad corporation. But, in our judgment, the statute is applicable to actions against receivers of railroad corporations. To hold otherwise would be to subordinate the reason of the law altogether to its letter. While the intention of the legislature must be ascertained from the words used to express it, the manifest reason and

Digitized by Google

the obvious purpose of the law should not be sacrificed to a literal interpretation of such words. If the Ohio statute is construed as applicable only to actions for personal injuries brought directly against railroad corporations, the result would be that in an action brought in one of the courts of Ohio the employés of a railroad corporation would be accorded rights that would be denied in another action of like kind, perhaps in the same court, to employés of the receiver of a railroad corporation under exactly similar circumstances. Could such a result have been contemplated by the legislature of Ohio? We think not. The avowed object of the statute was the protection and relief of railroad employés. To that end it declared that in the actions mentioned in it every person employed by the railroad company, and invested with power or authority to direct or control other employés, should be deemed the superior, not the fellow servant, of those under his direction and control. The legal effect, as well as the object, of this declaration was, in the cases specified, to make the negligence of the superior the negligence of the company. No violence is done to the ordinary meaning of the words of the statute if it be held that the legislature had in mind actions against receivers of railroad corporations as well as actions directly against such corporations. The appointment of a receiver of a railroad does not change the title to the property nor work a dissolution of the corporation. Although the creature of the court, and acting under its orders, the receiver, for most purposes, stands in the place of the corporation, exercising its general powers, asserting its rights, controlling its property, carrying out the objects for which it was created, discharging the public duties resting upon it, and representing the interests as well of those who own the railroad as of those who have claims against the corporation or its property. The corporation remains in existence notwithstanding a provisional receivership established by an order of court; and for the purpose of effectuating the will of the state, as manifested by the act of 1890, an action against the receiver arising out of his management of the property may be regarded as one against the corporation "in the hands of" or "in the possession of" the receiver. McNulta v. Lochridge, 141 U. S. 327, 331, 12 Sup. Ct. 11.

In Central Trust Co. v. Wabash, St. L. & P. Ry. Co. (1886) 26 Fed. 12, it was held that the statute of Missouri giving double damages against "every railroad corporation" which did not erect and maintain fences, openings, gates, farm crossings, and cattle guards on the line of its road (the validity of which act was sustained in Railway Co. v. Humes, 115 U. S. 512, 6 Sup. Ct. 110), was held applicable to a railroad in the hands of a receiver. To the same effect was Hornsby v. Eddy, 5 C. C. A. 560, 572, 56 Fed. 461, where the question was as to the applicability to federal receivers of a railroad of a statute of Kansas providing that "every railroad company" organized or doing business in that state "shall be liable for all damages done to any employé of such company, in consequence of any negligence of its agents, or by any mismanagement of its engineers or other employés, to any person sustaining such damage." In that case, the circuit court of appeals for the Eighth circuit well said:

Digitized by Google

"It is clear that, with respect to persons employed by a railway company as railway operatives, the statute last above quoted changes the rule of the common law that the master is not liable to a servant for an injury sustained in consequence of the negligence of a fellow servant. Does the fact that a receiver is appointed to temporarily operate a railroad forthwith alter the status of all of its employés, and re-establish as to them the old rule of the common law, so long as the receiver remains in charge? Viewing the question in the light of those considerations of public policy which probably gave birth to the statute, we cannot conceive of any reason why the appointment of a receiver should have such effect. It is a fact of which we may well take judicial notice that great railway systems, which employ thousands of men, are frequently operated for a term of years through the agency of a receiver. Such receivers do not, as a general rule, change the working force of the road, or the rules and regulations by which trains are run, or by which the other business of the road is transacted. The men whom they employ are engaged in the same quasi public service as other railway employés, and daily encounter the same risks and hazards. Furthermore, the receiver of a railroad operates it for the immediate benefit of the company by which it is owned, in that he discharges all of the public duties of the corporation, and appropriates the income of its road to the preservation of its property and franchises, and to the payment of its debts."

So much as to the scope and true meaning of the Ohio statute, without reference to the courts in which it may be enforced. If the statute means what we hold it to mean, must not full effect be given to it in actions for personal injuries brought against a receiver in a court of the United States? This question must be answered in the affirmative. Such legislation is not liable to the objection that it encroaches upon federal authority, or upon the jurisdiction or power of the United States court. The statute does nothing more than to prescribe a rule of action to be observed by all within the state. The authority to enact it is derived from the general power of the state to regulate the exercise of the relative rights and duties, and to provide for the safety, of all persons within its territorial jurisdiction. It is the duty of the federal court sitting in this state to enforce all enactments having such objects in view, unless they encroach upon the powers and authority of the United States. That duty arises out of the statute declaring that "the laws of the several states, except where the constitution, treaties or statutes of the United States otherwise require or provide, shall be regarded as rules of decision in trials at common law in the courts of the United States, in cases where they apply." Rev. St. § 721; Baltimore & O. R. Co. v. Camp, 31 U. S. App. 213, 13 C. C. A. 233, and 65 Fed. 952. Indeed, if congress had not so declared, this court, upon principles of comity, and in support of the public policy of the state, might well recognize and enforce, in actions brought against receivers of railroads, any rule established by the state for like actions brought against railroad companies.

The Ohio statute is not applicable alone to railroad corporations of Ohio engaged in the domestic commerce of this state. It is equally applicable to railroad corporations doing business in Ohio, and engaged in commerce among the states, although the statute, in its operation, may affect in some degree a subject over which congress can exert full power. The states may do many things affecting commerce with foreign nations and among the several states until congress covers the subject by national legislation.

Digitized by Google

This principle is illustrated in many cases; as in Cooley v. Board, 12 How. 299, 320, where the pilot laws of Pennsylvania were sustained, and were held to have been enacted in virtue of the power residing in the state to legislate, congress not having abrogated them nor established regulations inconsistent with them; as in Sherlock v. Alling, 93 U. S. 99, 104, where the court held that a statute of Indiana, giving a right of action to the personal representatives of a deceased when his death was caused by the wrongful act or omission of another, was applicable to the case of death resulting from collisions between vessels engaged in interstate commerce, and in which case it was said, generally, "that the legislation of a state, not directed against commerce or any of its regulations, but relating to the rights, duties, and liabilities of citizens, and only indirectly and remotely affecting the operations of commerce, is of obligatory force upon citizens within its territorial jurisdiction, whether on land or water, or engaged in commerce, foreign or interstate, or in any other pursuit"; as in Morgan's Louisiana & T. R. & S. S. Co. v. Louisiana Board of Health, 118 U. S. 455, 463, 6 Sup. Ct. 1114, where a quarantine statute of Louisiana, directly affecting commerce among the states and with foreign nations, was held not to be void as a regulation of commerce, but was valid under the power of the state to protect the public health, and was to be respected until the system of quarantine established by it was abrogated or displaced by congress; as in Smith v. Alabama, 124 U. S. 465, 8 Sup. Ct. 564, where a statute of Alabama was upheld that required all locomotive engineers in that state, whether they served on trains engaged in domestic commerce or only on trains engaged in interstate commerce, to be examined and licensed by a state board before acting as engineers within that state; and as in Nashville, C. & St. L. Ry. Co. v. Alabama, 128 U. S. 96, 100, 9 Sup. Ct. 28, in which the court held to be constitutional a state enactment requiring all locomotive engineers to be examined by a state board for color blindness, and in which case it was said that "wherever there is any business in which, either from the products created or the instrumentalities used, there is danger to life and property, it is not only within the power of the states, but it is among their plain duties, to make provision against accidents likely to follow in such business, so that the dangers attending it may be guarded against so far as is practicable," and which local enactments were to be deemed valid until congress took action on the subject. In Telegraph Co. v. James, 162 U. S. 650, 662, 16 Sup. Ct. 934, the supreme court of the United States held a statute of Georgia requiring every telegraph company with a line of wires wholly or partly within that state to receive dispatches, and, on payment of the usual charges, to transmit and deliver them with due diligence, under a named penalty, to be a valid exercise of the police power of the state in relation to interstate messages. The court said:

"While it is vitally important that commerce between the states should be unembarrassed by vexatious state regulations regarding it, yet, on the other hand, there are many occasions where the police power of the state can be properly

Digitized by Google

exercised to insure a faithful and prompt performance of duty within the limits of the state upon the part of those who are engaged in interstate commerce. We think the statute in question is one of that class, and, in the absence of any legislation by congress, the statute is a valid exercise of the power of the state over the subject."

In Hennington v. State of Georgia, 163 U. S. 299, 317, 16 Sup. Ct. 1086, in which a statute of Georgia forbidding the running of freight trains in that state on the Sabbath day was assailed as unconstitutional when applied to interstate commerce, the supreme court of the United States, upon a review of the adjudged cases, held it to be clear that:

"The legislative enactments of the states, passed under their admitted police powers, and having a real relation to the domestic peace, order, health, and safety of their people, but which, by their necessary operation, affect to some extent, or for a limited time, the conduct of commerce among the states, are yet not invalid by force alone of the grant of power to congress to regulate such commerce; and, if not obnoxious to some other constitutional provision, or destructive of some right secured by the fundamental law, are to be respected in the courts of the Union until they are superseded and displaced by some act of congress passed in execution of the powers granted to it by the constitution."

Undoubtedly, the whole subject of the liability of interstate railroad companies for the negligence of those in their service may be covered by national legislation enacted by congress under its power to regulate commerce among the states. But, as congress has not dealt with that subject, it was competent for Ohio to declare that an employé of any railroad corporation doing business here, including those engaged in commerce among the states, shall be deemed, in respect to his acts within this state, the superior, not the fellow servant, of other employés placed under his control. If the effect of the Ohio statute be, as undoubtedly it is, to impose upon such corporations, in particular circumstances, a liability for injuries received by some of its employés which would not otherwise rest upon them according to the principles of general law, that fact does not release the federal court from its obligation to enforce the enactments of the state. Of the validity of such state legislation we entertain no doubt. In Railway Co. v. Mackey, 127 U. S. 205, 208, 210, 8 Sup. Ct. 1161, the supreme court had occasion to consider several objections to a law of Kansas making railroad companies liable for injuries suffered by employés through the negligence of their fellow servants. Replying to the objection that such legislation denied the equal protection of the laws to railroad companies, in that it did not apply alike to all corporations, the court said:

"But the hazardous character of the business of operating a railway would seem to call for special legislation with respect to railroad corporations, having for its object the protection of their employés as well as the safety of the public. The business of other corporations is not subject to similar dangers to their employés, and no objections, therefore, can be made to the legislation on the ground of its making an unjust discrimination."

There is another view of this matter, equally conclusive. By Act Cong. March 3, 1887, c. 373 (24 Stat. 554), corrected by Act Aug. 13, 1888, c. 866 (25 Stat. 433), it is provided:

"Sec. 2. That whenever in any cause pending in any court of the United States there shall be a receiver or manager in possession of any property, such

Digitized by Google

receiver or manager shall manage and operate such property according to the requirements of the valid laws of the state in which such property shall be situated in the same manner the owner or possessor thereof would be bound to do if in possession thereof. Any receiver or manager who shall wilfully violate the provisions of this section shall be deemed guilty of a misdemeanor, and shall on conviction thereof be punished by a fine not exceeding three thousand dollars, or by imprisonment not exceeding one year, or by both said punishments, in the discretion of the court.

"Sec. 3. That every receiver or manager of any property appointed by any court of the United States may be sued in respect of any act or transaction of his in carrying on the business connected with such property, without the previous leave of the court in which such receiver or manager was appointed; but such suit shall be subject to the general equity jurisdiction of the court in which such receiver or manager was appointed, so far as the same shall be necessary to the ends of justice."

It would seem to be clear that, under this act of congress, if a railroad in the possession of a federal receiver is to be managed and operated according to the requirements of the laws of the state in which the property is situated, "in the same manner that the owner or possessor thereof would be bound to do if in possession thereof," such management and operation must be subject to any rule prescribed by the state imposing upon railroad corporations liability for the negligence of employés having superior authority over other employés.

This we understand to be the effect of the decision in Eddy v. Lafayette, 163 U. S. 456, 464, 16 Sup. Ct. 1082, in which the question arose whether the local statutes regulating the service of process against a railway corporation were applicable to actions against the receivers of such corporations. The trial court and the circuit court of appeals were of opinion that the third section of the judiciary act of March 3, 1887, c. 373, § 2 (24 Stat. 552, 554), authorizing suits to be brought against receivers of railroads without special leave of the court by which they were appointed, was intended to place receivers "upon the same plane with railroad companies," both as respects their liability to be sued for acts done while operating a railroad and as respects the mode of service of process. This court said:

"We concur in that view, and in the conclusion reached, that the service in the present case, on an agent of the receivers, was sufficient to bring them into court in a suit arising within the Indian Territory."

But it is contended that the Ohio statute is repugnant to the provision of the constitution of Ohio declaring that "all laws of a general nature shall have uniform operation throughout the state." Article 2, § 26. The argument made in support of this view by the learned counsel for the receiver may be thus summarized: That the act imposes a liability for damages for the negligence of fellow servants only as against a railroad company operating a railroad within Ohio; that it confers a right of action only upon employés of such railroad companies; that no other employer is subject to the liability, and no other employé is given the right; that the act selects from the general class of employers railroad companies operating railroads, and imposes upon them a special burden; that the act is special class legislation, not uniform throughout the

Digitized by Google

state, and applies to no person or company engaged in any other occupation employing servants, although the occupation be equally hazardous. Consequently, the act is special in its operation and effect, is confined to particular corporations engaged in a specific business, does not cover the whole subject of the relations of master and servant, and is not, therefore, of a general nature, and of uniform operation throughout the state, within the meaning of the constitution of Ohio.

In support of these views counsel have referred to Shaver v. Pennsylvania Co., 71 Fed. 931, which was an action to recover damages for personal injuries alleged to have resulted from the negligence of a railroad corporation and its agents. The defense was that the plaintiff, by becoming a member of an organization known as the "Voluntary Relief Department of the Pennsylvania Lines West of Pittsburgh," and accepting the benefits of said association, had agreed that the railroad company should be discharged from any and all liability to him on account of such injuries. The plaintiff demurred to the answer upon the ground that the agreement referred to was invalid under the above statute of Ohio of 1890, which, as we have seen, provides in its first section that:

"No railroad company, insurance company, or association, or other person shall demand, accept, require, or enter into any contract, agreement, stipulation with any other person about to enter, or in the employ of any railroad company whereby such person stipulates or agrees to surrender or waive any right to damages against any railroad company, thereafter arising for personal injury or death, or whereby he agrees to surrender or waive, in case he asserts the same, any other right whatsoever, and all such stipulations or agreements shall be void," etc.

Judge Ricks held that the contract relied on by the railroad company was valid, and that the statute of Ohio declaring it to be void was unconstitutional.

"The Ohio statute," he said, "in denying to the employés of a railroad corporation the right to make their own contracts concerning their own labor, is depriving them of 'liberty,' and of the right to exercise the privileges of manhood, 'without due process of law.' Being directed solely to employés of railroads, it is class legislation of the most vicious character. Laws must be not only uniform in their application throughout the territory over which the legislative jurisdiction extends, but they must apply to all classes of citizens alike. There cannot be one law for railroad employés, another law for employés in factories, and another law for employés on a farm or the highways. Class legislation is dangerous. Statutes intended to favor one class often become oppressive, tyrannical, and proscriptive to other classes never intended to be affected thereby; so that the framers of our constitution, learning from experience, wisely provided that the laws should be general in their nature and uniform throughout the state."

The court, elsewhere in its opinion, when considering the scope of the constitutional provision that all laws of a general nature shall have uniform operation throughout the state, said:

"The act under consideration, while it is general in its nature, applies only to railroad companies and their employés, and is not, therefore, general in its application, and does not operate uniformly on all classes of citizens. Under this statute, railroad companies are prohibited from making contracts which other corporations in the state are allowed to make. * * * The act under consideration is certainly one which impairs the rights of a large number of the citizens of Ohio to exercise a privilege which is dear to all persons, namely, that of making contracts concerning their own labor and the fruits thereof, and, so far as it relates to such contracts already made, impairs their validity. The act seems to

Digitized by Google

assume that a large class of the citizens of the state, namely, those employed by railroad corporations, are incapable of making contracts for their own labor."

It may be proper here to observe that in a case recently determined by the supreme court of Ohio a contract such as the one involved in Shaver's Case was held not to be interdicted by the above act of April 2, 1890 (87 Ohio Laws, 149), and was not contrary to public policy. Railway Co. v. Cox, 45 N. E. 641.

It is quite clear from an examination of Judge Ricks' opinion that he intended to decide nothing more—indeed, the case, under his view of the statute, required nothing more to be decided—than that the part of the act of 1890 relating to contracts or agreements, whereby a right to damages against a railroad company, arising from personal injury or death, was surrendered or waived when the employé became a member of the relief association referred to, was unconstitutional, as depriving the employés of railroad corporations of their liberty without due process of law. He had no occasion, in the case before him, to consider the validity of the third section of that act. The first section might be held void, leaving the third section in full force. Even if the act of 1890, in the particulars involved in Shaver's Case, and for the reasons stated by Judge Ricks, were held to be unconstitutional,—upon which question it is unnecessary to express an opinion,—the statute, in respect of the matters mentioned in the third section, can be sustained as one of a general nature, and having uniform operation throughout the state.

This general question has been considered by the supreme court of Ohio. In McGill v. State, 34 Ohio St. 238, the court, referring to the constitutional provision requiring all laws of a general nature to have a uniform operation throughout the state, said:

"A general law that land should not be sold upon execution for less than two-thirds of its appraised value was excluded from operation in several counties by local enactment. There were different laws in different counties respecting the descent and distribution of intestate property. Some statutes defining legal offenses were excluded in their operation from a large part of the state; and different penalties for a violation of the same act were, in some instances, provided for different localities. These are examples of the legislation to prevent which in the future, and the mischief resulting from it, this provision of the constitution was adopted. But no wider scope was claimed for it than to guard the future against the evils and inequalities resulting from legislation of the character complained of."

See, also, Lehman v. McBride, 15 Ohio St. 573, 653; Ex parte Falk, 42 Ohio St. 638, 641; Costello v. Village of Wyoming, 49 Ohio St. 202, 30 N. E. 613.

In State v. Nelson, 52 Ohio St. 88, 97, 39 N. E. 22, where the question was whether an act entitled "An act requiring persons, associations and corporations owning or operating street cars to provide for the well-being of the employés"—the act, in its provisions, being made applicable only to electric street cars other than trail cars—was in conflict with the constitutional provision requiring all laws of a general nature to have a uniform operation throughout the state, the court said:

"The act in question is clearly of a general nature, so that the only inquiry left is whether it is of uniform operation throughout the state. And here again

Digitized by Google

it is equally clear that the law is in operation throughout every part of the state, uniformly as to all classes therein named. Is this sufficient? Soon after the adoption of the constitution it was said by this court that the scope and purpose of this section was to prevent laws of a general nature from being in force in some counties and not in others, and these early cases have been followed ever since."

Again:

"Of late years an effort has frequently been made to claim for this section of the constitution a wider scope than to guard against the evils resulting from legislation of the character mentioned by Thurman, J., in Cass v. Dillon, 2 Ohio St. 607, Scott, J., in Lehman v. McBride, Boynton, J., in McGill v. State, and Okey, J., in Ex parte Falk; but such efforts have uniformly failed. The only statutes which have been declared in conflict with this section of the constitution are statutes making different classes of different parts of the territory of the state, such as cities, villages, etc. This section of the constitution requires that laws of a general nature shall have not only an operation, but a uniform operation, throughout the state; that is, the whole state, and not only in one or more counties. The operation must be uniform upon the subject-matter of the statute. It cannot operate upon the named subject-matter in one part of the state differently from what it operates upon it in other parts of the state; that is, the law must operate uniformly on the named subject-matter in every part of the state, and when it does that it complies with this section of the constitution. That this is the scope and purpose of this section appears from its language, the debates of the constitutional convention, and the uniform construction placed thereon by this court in the cases above cited, and others hereinafter referred to. * * * In Adler v. Whitbeck, 44 Ohio St. 539, 9 N. E. 672, an effort was made to have the statute there under consideration declared unconstitutional because its classification included saloons and excluded distilleries and breweries, but the effort failed. A similar effort was made in Senior v. Ratterman, 44 Ohio St. 661, 11 N. E. 321, because wholesale dealers and manufacturers were not included within the same class, and the effort again failed. A similar effort was made in State v. Turnpike Co., 37 Ohio St. 481, as to the classification of turnpikes, and the effort again failed. * * * The scope and force of this section of our constitution being as herein indicated, it is clear that the statute in question is not in conflict therewith. The statute is in operation in every part of the state, and operates uniformly upon the classes of persons therein designated in every part of the state. The act is clearly authorized as a police regulation to protect the health and promote the comfort of those engaged in operating electric cars."

The question under consideration is somewhat like that presented in Harwood v. Wentworth, 162 U. S. 547, 563, 16 Sup. Ct. 890. There the question was whether an act of the legislature of Arizona fixing the compensation of county officers, and for that purpose classifying the counties of the state according to the assessed valuation of property in each county, was a local or special act. If so, it was void, as repugnant to an act of congress declaring that the legislatures of the territories shall not pass local or special laws in certain cases. The practical effect of the act was to establish higher salaries in some counties for the particular officers named than for the same class of officers in other counties. "But," the supreme court said, "that does not make it a local or special law. The act is general in its operation; it applies to all counties in the territory; it prescribes a rule for the stated compensation of certain public officers; no officer of the classes named is exempted from its operation; and there is such a relation between the salaries fixed for each class of counties, and the equalized assessed valuation of property in them, respectively, as to

Digitized by Google

show that the act is not local and special in any just sense, but is general in its application to the whole territory, and designed to establish a system for compensating county officers that is not intrinsically unjust, nor capable of being applied for purposes merely local or special."

We do not deem it necessary to pursue this subject further. We think it clear that the Ohio statute is not obnoxious to the constitutional provision requiring all laws of a general nature to have a uniform operation throughout the state. As it applies to all railroad corporations operating railroads within the state, it is, within the meaning of the state constitution, general in its nature; and, as it applies to all of a given class of railroad employés, it operates uniformly throughout the state.

It is next contended by the plaintiff in error that if Van Dusen was injured by the negligence of Bartley, the conductor, he is not entitled to recover, for the reason that the latter was not negligent in the performance of any duty imposed by law on the master personally, but only in respect of the performance of work pertaining to him and other employés in the same work. The principal authorities cited in support of this view are Railroad Co. v. Keegan, 160 U. S. 259, 16 Sup. Ct. 269, and Stockmeyer v. Reed, 55 Fed. 259.

If this contention were sustained, the statute of Ohio would be deprived of all practical value, and the manifest object of the legislature in passing it would be defeated. The Keegan and Stockmeyer Cases enforced the general rule that a foreman or superintendent of a body of employés doing a particular service was a fellow servant of those under him, and, consequently, the common employer was not liable to one of them for the negligence of the other. The very object of the statute before us was to prevent the application of that rule in Ohio as between a railroad company and its employés. Hence it declared that every person in the employ of a railroad company, "having power or authority to direct or control any other employé of such company, is not the fellow servant, but the superior, of such other employé." If, by force of the statute, Bartley was not a fellow servant, but the superior, of Van Dusen, he did not become, within the meaning of the statute, a fellow servant simply because he did some work of the kind done by Van Dusen. The object of the statute was to make one to whom is committed by a railway company the authority to direct and control employés in the same service the representative, in respect of that service, of the common employer, so that his acts, within the scope of his employment, are the acts of the company, and his negligence its negligence.

That the evidence was such as to require the submission of the question of negligence to the jury is, in our judgment, too manifest to require discussion. Indeed, so far from there being no proof to support the allegation of negligence, the preponderance of evidence on that issue was with the plaintiff.

It is said that the damages found were excessive, and that the judgment below should, for that reason, be reversed. That was

Digitized by Google

a question for the consideration of the trial court on a motion for a new trial. Upon a writ of error this court can deal only with questions of law. If there was a case of disputed facts upon which the plaintiff was entitled to go to the jury,—as undoubtedly there was,—it was for the jury to assess the damages; and, if the trial court did not disturb the verdict upon the ground that the damages were excessive, that was the end of the question of damages. As that court laid down no rule for the assessment of damages that was erroneous in law, this court is without power to revise the judgment in respect of the amount of damages. It is restricted in its consideration of the case to questions of law. Railroad Co. v. Fraloff, 100 U. S. 24, 31.

It is alleged that error was committed in permitting plaintiff, against the objection of the defendant, to prove what Bartley, the conductor, said just after the plaintiff was injured. The conductor and those under him were very near each other during the performance of the work committed to them. Van Dusen testified that his hand was caught and held fast while the car that mashed it backed up five or ten feet. Getting his hand out as soon as the car backed, he came from between the cars, and walked towards the engine, holding his hand up. The engineer got off the engine, and, with Bartley, came towards Van Dusen. Being asked how long after the accident before Bartley met him, Van Dusen said: "It was not a minute,—that is, a minute after I got my hand out and walked towards the engine;" and that it may have been "six or seven car lengths" before he met Bartley. Being asked what Bartley said to him at that time, the question was objected to, but the court permitted him to answer, upon the ground that it came "within the rule of the res gestæ," and that "what was said by this plaintiff and what was said by the engineer or by the conductor in the very doing of this thing is a part of the thing itself." The plaintiff answered: "Well, I asked Mr. Bartley what in the world he was trying to do, coming back on me the second time without saying anything about making a second cut. He said: 'Ed, I am sorry. I was going to put this car on the elevator track. When I backed up, I did not see you. I did not know just where you was until I heard you holler.'"

We are of opinion that this evidence was properly admitted. Its exclusion was not required by the rule that "an act done by an agent cannot be varied, qualified, or explained, either by his declarations which amount to no more than a mere narrative of a past occurrence, or by an isolated conversation held or an isolated act done at a later period." Packet Co. v. Clough, 20 Wall. 528, 540. The case is rather covered by the rule formulated by Greenleaf (1 Greenl. Ev. § 113), and sanctioned by the supreme court in Railroad Co. v. O'Brien, 119 U. S. 99, 105, 7 Sup. Ct. 118, namely:

"The party's own admission, whenever made, may be given in evidence against him; but the admission or declaration of his agent binds him only when it is made during the continuance of the agency in regard to a transaction then depending, et dum fervet opus. It is because it is a verbal act, and part of the res gestæ, that it is admissible at all, and therefore it is not necessary to call the

Digitized by Google

agent to prove it; but wherever what he did is admissible in evidence, there it is competent to prove what he said about the act while he was doing it."

Judge Hammond, in an opinion overruling the motion for a new trial, properly indicated the situation, when he said that the conductor "almost immediately, and while the cars were moving, or had just stopped, and while the plaintiff was bleeding from the injury at that moment received, described his own part in bringing about the motion that effected the injury." The rule insisted upon for the exclusion of such declarations would, he said, "exclude everything from the res gestæ which did not occur on the very instant of the grinding of the flesh and bones by the colliding car." In O'Brien's Case the question was as to the admissibility of certain declarations of a railroad engineer as to the rate of speed at which his train was moving at the time of the accident. The court said:

"Although the speed of the train was, in some degree, subject to his control, still his authority, in that respect, did not carry with it authority to make declarations or admissions at a subsequent time as to the manner in which, on any particular trip, or at any designated point in his route, he had performed his duty. His declarations, after the accident had become a completed fact, and when he was not performing the duties of engineer, that the train, at the moment the plaintiff was injured, was being run at the rate of eighteen miles an hour, was not explanatory of anything in which he was then engaged. It did not accompany the act from which the injuries in question arose. It was, in its essence, the mere narration of a past occurrence, not a part of the res gestæ; simply an assertion or representation, in the course of conversation, as to a matter not then pending, and in respect of which his authority as engineer had been fully exerted."

We recognize the difficulty of laying down a rule upon this subject that would apply in every case. But we do not doubt that, both upon principle and authority, the declarations of Bartley, tending to show that the injury to Van Dusen was to be attributed to his (Bartley's) negligence, were admissible in evidence as part of the res gestæ.[1] These declarations cannot properly be characterized as hearsay, for they really accompanied the transaction out of which arose the injury. The principal matter was the doing of certain work under the supervision of one having authority to control those engaged in it. The statements of the conductor were made while the work was in progress, while the plaintiff was assisting him, and in presence of the fact necessary to be explained. They illustrated what had, up to the moment of such statements, been done by him in the prosecution of the work. What the conductor and Van Dusen set out together to do was not completed,

[1] Railroad Co. v. Ashley, 14 C. C. A. 368, 67 Fed. 209; Insurance Co. v. Cheever, 36 Ohio St. 201, 207; Keyser v. Railway Co., 66 Mich. 390, 33 N. W. 867; Rockwell v. Taylor, 41 Conn. 55, 59; Waldele v. Railroad Co., 95 N. Y. 274; Railroad Co. v. Coyle, 55 Pa. St. 402; Lund v. Inhabitants of Tyngsborough, 9 Cush. 36; Carrying Co. v. Gnuse, 137 Ill. 264, 27 N. E. 190; Hermes v. Railway Co., 80 Wis. 590, 50 N. W. 584; Hooker v. Railway Co., 76 Wis. 542, 44 N. W. 1085; Hill v. Com., 2 Grat. 594, 605; Elledge v. Railway Co., 100 Cal. 282, 34 Pac. 720; State v. Molisse, 38 La. Ann. 381; McLeod v. Ginther's Adm'r, 80 Ky. 399; Railroad Co. v. Foley (Ky.) 21 S. W. 866; Shafer v. Lacock, 168 Pa. St. 497, 32 Atl. 44; Baltimore & O. R. Co. v. State (Md.) 32 Atl. 201; Railway Co. v. Buck, 116 Ind. 566, 19 N. E. 453; Brownell v. Railroad Co., 47 Mo. 239.

Digitized by Google

and what the former said was almost simultaneous with the doing of the thing causing the injury. The infliction of the injury and his explanation of his conduct were so close together that they may be said to have occurred at the same time. His declarations, therefore, were not, in any proper sense, a mere narrative of past occurrences, but were part of the occasion out of which the plaintiff's cause of action arose. They served to disclose the nature and quality of the acts in question, and were made under circumstances precluding the possibility of premeditation, design, or deliberation on the part of the conductor. They were made on the spot where the injury occurred. To exclude them would be to make their admissibility in evidence depend wholly upon the matter of time, although the circumstances show such direct and immediate connection between the thing done and the declarations of the person having such thing in charge as to justify the court in characterizing the transaction as one continuous, uncompleted transaction, and such declarations to be part of it.

Having considered all the matters presented by the record which, in our judgment require consideration, and perceiving no error of law in the record, the judgment is affirmed.

(78 Fed. 708.)

EMIL KIEWERT CO. et al. v. JUNEAU et al.

(Circuit Court of Appeals, Sixth Circuit. February 2, 1897.)

No. 420.

MORTGAGES—MORTGAGEE IN POSSESSION—ACCOUNTING FOR RENTS—ESTOPPEL.

One J. made a deed of property owned by him to the president of the K. Co., as security for his indebtedness to the K. Co., existing and to be incurred; it being agreed between the parties that the rents of the premises, after paying expenses, should be applied on J.'s indebtedness. The K. Co.'s office and the residence of its president were at a great distance from the town where the property was situated, and they employed an agent on the spot to attend to the renting. J. occupied a part of the premises, took the principal charge of them, and assisted the agent in obtaining tenants. The accounts of rents collected, rendered from time to time by the agent of the K. Co., were submitted to and indorsed by J.; and no complaint was ever made by him of a want of diligence in renting, or that more rent might be obtained. *Held* that, on an accounting by the president of the K. Co. as mortgagee in possession, J. was estopped to claim that the mortgagee should be charged with more than the amount of rents actually collected.

Cross Appeals from the Circuit Court of the United States for the Western District of Michigan.

Bill to foreclose a mortgage, in form a deed, executed for the purpose of securing an indebtedness then due, and further indebtedness then contemplated. The mortgagor in August, 1888, was indebted in the sum of $1,590 to the complainant the Emil Kiewert Company, a corporation of the state of Wisconsin. To secure this he made an absolute deed of conveyance to Emil Kiewert, president of said corporation. It is conceded that this conveyance was intended to secure the debt then existing, and such further indebtedness as should from time to time be created, to the Emil Kiewert Company. It was understood that the said company, or Emil Kiewert as trustee, should take possession of the prem-

Digitized by Google

ises, make necessary repairs, and apply proceeds of rents first to costs of repairs, taxes, and expenses, and remainder, from time to time, upon the indebtedness intended to be secured. This relation lasted more than four years, when some misunderstanding as to the state of the accounts resulted in the filing of this bill and a cross bill by Juneau, who claimed, upon a true accounting, to have overpaid his indebtedness. The matters involved were referred to a special commissioner, who was directed to state an account, charging the complainant with all rents actually collected, and all which by proper diligence might have been collected. The report found that the mortgagor was chargeable with rents aggregating $9,322.42, including interest. He also found that Juneau was chargeable with an indebtedness, including interest, of $9,293.57, leaving a balance due Juneau of $28.91. Each party filed exceptions to this report. The principal ground of exception taken by the complainant was that the mortgagee had been erroneously charged with rents not collected aggregating about $3,362.34. This exception was in part sustained, the circuit judge, on the facts, holding that the failure to rent out the premises was the mutual fault of the complainant and defendant, and that the loss should therefore be divided between them. It was therefore directed that the accounts should be altered so as to charge complainants with but one-half of the net loss resulting from failure to rent out the mortgaged premises. This operated to credit complainants with $1,818.83, that being one-half the loss of rent, with interest. Deducting from this the balance of $28.91 found in favor of Juneau left the latter indebted in the sum of $1,789.92, as due June 1, 1894. All other exceptions were overruled. Both parties have appealed, and assigned as error the overruling of their several exceptions to said report.

Fred Scheiber, for Emil Kiewert Co. et al.

Birney Hoyt, for Juneau et al.

Before HARLAN, Circuit Justice, and TAFT and LURTON, Circuit Judges.

After making the foregoing statement of facts, the opinion of the court was delivered by LURTON, Circuit Judge.

The mortgaged property consisted of a block of three two-story business houses, situated in the small village of Ironwood, Gogebic county, Mich. The lower rooms were fitted up for business purposes, and the upper story was adapted for separate use as apartments or offices. Elisha Juneau, the owner and mortgagor, had kept a saloon in one of them, and continued to do so for much of the time embraced in the accounting. For the room so occupied, he, for a time, paid rent to the agent of the complainant company. The complainant corporation had its place of business in the city of Milwaukee, Wis., and Emil Kiewert, its chief officer, and the trustee under the mortgage in question, also resided there. Under the circumstances, we shall treat this as if a mortgage made direct to the mortgagee, the holder of the legal title being the president of the mortgagee company. The object of the mortgage was to enable the mortgagee to collect current rents from tenants then in the property, or such as should succeed them, and apply the net receipts on the debt of Juneau then existing, or which might be thereafter created during its existence. Neither the complainant nor Emil Kiewert, the trustee, ever personally occupied any part of the premises. The great distance between the residence of complainants and the location of the mortgaged property made it necessary to intrust the renting and care of the property to a local agent. To this end, one Otto E. Karste, a resident banker, was made the agent of the trustee, and intrusted with

Digitized by Google

the care and rental of the mortgaged premises. The actual rents collected and accounted for up to the close of the account stated by the special commissioner aggregated $3,879.10, excluding interest. Parts of the premises were from time to time vacant and unoccupied. Expert evidence was taken as to what would be a reasonable rental for the unoccupied premises. This the commissioner fixed at something in excess of $3,000, and reported that the mortgagee had not exercised due and reasonable diligence in respect to keeping said premises rented out, and was therefore liable for the rents which by such diligence he ought to have realized. The exception of complainants to this charge was so far sustained by the court below as to divide equally the loss consequent upon the nonrenting of a part of the premises between the mortgagee and mortgagor, the court being of opinion that the fault was mutual.

There are a great many peculiarities about this case which made the relation between the complainants and the mortgagor, Juneau, quite exceptional. Juneau himself occupied one of the houses, and paid rent regularly for a time. For the remainder of the period the house he occupied is excluded from consideration, inasmuch as he himself was in possession. Karste, the agent of complainants, was a business man of character, and testified that he was unable to obtain acceptable tenants for much of the time, and that he mainly relied upon Juneau to secure tenants. Juneau was on the ground all the time, and did assume and exercise much authority over the entire premises; occasionally using or permitting the use of vacant premises as suited his occasion or fancies. He was in the habit of taking people who made inquiries about the premises to Karste, but seems in no active way to have sought out tenants. Ironwood experienced a period of great business depression between 1891 and 1894, which much affected rentals. Whether the failure to obtain tenants was due to the inactivity of Karste and Juneau, or to this general business depression, is, on the evidence, a question of much doubt. One fact is of great importance, and that is that, during this entire relationship, stated accounts were periodically made out by Karste, showing rents collected and moneys disbursed, which, after submission and indorsement by Juneau, were forwarded to the complainants. During this whole period, Juneau made no complaint to Karste as to the incorrectness of these statements, or as to any neglect in obtaining tenants. Neither did he make the slightest complaint to the mortgagors of the inefficiency or neglect of their agent. He knew precisely what Karste was doing or neglecting to do. He was himself voluntarily assisting in the renting of the premises, and was vitally interested in obtaining tenants and securing rents. He was in frequent communication, by correspondence and personally, with complainants during all this time, and yet made no complaint as to the management of this matter. Good faith required him to speak out, if he was conscious of any want of due diligence upon the part of Karste. His conduct was calculated to mislead, and could have no other effect than to induce the absent mortgagees

Digitized by Google

to believe that due diligence was being exercised touching the management of the mortgaged premises. Undoubtedly, a mortgagee who takes possession before foreclosure of the premises is responsible for the reasonable rental value of the premises, if he actually occupy them. So, if he take possession for the purpose of renting them out, he is responsible for due diligence and reasonable thrift in obtaining acceptable tenants, in the collection of rents, and in the preservation of the property. His duty in possession is that of the ordinary prudent owner, and his liability, where he does not personally occupy, is for actual negligence in failing to make the property as productive as it might be in the hands of a reasonably careful and prudent owner. In Scruggs v. Railroad Co., 108 U. S. 368–375, 2 Sup. Ct. 780, it was said that, where the mortgagee's "possession is by tenant, she is accountable for such rents and profits as she could by reasonable diligence have received." But in this case the mortgagee, whose possession was by tenant, had employed a suitable and responsible agent. Undoubtedly, such a mortgagee cannot wholly discharge himself from all accountability to a mortgagor by proof that the management of the property had been intrusted to capable and responsible agents. For the neglect of such agents the mortgagee must ordinarily be responsible. But this case presents peculiar circumstances. The mortgagor was upon the premises constantly, and was relied upon largely by the agent to secure tenants, and did, in a way, interest himself in securing renters. The facts of this case make one where the mortgagor participated in the management of the mortgaged premises. If there was inefficient advertisement for tenants, or inactivity in securing acceptable renters, it was, as found by the circuit court, the result of the mutual fault of Juneau and Karste. If, as Juneau now claims, Karste was not duly diligent,—if he neglected to close with acceptable tenants or sufficiently advertise premises,—Juneau was at all times cognizant of such negligence. Yet he made no complaint, and gave no notice to the absent mortgagee of the agent's neglect, or of his intention to hold complainant to the technical responsibility of a mortgagee in possession. His participation in the mismanagement of this property, coupled with his silence, under the circumstances, makes it grossly unjust that he should now be allowed to hold the complainants for any part of a loss which might have been avoided but for his own inactivity, and neglect to notify the complainants of facts known to him and not known to them. In Hughes v. Williams, 12 Ves. 493, the facts were much those of this case. There it was sought to charge a mortgagee with negligence in underletting the premises. The lord chancellor said as to this:

"Another circumstance that weighs with me,—that the mortgagor, if he knows the estate is underlet, ought to give notice to the mortgagee, and to afford his advice and aid, for the purpose of making the estate as productive as possible. If he communicate to the mortgagee plans of improvement in his contemplation, which were disappointed by the embarrassment of his affairs, the court might take a stricter view of the mortgagee's conduct. In this instance, not only such notice was not given, but, during this whole period of sixteen years while the mortgagor was out of possession, he never stated that the estate was not managed as it

Digitized by Google

might be. Can the mortgagor lie by, not giving notice that a great rent may be made, and come afterwards, by way of penal inquiry, to charge the mortgagee with the effect of his own negligence?"

The mortgagee's liability for rent, where his possession is only by tenants, must rest upon evidence of actual negligence, under all the facts of the case. This principle we think is fully supported by the authorities. 4 Kent, Comm. (12th Ed.) p. 166; 3 Pom. Eq. Jur. (2d Ed.) § 1216; Murdock v. Clarke, 90 Cal. 427, 27 Pac. 275; Gresham v. Ware, 79 Ala. 192; Hughes v. Williams, 12 Ves. 493; Van Buren v. Olmstead, 5 Paige, 9; Gerrish v. Black, 104 Mass. 400–404. Though Juneau was under no legal duty to aid or assist the mortgagee's agent in the renting of the mortgaged premises, it is not unjust or inequitable to hold that his voluntary co-operation with that agent involved at least the duty of seasonably complaining to the ignorant and absent mortgagee of the mismanagement of which he now for the first time complains. The special commissioner took no notice of this misconduct, and the learned circuit judge was of opinion that its only effect should be to apportion the consequences. We think it wholly estops the defendant to now assert any claim for mutual negligence aggravated by his remarkable silence when it was his duty to speak. For this reason we think the account should be recast so as to charge complainants only with the rents actually reported as collected.

The other assignments of error must be overruled. They all involve disputed questions of fact, upon which both the special commissioner and court have agreed. Under such circumstances, a very plain showing of mistake must appear, to authorize this court to go behind such a report and decree of confirmation. Camden v. Stuart, 144 U. S. 104–118, 12 Sup. Ct. 585; Tilghman v. Proctor, 125 U. S. 136, 8 Sup. Ct. 894; Kimberly v. Arms, 129 U. S. 512, 9 Sup. Ct. 355; Turley v. Turley, 85 Tenn. 251, 1 S. W. 891. The cause will be remanded, and the decree modified in the particular directed. The costs of appeal will be paid by Juneau.

(78 Fed. 741.)

ROLLINS et al. v. BOARD OF COM'RS OF GUNNISON COUNTY, COLO.

(Circuit Court of Appeals, Eighth Circuit. January 29, 1897.)

No. 856.

BILLS OF EXCEPTIONS—POWER TO AMEND—LEAVE OF APPELLATE COURT.

An appellate court will not make an order authorizing the court below to amend the bill of exceptions so as to show whether or not it contains all the evidence produced at the trial; for, if the amendment be to make the record speak the truth, when by mistake it speaks an untruth, then the court below has authority to allow it, without permission, notwithstanding the lapse of the term; and, if it be not of that character, the power to make it is gone, and cannot be restored by any action of the appellate court.

In Error to the Circuit Court of the United States for the District of Colorado.

Digitized by Google

This was an action by E. H. Rollins & Son against the board of commissioners of Gunnison county, Colo., to recover on coupons cut from county bonds. At the trial the jury, by direction of the court, returned a verdict for defendant, and judgment was entered accordingly. Plaintiffs thereupon sued out this writ of error, and they have now moved the court to make an order authorizing the court below to amend the bill of exceptions, so as to show whether or not it contains all the evidence produced at the trial.

Willard Teller, for the motion.
W. H. Bryant, opposed.

Before SANBORN and THAYER, Circuit Judges, and LOCHREN, District Judge.

PER CURIAM. A motion is made in this case in behalf of the plaintiffs in error to enter an order authorizing the circuit court of the United States for the district of Colorado to amend the bill of exceptions, as it appears in the record, so as to show whether the same does or does not contain all the evidence produced on the trial of the case. This court has heretofore decided in Bank v. Perry, 32 U. S. App. 15, 14 C. C. A. 273, 66 Fed. 887, that a trial court has the power to correct its record so as to make it speak the truth when by mistake it speaks an untruth, even after the lapse of the term at which the judgment was rendered, and after the record in the case has been removed to an appellate court by a writ of error. See, also, Walker v. State, 102 Ind. 502, 1 N. E. 856; Seymour v. Harrow Co., 81 Ala. 250, 1 South. 45; Whiting v. Society, 8 C. C. A. 558, 60 Fed. 197. It results from this rule that the alleged mistake that is said to have been made in formulating the bill of exceptions can be corrected by the trial court without the leave or sanction of this court, provided it is a mistake falling within the rule aforesaid, such as may be corrected by amendment. No order of this court is necessary to enable the circuit court to amend the record in the respect desired if we assume that the correction is one which the circuit court was authorized to make after the lapse of the term at which the judgment was rendered; and no order made by this court would confer any authority upon the circuit court in addition to that which it now has. It was held by the supreme court of Indiana in Seig v. Long, 72 Ind. 18, that the power to amend a bill of exceptions by adding thereto a statement that it contained all the evidence produced at the trial cannot be exercised by the trial court after the lapse of the term at which the judgment was rendered, and the bill of exceptions was signed, sealed, and filed. If this be so, if the amendment sought is of such nature that the power to make it has been lost by the trial court by the lapse of the term at which the final judgment was rendered, then it is obvious that this court cannot restore the lost power by any order which it may now make. It is the function of this court to review the record of the trial court, and to determine whether it discloses a reversible error. It is not within its province to enlarge the authority of the trial court with respect to settling bills of exceptions, or to enlarge its power to amend them when once signed and

Digitized by Google

filed. We think, therefore, that in either aspect of the case the order which we are asked to enter is one which we ought not to make, because it would not alter in any respect the power or duty of the trial court in the matter of making the amendment. The motion must accordingly be denied.

(78 Fed. 745.)

ST. LOUIS, I. M. & S. RY. CO. v. EDWARDS.

(Circuit Court of Appeals, Eighth Circuit. January 25, 1897.)

No. 759.

1. OPINION EVIDENCE—DAMAGE TO CATTLE BY CARRIER'S DELAY.
   Upon the question of the amount of damages to a number of cattle, caused by the negligent delay of a carrier in delivering them, a witness, who is familiar with the handling and transportation of cattle and with their market value, and has attended the cattle in question during their transportation, may give his opinion as to the amount of damage sustained by them in consequence of the detention, and as to the difference in their value between the condition in which they arrived at their destination and that in which they would have arrived if there had been no delay.
2. CARRIERS—DAMAGE TO CATTLE—DELAY OF CONNECTING CARRIER.
   Where a carrier had undertaken to transport goods of a shipper from one point to another, the fact that a delay in their delivery was caused by the fault of another carrier, who has no contractual relation with the shipper, but who had contracted with the first carrier to carry the goods a part of the distance, is no defense to an action against the first carrier for damages for the delay.

In Error to the Circuit Court of the United States for the Eastern District of Arkansas.

This action was brought in the circuit court of the United States for the Eastern district of Arkansas by J. L. Edwards, the defendant in error, against the St. Louis, Iron Mountain & Southern Railway Company, the plaintiff in error, to recover damages for negligently delaying the transportation of 847 head of cattle over the defendant's road. The plaintiff in the action recovered judgment in the lower court, and the defendant sued out this writ of error. The cattle were detained in the defendant's cars 12 or 15 hours in excess of the limit allowed by the act of congress, during the most of which time the cars were standing still. To prove the damage sustained by the cattle by reason of their long and negligent detention in the cars, the plaintiff called a witness, who was shown to have been extensively engaged for many years in buying, selling, and feeding cattle, and in shipping them by rail and attending them in transit, and who attended the shipment of the cattle in controversy, and was familiar with their market value, and the effect upon them of their long detention in the cars, and propounded to him the following questions: "Q. From your observation of these cattle at that time, and your knowledge of cattle, can you state what damage they had sustained? A. My judgment is, they sustained a damage of three dollars a head. Q. Doctor, state, if you can, what the difference in the value of these cattle was per head between the condition in which they arrived as you saw them, and the condition in which they would have arrived had they gone in on proper time, and with proper transportation. A. Three dollars a head." The defendant made timely objections to each of these questions upon the ground that "it was incompetent and improper, and for the further reason that it called for an opinion as to the value, which was wholly within the province of the jury"; and it also objected to the answers to each of the questions because "it was incompetent and improper, and for the further reason that it was an opinion as to value, which was wholly within the province of the jury." The court overruled these objec-

Digitized by Google

tions, to which ruling of the court the defendant duly excepted, and has assigned the same for error.

Geo. E. Dodge, B. S. Johnson, and J. E. Williams, for plaintiff in error.

T. E. Webber, for defendant in error.

Before CALDWELL, SANBORN, and THAYER, Circuit Judges.

CALDWELL, Circuit Judge, after stating the case as above, delivered the opinion of the court.

The objection to the testimony was, not that the witness was not qualified to give an opinion as to the damage to the cattle, but it was that the question "called for an opinion as to values, which was wholly within the province of the jury." The general rule undoubtedly is that witnesses are to testify to facts, and not to give their opinions; but this rule has its exceptions as familiar and well settled as the rule itself. The exceptions rest upon the common ground of necessity. Among these exceptions is this one: That a witness, having special knowledge and experience as to the value of property animate or inanimate, and as to how the value of such property is affected by certain conditions or treatment, may give his opinion as to how much the property was damaged or benefited by such conditions or treatment. In many cases witnesses are allowed to testify to their opinions, not because they are experts in the technical sense of that term, but because they have special knowledge of the particular facts in the case, which the jurors have not. It is manifest that one who has never handled or shipped cattle by rail, and has never looked after and attended them while in the cars en route to their destination, can have no accurate conception of the effect upon cattle of confining them in cars standing still on the track for 10 or more hours at the end of a long journey. It does not accord with reason or experience to say that a jury composed of merchants, bankers, tailors, shoemakers, or others, who know absolutely nothing about raising or shipping cattle, or the effect upon them of detaining them for an unreasonable length of time in cars standing still on the track, are as capable of estimating the effect of such detention as an experienced cattle man, who has been engaged in handling and shipping cattle by the thousands for almost the space of a human life, and who was present with the cattle, attending to them, during their transportation. It is no answer to this to say that perchance there might be on the jury a farmer or cattle man who had had some experience in handling and shipping cattle, for it is a rule that a juryman cannot testify, in the jury room, to his fellows about facts within his personal knowledge, and, if he does, the verdict will be set aside. Nor is it any answer to say that the witness can tell the jury how long the cattle were in the cars, or how they looked and acted, and that from that imperfect information the jury may arrive at a correct conclusion as to the damage. The poverty of the English language makes it absolutely impossible for a witness to present to the minds of the jurors the appearance of cattle, and what that appearance denotes, as it is presented to his practiced and experienced eyes. The ex-

Digitized by Google

perience of the witness and the appearance of the cattle cannot be photographed on the minds of the jurors. The knowledge of the condition of these cattle, and how that condition affected their value, must of necessity have existed in the mind of the witness who had had such a large and extended experience in shipping cattle with far greater clearness and certainty than it could have been communicated to the minds of the jurors by any statement he might have made of what he saw merely, however clear and lucid such statement might have been. It is obvious that, if witnesses were to be permitted to state to a jury those facts only of which they have absolute knowledge, not only the range of inquiry, but the province of remedial justice, would be very materially contracted. Gulf, C. & S. F. Ry. Co. v. Washington, 4 U. S. App. 121, 1 C. C. A. 286, 49 Fed. 347; Harpending v. Shoemaker, 37 Barb. 270. It is clear upon principle and authority that the objections to the questions and answers were rightly overruled.

In Clifford v. Richardson, 18 Vt. 626, the court said:

"The facts are sometimes incapable of being presented with their proper force and significance to any but the observer himself, and it often happens that the triers are not qualified, from experience in the ordinary affairs of life, duly to appreciate all the material facts when proved. Under these circumstances the opinions of witnesses must, of necessity, be received."

In Shattuck v. Railroad Co., 6 Allen, 115, the supreme judicial court of Massachusetts said:

"It is settled in this commonwealth that where the value of property, real or personal, is in controversy, persons acquainted with it may state their opinion as to its value; also where the amount of damage done to property is in controversy such persons may state their opinion as to the amount of the damage. This is permitted as an exception to the general rule, and not strictly on the ground that such persons are experts; for such an application of that term would greatly extend its signification. The persons who testify are not supposed to have science or skill superior to that of the jurors; they have merely a knowledge of the particular facts in the case which the jurors have not. And as value rests merely in opinion, this exception to the general rule that witnesses must be confined to facts, and cannot give opinions, is founded in necessity and obvious propriety. Walker v. Boston, 8 Cush. 279; Dwight v. Commissioners, 11 Cush. 201; Vandine v. Burpee, 13 Metc. (Mass.) 288; Wyman v. Railroad Co., Id. 326; Clark v. Baird, 9 N. Y. 183."

And in a later case in the same court (Swan v. Middlesex Co., 101 Mass. 173, 178), the court, speaking by Judge Gray, now Mr. Justice Gray of the supreme court of the United States, said:

"The only objections taken at the trial, so far as they applied to each of the witnesses, were to the admission of the question 'what, in his opinion, would be the effect upon the value of the estate in question, of widening the street and cutting off the land and trees,' and to the answer to this question given on direct examination. The grounds assigned for these objections were twofold: because the witnesses were not qualified to answer the question, and because it did not relate to a matter upon which the opinion of any witness would be admissible. Neither of these grounds is tenable. * * * These opinions are admitted, not as being the opinions of experts, strictly so called, for they are not founded on special study or training or professional experience; but rather from necessity, upon the ground that they depend upon knowledge which any one may acquire, but which the jury may not have; and that they are the most satisfactory, and often the only obtainable, evidence of the fact to be proved. Dwight v. Commissioners, 11 Cush. 203; Shattuck v. Railroad Co., 6 Allen, 116, 117; Whitman v. Railroad Co., 7 Allen, 316, and cases there cited. The same rule has prevailed

Digitized by Google

in courts of authority in other states. Kellogg v. Krauser, 14 Serg. & R. 137; Warren v. Wheeler, 21 Me. 484; Clark v. Baird, 9 N. Y. 183."

In Polk v. Coffin, 9 Cal. 56, the action was to recover damages to cattle by falling through the defendant's wharf, and the assignment of error was exactly the same that it is in this case. It was, as stated by counsel for the plaintiff in error, that:

"The court allowed the plaintiff Polk to prove by his witness John Hensley his opinion of the damage, in money, done to the cattle, as the mode of ascertaining the amount of damage sustained by such plaintiff. To this mode of proving damages the defendants' counsel objected. The objection was overruled, and defendants excepted. There is nothing in the case showing that this witness was competent to determine the amount of damages; this was the province of the jury upon evidence of facts."

This is precisely the contention of the plaintiff in error in this case. After referring to all the points made by the plaintiff in error, the court said:

"We do not think any of the points well taken. The witness Hensley testified that his business was that of a stock raiser, and, therefore, he was capable of forming an accurate judgment as to the actual injury sustained by the stock, and the consequent depreciation of their value."

In Railroad Co. v. Thompson, 10 Md. 76, 85, the court said:

"On questions of science, skill, or trade, or other of the like kind, persons of skill may testify not only to facts, but are permitted to give their opinions in evidence. 1 Greenl. Ev. § 440. And so accordingly it has been held that 'persons accustomed to observe the habits of fish have been permitted to give in evidence their opinions as to the ability of the fish to overcome certain obstructions in the rivers which they were accustomed to ascend.' Id. If this be so, we see no reason why one who is familiar, from long observation, with the habits of cattle, shall not be permitted to give his opinion as to the probable influence of certain causes on their condition. In this record it appears from the testimony of Baker, that 'an experienced grazier can tell by the look of cattle whether they have been frightened and scared or disturbed in the pasture.' "

In a criminal prosecution for maliciously injuring a mule by inflicting a cut upon it, it was material under the statute to prove "the amount of the injury done" to the mule, and witnesses were permitted to give their opinions as to the amount the mule was damaged, and the court said:

"We think the court below committed no error in permitting the state to prove that the damage or injury done to the mule was fifty dollars. Considering this evidence in connection with the evidence which precedes it, we understand it to amount to nothing more than the expression of the opinion of the witnesses that the value of the mule was diminished fifty dollars by the injury done to it. It is but a comparison of the value before and after the injury, and such a comparison it was certainly competent for the witness to make." Johnson v. State, 37 Ala. 457.

In the case of Railroad Co. v. Woosley, 85 Ill. 370, 373, the court said:

"Objection is also urged that witnesses were allowed to give their opinions of the amount of damages sustained. The witnesses first stated that they had personal knowledge of the alleged injuries on which the claim for damages is based, and detailed their character. It was then competent to receive their opinions as to the amount of the damages sustained. Cooper v. Randall, 59 Ill. 317; Railroad Co. v. Henry, 79 Ill. 299."

In Railroad Co. v. Haslam, 73 Ill. 494, 497, the court said:

"Witnesses were allowed to give their opinions as to the damages sustained by the several claimants by reason of the construction of the railroad, notwithstand-

Digitized by Google

ing the objection of appellant. This practice is warranted by the rule stated in Coke Co. v. Graham, 35 Ill. 346. It is one mode of arriving at the true measure of damages, and, when the witness possesses peculiar knowledge of the facts, it is often valuable evidence. The rule has its foundation in obvious necessity. It is sometimes very difficult to convey to the mind of the jury an accurate idea of the location of the premises, and exactly how they may be affected by the contemplated improvements. This difficulty has given rise to an exception to the general rule that the witness must be confined to a detailed statement of facts. In such cases his opinion as to the damage sustained is admissible, and is to be considered in connection with the other evidence in the case."

In Railway Co. v. Warren, 137 U. S. 348, 11 Sup. Ct. 96, exceptions had been taken at the trial to receiving the opinions of witnesses as to the value of the property in controversy. Mr. Justice Brewer, speaking for the court, said:

"It is not questioned by the counsel for plaintiff in error that the general rule is that value may be proved by the opinion of any witness who possesses sufficient knowledge on the subject, but their contention is that the witness permitted to testify had no such sufficient knowledge. * * * After a witness has testified that he knows the property, and its value, he may be called upon to state such value. The means and extent of his information, and therefore the worth of his opinion, may be developed at length on cross-examination. And it is fully open to the adverse party, if not satisfied with the values thus given, to call witnesses in the extent of whose knowledge and the weight of whose opinions it has confidence."

"But when," says Dr. Wharton, "as is often the case, these facts can be best expressed by the damage they caused, then this damage and its extent may be testified to by the witness." 1 Whart. Ev. (3d Ed.) § 450. Judge Sutherland, in his valuable treatise on Damages, after reviewing the authorities, says:

"There is a growing tendency to the doctrine, if it be not already established, that opinions of ordinary witnesses may be given upon matters of which they have personal knowledge in all cases in which, from the very nature of the subject, the facts disconnected from such opinions cannot be presented to a jury so as to enable them to pass upon the question with the requisite knowledge." Suth. Dam. § 442.

The defendant set up as a defense that the detention of the cattle in the cars was occasioned by the delay in transferring the cars containing them across the Mississippi river from West Memphis to Memphis, and that the inclines and transfer boats used for that purpose were not "its property, nor in its control or possession," but belonged to another corporation, namely, the Kansas City, Ft. Scott & Memphis Railroad Company, "whose duty it was to transfer the same." There were no contractual relations between the plaintiff and the last-named company. The defendant had contracted to carry the plaintiff's cattle to Memphis. It was no concern of the plaintiff what cars, bridges, inclines, or boats the defendant used, or expected to use, for this purpose. If, as alleged in the answer, it was the duty of the Kansas City, Ft. Scott & Memphis Railroad Company to transfer the defendant's cars from West Memphis to Memphis, it was a duty it owed to the defendant and for a breach of which it is liable to the defendant; but clearly, for the purpose of determining the rights and liabilities of the plaintiff and defendant in this action, the Kansas City, Ft. Scott & Memphis Railroad Company, upon the evidence, must be regarded as the defendant's agent for the pur-

Digitized by Google

pose of transferring its cars. Railroad Co. v. Friel, 23 C. C. A. 77, 77 Fed. 126. Moreover, the contract between the defendant and the Kansas City, Ft. Scott & Memphis Railroad Company relating to the transfer of cars from West Memphis to Memphis contains the stipulation that "loss and damage to cars and their contents, whether passenger or freight, shall be borne by the company for which the car or cars are being transferred."

Other errors are assigned, but, as none of them is of any general importance, a separate consideration of them is unnecessary. They have all been carefully considered, and found to be without merit. The judgment of the circuit court is affirmed.

(78 Fed. 754.)

TRAVELERS' INS. CO. OF HARTFORD v. RANDOLPH.

(Circuit Court of Appeals, Sixth Circuit. February 2, 1897.)

No. 439.

1. TRIAL—PEREMPTORY INSTRUCTION—WAIVER.
   The failure of a defendant, at the close of the plaintiff's evidence, to ask a peremptory instruction, will not of itself preclude such a motion at the close of the whole evidence.

2. SAME—WHEN GIVEN.
   A peremptory instruction should not be given to a jury unless, upon a survey of the whole evidence, and giving effect to every inference to be fairly or reasonably drawn from it, the case is palpably for the party asking such instruction; and a case cannot properly be withdrawn from the jury because, in the judgment of the court, there is a preponderance of evidence in favor of the party asking such instruction. Railway Co. v. Lowery, 20 C. C. A. 596, 74 Fed. 463, reaffirmed.

3. ACCIDENT INSURANCE—EXCEPTIONS FROM RISK—VOLUNTARY EXPOSURE.
   The expression "voluntary exposure to unnecessary danger," used in stating the exceptions to the liability of an insurance company upon an accident policy, refers only to dangers of a real, substantial character, which the insured recognized, but to which he, nevertheless, purposely and consciously exposed himself, intending at the time to assume all the risks of the situation.

4. SAME—QUESTION FOR JURY.
   Under a policy of accident insurance, which expressly declares that the insurance does not cover entering or trying to enter or leave a moving conveyance using steam as a motive power, and which also excepts injuries due to voluntary exposure to unnecessary danger, voluntary riding upon the platform of a rapidly moving railroad car, though there may be no necessity therefor, is not, in itself and as matter of law, a voluntary exposure to unnecessary danger, but presents a question of fact to be determined by the jury under all the evidence.

5. SAME—NEGLIGENCE OF INSURED.
   Cases determining that certain acts constitute contributory negligence, such as to defeat a recovery for personal injuries claimed to have been caused by the negligence of another, have no application to actions upon accident insurance policies which do not in terms exempt the insurer from liability for injuries caused by the negligence of the insured, since the liability upon such policies depends upon contract, and the negligence of the plaintiff is no defense unless expressly made so.

6. SAME.
   Where an accident insurance policy exempts the insurer from liability for injuries received while violating rules of a corporation, it is proper, in an ac-

Digitized by Google

tion on the policy, to leave to the jury, upon all the evidence, the question whether the insured knew of a rule of a corporation which it is claimed he was violating when injured, and to charge them that, in order for the insured to be bound by the rule, it must be one which the corporation enforced or used reasonable effort to enforce.

In Error to the Circuit Court of the United States for the Western District of Tennessee.

J. K. Flippin and Luke E. Wright, for plaintiff in error.

Geo. Randolph, Samuel Holloway, and Wm. M. Randolph, for defendant in error.

Before HARLAN, Circuit Justice, LURTON, Circuit Judge, and SAGE, District Judge.

HARLAN, Circuit Justice. This is an action upon insurance contracts evidenced by an annual policy and two accident tickets issued to Albert G. Mitchell by the Travelers' Insurance Company of Hartford, Conn. There were a verdict and judgment for the plaintiff.

By its policy of June 5, 1894, that company insured Mitchell, a bookkeeper by occupation, in the sum of $50 per week, against loss of time, not exceeding 26 consecutive weeks, resulting from bodily injuries effected through external, violent, and accidental means, which should, independently of all other causes, immediately and wholly disable him from transacting any kind of business pertaining to his occupation. If death ensued from such injuries alone within 90 days, then the company agreed to pay the sum of $10,000 to the legal representatives of the assured. But the policy declared that the insurance did not cover "disappearance; nor suicide, sane or insane; nor injuries of which there is no visible mark on the body (the body itself in case of death not being deemed such mark); nor accident, nor death, nor loss of limb or sight, nor disability, resulting wholly or partly, directly or indirectly, from any of the following causes, or while so engaged or affected: Disease or bodily infirmity; hernia; fits; vertigo; sleep-walking; medical or surgical treatment, except amputations necessitated solely by injuries, and made within ninety days after accident; intoxication or narcotics; voluntary or involuntary taking of poison, or contact with poisonous substances, or inhaling of any gas or vapor; sunstroke or freezing; dueling or fighting; war or riot; intentional injuries (inflicted by the insured or by any other person); voluntary overexertion; violating law; violating rules of a corporation; voluntary exposure to unnecessary danger; expeditions into wild and uncivilized countries; entering or trying to enter or leave a moving conveyance using steam as a motive power, except cable cars; riding in or on any conveyance not provided for transportation of passengers; walking or being on a railway bridge or roadbed (railway employés excepted)."

The same provisions, substantially, are set forth in the accident tickets issued by the company.

Digitized by Google

The defendant pleaded that it did not owe the plaintiff in manner and form as alleged, and that proper proofs of death were not furnished.

It also pleaded: That the assured committed suicide on the 9th day of November, 1894, by "voluntarily, and with intent to take his life, jumping off" a train of cars, en route from St. Louis to Memphis, Tenn., and which at the time was moving 35 miles an hour, he being a passenger on such train.

That the assured "intentionally and of a purpose sprang or jumped" from said train, with the intent of inflicting injury upon himself, and, as a result thereof, he was dashed against the ground with great violence, receiving injuries from which he shortly afterwards died.

That when the train approached Memphis, at the rate of 35 miles an hour, the assured voluntarily and unnecessarily left his seat in the sleeping car, where he was safe and free from danger, and went out of such car and upon its platform, thence to the rear platform of the next car ahead, thence to the lower step of the last-named platform, the same being a very dangerous place, from which, by any sudden jar or movement of the car, he was liable to fall or be thrown from the train; that, in standing on said lower step of the platform, it was necessary for him to hold to the hand railing provided on each side for the use of persons getting off and on the car; that while in that position, the cars moving at a high rate of speed, he was in great danger of losing his hold by reason of the moving of the car or from other causes, and of being thrown from the step, and injured or killed, "all of which danger was obvious and well known to the said Mitchell"; that the assured went into said place of great and unnecessary danger without any reasonable cause therefor, and, while there, "fell or sprang" from the car step, receiving great injuries, from which he shortly died; and that, by reason of this voluntary exposure of the assured to unnecessary danger, the contract of insurance between him and the defendant did not attach or become operative, nor cover the injuries and resulting death of the assured.

That the insured, while the car was moving at the rate of 35 miles an hour, attempted to leave, and did leave, the same, by "stepping or leaping" therefrom, and thereby he was thrown to the ground with great violence, and received injuries from which he shortly thereafter died.

That while standing upon the lower step of the rear platform of the car immediately in front of the sleeping car, as above stated, the insured was intoxicated, and, being so intoxicated, either "fell or sprang" from such step when the car was moving at the above rate of speed, and was dashed violently against the ground, receiving fatal injuries, from which he shortly died. And

That the assured came to his death by reason of his standing upon the platform, as above stated, in violation of a rule of the railroad company which was then, and had been for many years, in force, forbidding passengers to stand or ride on the platforms of its cars while they were in motion.

Digitized by Google

The plaintiff filed replications, which put in issue all the material facts set out in the several pleas.

Mitchell was a resident of the city of Memphis, where for many years prior to his death he had been employed as a bookkeeper. He was unmarried, about 46 years of age, and lived with a widowed sister and her children in that city. It seemed to have been his habit when traveling any distance on railroads to buy accident tickets, and, when his relatives went from home, he bought tickets of that kind for them.

He left Memphis in June, 1894, to go to St. Louis, holding at the time two annual accident policies for $10,000 each, namely, the one here in suit, issued by the Travelers' Insurance Company, and the other issued by the Fidelity & Casualty Company. Before leaving home, he increased his accident insurance by buying $18,000 of tickets that were good for a few days only, and left them in a package addressed to W. M. Randolph, his attorney, with a writing appointing the latter as his executor, without bond or report, and directing the disposition of the above sum. This package was found, after his death, in the safe of the Hill Shoe Company, of which he was assignee.

It does not appear what particular object Mitchell had in going to St. Louis, nor what he did while in that city. He remained there about five months. While there, he bought the accident insurance tickets in suit. One of the persons who sold him the tickets testified that he did not know that Mitchell would have bought so much insurance if he (the insurance agent) had not forced it upon him. Before leaving St. Louis he placed his insurance policies in an envelope addressed to W. M. Randolph, his attorney at Memphis, and sent the package by express. He also telegraphed to W. M. Randolph & Sons from St. Louis: "Leave to-night on Chesapeake & Ohio. Will be at your office to-morrow at 9."

He left St. Louis for his home on the evening of the 8th of November, 1894, and was due at Memphis at 7:55 the next morning. The train on which he traveled was composed of a sleeping car, two ordinary passenger cars, and a baggage car. He occupied a seat in the sleeping car. He arose quite early on the morning of the 9th, and was seen several times standing on the platform of the cars, while the train was moving 15 to 25 miles an hour. At one time he stood with both feet on the platform, and with his back against the side of the door of the car. At another time, according to some of the evidence, he held onto the railing, with one foot on the platform, and the other on the top step of the platform.

The colored porter of the sleeping car was examined as a witness for the defendants. He testified that he first saw Mitchell, the morning of the 9th, standing on the platform of one of the coaches, when the train was about 25 miles from Memphis; that he heard the deceased ask the conductor several times how far it was to Memphis; and that, when he came out to wipe off the hand rails of the car, Mitchell and a little boy were on the plat-

Digitized by Google

form together, Mitchell standing on the lower step, and the boy just going into the door of the ladies' coach. The witness said that Mitchell, when last seen by him, was on the lower step, holding with one hand to the rail attached to the body of the car, and with the other to the platform railing, "one foot up like a man going to jump off, and the other foot on the lower step,"—"standing like a railroad man who was going to jump off." He also testified that in about "a minute or a half minute, a short time," he observed that Mitchell "let all hold go, and fell back; released his hold, and went back"; that he rushed to the front of the car, to find the conductor, and report what had occurred; that the train was immediately stopped, and was backed, until it came to the place where Mitchell was lying across a side track; that the body was at once put into a baggage car, and Mitchell died in a few minutes thereafter, just before the train reached Memphis.

The little boy who was seen by the porter on the platform with Mitchell was 13 years old at the time. In his deposition he stated that he went into the car to warm his hands, and "came back to the door, and he [Mitchell] was not there"; that he went back to the stove, and in a few minutes the porter came running in, and said something about a man falling off.

It is proper here to observe that the sleeping-car porter was the only witness who testified that Mitchell, while on the platform, and just before he disappeared from the train, was in the attitude of a person about to jump from the moving car. The jury might well have concluded, from his examination as a witness, that he was mistaken upon that point, and that there was nothing in Mitchell's conduct indicating a purpose to put his life in peril by jumping or throwing himself from the train. But there was no room to doubt that Mitchell was riding on the platform while the train was moving at the rate of from 15 to 30 miles an hour.

At the close of the evidence, the defendant moved the court for a peremptory instruction in its behalf, assigning as the ground of the motion that Mitchell "voluntarily exposed himself to unnecessary danger, and that his injury and consequent death resulted therefrom." This motion was overruled, and an exception was taken by the defendant.

The first proposition by the plaintiff is that the evidence in his behalf made a case which, in the absence of all other testimony, entitled him to a verdict, and as the defendant elected to introduce testimony in its own behalf, the court was without authority, at the close of the evidence on both sides, to direct a verdict for the defendant.

The authorities cited do not sustain this proposition. It is well settled that if, at the close of the plaintiff's evidence, the court refuses to give a peremptory instruction for the defendant, such refusal cannot be assigned for error if the defendant does not stand upon the case made by the plaintiff, but introduces evidence in support of his defense. Railway Co. v. Cummings, 106 U. S. 700, 1 Sup. Ct. 493; Insurance Co. v. Crandal, 120 U. S. 527, 530, 7 Sup. Ct. 685; Railroad Co. v. Hawthorne, 144 U. S. 202, 206,

Digitized by Google

12 Sup. Ct. 591; Campbell v. City of Haverhill, 155 U. S. 610, 612, 15 Sup. Ct. 217; Railway Co. v. Callaghan, 161 U. S. 91, 95, 16 Sup. Ct. 493. But the failure of a defendant, at the close of the plaintiff's evidence, to ask a peremptory instruction, will not, of itself, preclude such a motion at the close of the whole evidence. It often occurs that the evidence on behalf of a defendant, in connection with that on behalf of the plaintiff, will justify a peremptory instruction to find for the defendant, when such an instruction would not have been authorized by the prima facie case made by the plaintiff's proofs.

The circumstances under which a court may withdraw a case from the jury have been elaborately discussed by counsel. The rule upon that subject has been defined in recent adjudications. The thought intended to be expressed in them is that the jury should be permitted to return a verdict according to its own view of the facts, unless upon a survey of the whole evidence, and giving effect to every inference to be fairly or reasonably drawn from it, the case is palpably for the party asking a peremptory instruction. A mere scintilla of evidence in favor of one party does not entitle him, of right, to go to the jury. Improvement Co. v. Munson, 14 Wall. 442, 448. On the other hand, a case cannot properly be withdrawn from the consideration of the jury simply because, in the judgment of the court, there is a preponderance of evidence in favor of the party asking a peremptory instruction. If the facts are entirely undisputed or uncontradicted, or if, upon any issue dependent upon facts, there is no evidence whatever in favor of one party, or, what is the same thing, if the evidence is so slight as to justify the court in regarding the proof as substantially all one way, then the court may direct a verdict according to its view of the law arising upon such a case. If a verdict is rendered contrary to the evidence, the remedy of the losing party is a motion for a new trial. In disposing of that motion, the court, in the exercise of a sound legal discretion, may interpose and prevent the injustice that may be done by such a verdict. While the court may instruct the jury as to the law arising upon a given or hypothetical state of facts, it is for the jury, if the facts are disputed, or if there is substantial evidence both ways, even if there be a preponderance of evidence one way, to say what facts are established. And this is what was meant by the observation in some cases that the court should not withdraw from the jury a case depending upon the effect or weight of testimony, unless the evidence should be of such conclusive character as to compel the court to set aside a verdict returned in opposition to it. Insurance Co. v. Doster, 106 U. S. 30, 32, 1 Sup. Ct. 18. The court may be of opinion that, according to the weight of the testimony, a verdict should be returned for the party asking a peremptory instruction. But it may not, for that reason alone, give such an instruction. It may not take the case from the jury, on issues of fact, unless the evidence is so distinctly all one way that a different view of it would shock the judicial mind. Hence it has been held in an action for damages against a railroad company—one of the issues being the con-

Digitized by Google

tributory negligence of the plaintiff—that the court erred in not submitting the question of contributory negligence to the jury, where the conclusion did not follow, as matter of law, that no recovery could be had upon any view that could be properly taken of the facts. Kane v. Railway Co., 128 U. S. 91, 9 Sup. Ct. 16; Jones v. Railroad Co., 128 U. S. 443, 9 Sup. Ct. 118. To the same effect are Railway Co. v. Ives, 144 U. S. 408, 417, 12 Sup. Ct. 679; Railroad Co. v. Powers, 149 U. S. 43, 13 Sup. Ct. 748; Gardner v. Railroad Co., 150 U. S. 349, 361, 14 Sup. Ct. 140; Railroad Co. v. Everett, 152 U. S. 107, 113, 14 Sup. Ct. 474.

The general question was considered in the recent case of Sparf v. U. S., 156 U. S. 51, 99, 15 Sup. Ct. 273. Referring to the rule defining the respective functions of court and jury in a case where there is some substantial evidence to support the particular right asserted, and in a case in which there is an entire absence of evidence to establish such right, the court said:

"In the former class of cases the court may not, without impairing the constitutional right of trial by jury, do what, in the latter cases, it may often do without intrenching upon the constitutional functions of the jury. The law makes it the duty of the jury to return a verdict according to the evidence in the particular case before them. But, if there are no facts in evidence bearing upon the issue to be determined, it is the duty of the court, especially when so requested, to instruct them as to the law arising out of that state of the case. So, if there be some evidence bearing upon a particular issue in a cause, but it is so meager as not, in law, to justify a verdict in favor of the party producing it, the court is in the line of duty when it so declares to the jury. Pleasants v. Fant, 22 Wall. 116, 121; Montclair v. Dana, 107 U. S. 162, 2 Sup. Ct. 403; Randall v. Railroad Co., 109 U. S. 478, 482, 3 Sup. Ct. 332; Schofield v. Railway Co., 114 U. S. 615, 619, 5 Sup. Ct. 1125; Marshall v. Hubbard, 117 U. S. 415, 419, 6 Sup. Ct. 806; Meehan v. Valentine, 145 U. S. 611, 625, 12 Sup. Ct. 972."

See, also, Gunther v. Insurance Co., 134 U. S. 110, 116, 10 Sup. Ct. 448.

Our re-examination of this question has been in deference to the arguments of learned counsel. It should be observed, however, that the subject was very carefully considered by this court in Railway Co. v. Lowery, 20 C. C. A. 596, 74 Fed. 463. Upon a full review of the American and English authorities, this court, speaking by Judge Lurton, announced these propositions: That there must be something more than a scintilla of evidence supporting the case of the party upon whom the burden of proof rests, to require the submission of the case to the jury; that where there is a real conflict of evidence on a question of fact, whatever may be the opinion of the judge who tries the case as to the value of that evidence, he must leave the consideration of it for the decision of the jury; that where there are material and substantial facts which, if credited by the jury, would in law justify a verdict in favor of one party, it is not error for the trial judge to refuse a peremptory instruction to the jury; that it is not a "proper standard to settle for a peremptory instruction that the court, after weighing the evidence in the case, would, upon motion for a new trial, set aside the verdict," and that the court "may, and often should, set aside a verdict, when clearly against the weight of the evidence, where it would not be justified in directing a verdict";

Digitized by Google

that, upon reason and authority, "there is a difference between the legal discretion of the court to set aside a verdict as against the weight of evidence, and that obligation which the court has to withdraw a case from the jury, or direct a verdict for insufficiency of evidence"; and that "in the latter case it must be so insufficient in fact as to be insufficient in law."

Guided by the rules laid down in the adjudged cases, we proceed to inquire whether the circuit court should have sustained the defendant's motion for a peremptory instruction to find in its favor. The court was undoubtedly entitled to assume that Mitchell left his seat in the car, and rode many miles on the platform while the train was running at considerable speed. The evidence to that effect was entirely uncontradicted. The only doubt that could arise in reference to the facts was whether, as stated by the colored porter, the assured stood on the lower step of the platform, and jumped or threw himself from the train. If the case depended upon the accuracy of this statement, the court, in view of all the evidence, could not properly have directed a verdict for the defendant without usurping the functions of the jury, and without infringing the constitutional right of the plaintiff to a trial of his case by a jury. The porter's statement that Mitchell jumped from the steps of the platform bore directly on the issue as to suicide. That question was fairly submitted to the jury, and their verdict was, in legal effect, a finding that he did not commit suicide; and we may here observe that the averment in one of the pleas that Mitchell was intoxicated was entirely unsupported by the evidence.

But the defendant's motion for a peremptory instruction distinctly presented the question whether riding upon the platform of a car running 15 to 25 or 30 miles an hour, even if the passenger, while so riding, holds to a railing, and thereby diminishes the danger of being thrown from the car, was, within the meaning of the policy and as matter of law, a voluntary exposure of himself to unnecessary danger. The principal contention of the defendant is that the jury should have been so instructed.

What do the words "voluntary exposure to unnecessary danger" in the contracts in suit import?

In National Bank v. Insurance Co., 95 U. S. 673, 679, it was said that, if a policy of fire insurance was so framed as to leave it doubtful whether the parties intended the exact truth of the applicant's statements to be a condition precedent to a binding contract, the court should lean against a construction that imposes upon the assured the obligations of a warranty. "Its attorneys, officers, or agents," the court observed, "prepared the policy for the purpose, we shall assume, both of protecting the company against fraud, and of securing the just rights of the assured under a valid contract of insurance. It is its language which the court is invited to interpret, and it is both reasonable and just that its own words should be construed most strongly against itself." The same rule was recognized in Thompson v. Insurance Co., 136 U. S. 287, 297, 10 Sup. Ct. 1019, which was a case of fire insurance, and was upheld in Insurance Co. v. McConkey, 127 U. S. 661, 666, 8 Sup. Ct. 1360, as

Digitized by Google

applicable in a case of life insurance. This court enforced the same rule in Indemnity Co. v. Dorgan, 16 U. S. App. 290, 309, 7 C. C. A. 581, and 58 Fed. 945, where this court, speaking by Judge Taft, said that all language in life policies limiting the liability of the company should be construed favorably for the insured; that all doubts or ambiguities should be resolved against the insurer.

The words "voluntary exposure to unnecessary danger," literally interpreted, would embrace every exposure of the assured not actually required by the circumstances of his situation, or enforced by the superior will of others, as well as every danger attending such exposure that might have been avoided by the exercise of care and diligence upon his part. But the same words may be fairly interpreted as referring only to dangers of a real, substantial character, which the insured recognized, but to which he nevertheless purposely and consciously exposed himself, intending at the time to assume all the risks of the situation. The latter interpretation is most favorable to the assured, does no violence to the words used, is consistent with the object of accident insurance contracts, and is therefore the interpretation which the court should adopt. One of the accepted meanings of the word "voluntary" is "done by design or intention; purposed; intended." Webst. Dict. Judge Clark, who presided at the trial, instructed the jury that:

"Mere negligence or inattention is not an exposure to danger within the meaning of the policy,—mere thoughtlessness,—but it requires a degree of appreciation of danger at the time to make it voluntarily assumed, and a voluntary exposure. * * * If you find that standing on the platform, under all circumstances of this case, taking into account his position on the train, the speed of the train, the track, and everything else that makes up the situation where the accident occurred, if you find that that was dangerous, and that, being conscious of that danger, he took a position that exposed him to it, and death resulted, your verdict should be for the defendants, otherwise for the plaintiff, as to that issue."

The company was not entitled to a more favorable interpretation of the contract than this instruction indicated.

This interpretation is in harmony with other clauses of the written contract. For instance, the company insured against "bodily injuries," effected through external, violent, and accidental means, which, independently of all other causes, immediately and wholly disabled the assured from transacting business pertaining to his occupation as a bookkeeper, but expressly excepted "intentional injuries, inflicted by the insured or any other person." A bodily injury, therefore, not intentionally inflicted upon the assured, but which may have been due wholly to negligence or thoughtlessness, was covered by the contract; and it is equally clear that, if death ensued from bodily injuries resulting from such negligence or thoughtlessness, the case would be covered by the contract. But is it to be supposed that the contract included a case of death from bodily injuries inflicted by the accused upon himself carelessly, but not intentionally, and yet that death, resulting from a careless or negligent exposure of the assured to unnecessary danger, with no intention upon his part to commit suicide or to injure himself, was excepted from the operation of the policy? This question must be

Digitized by Google

answered in the negative; and such an answer means that, looking at the whole contract, the words "voluntary exposure to unnecessary danger" are to be held as importing an exposure by the assured to unnecessary danger, with the intention or design at the time to risk the consequences of such exposure.

In Miller v. Insurance Co., 92 Tenn. 167, 187, 21 S. W. 39, which was a suit upon an accident policy, exempting the company from liability where the injury resulted from "voluntary exposure to unnecessary danger," the court held that these words were not "the entire equivalent of 'ordinary negligence,'" and that "a degree of consciousness of danger is necessary before there would be that voluntary exposure to unnecessary danger required to prevent indemnity."

In Keene v. Association, 164 Mass. 170, 41 N. E. 203, which was an action upon a policy of life insurance, exempting the company from liability when death or injury happened in consequence of voluntary exposure to unnecessary danger, hazard, or perilous adventure, the court said:

"A voluntary exposure to necessary danger is not forbidden, nor an involuntary exposure to unnecessary danger. * * * There are other dangers which one need not encounter, if he knows of their existence long enough beforehand, as, for example, a runaway horse or a coming car; and a mere inadvertent and unintentional exposure to a danger of this kind is not voluntary, but involuntary. A voluntary exposure to unnecessary danger implies a conscious intentional exposure,—something of which one is conscious, but willing to take the risk of. By taking a policy of insurance against accidents, one naturally understands that he is to be indemnified against accidents resulting in whole or in part from his own inadvertence. Great negligence will not necessarily defeat a fire policy. Johnson v. Insurance Co., 4 Allen, 388. And in the present policy against accidents, upon the evidence, although the jury might well find a voluntary exposure to danger, we cannot say that it would be bound, as matter of law, to do so."

In Follis v. Association, 62 N. W. 807, 809, the supreme court of Iowa held that "voluntary exposure to unnecessary danger," in a life insurance contract, means something more than contributory negligence, or the want of ordinary care on the part of the assured.

There are, it must be admitted, authorities that look the other way. But we are of opinion that the better reason is with the cases holding that the words "voluntary exposure to unnecessary danger," in accident policies such as the one here in suit, import a consciousness of the danger, and an intention to risk the consequences of exposing one's self to it. Whether, in the present case, the exposure was unnecessary, and whether the assured was aware of and appreciated the danger, and intentionally or purposely risked it, were questions of fact that were properly left for the determination of the jury under appropriate instructions by the court as to the law of the case. In making such determination, the jury were entitled to look at all the evidence, and, as a recognition of the danger and the intention of the assured to take the risk attending the situation may not unreasonably have been inferred from the circumstances and from his acts, the jury were entitled to infer a voluntary exposure to unnecessary danger from any facts showing that he could not have failed to recognize the exist-

Digitized by Google

ence of the danger, and must have purposely or intentionally risked it.

Before leaving this part of the case, it is proper to refer to the action of the circuit court touching certain special requests by the defendant for instructions.

The defendant asked the court to instruct the jury that if they found "that Albert G. Mitchell was an intelligent man, accustomed to railroad traveling, and while in the exercise of his own free will, and without any necessity therefor, was standing upon the platform of the car with his hands in his pockets, or upon the steps of the platform of said car, while in a train propelled by steam, and running at a speed of about twenty-five miles an hour, then this will be a 'voluntary exposure to unnecessary danger,' in the sense of the policies; and, if death resulted from the same, you will find for the defendants." This instruction was properly refused, because it assumed that the conduct of Mitchell, as described in the proposed instruction, was, as matter of law, a voluntary exposure of himself to unnecessary danger.

The defendant also asked the court to instruct the jury that if they found that "Mitchell was an intelligent man, and at the time exercising his own free will, and, without any necessity therefor and with a knowledge of the danger to which he was exposed, was standing upon the platform of the car with his hands in his pockets, or upon the steps of the platform of said car while the train was being propelled by steam at a speed of about twenty-five miles an hour, then this would be a 'voluntary exposure to unnecessary danger'; and, if death resulted from the same, you will find for the defendants." This instruction was given as requested, with the addition of the words "if the jury, under all the circumstances, find that the position was, in fact, dangerous." The modification made by the court of the proposed instruction was entirely proper. It was not for the court to say, as matter of law, that the position of Mitchell when riding on the platform was in fact dangerous. The track of that part of the road over which the train passed while Mitchell stood on the platform was straight and level, and therefore the danger of being thrown from the car by sudden jerks of the train was not so great as it would have been if the road had been curved or uneven. The question as to the extent or character of the danger to which Mitchell exposed himself was a question of fact. At the trial below, the defendant itself placed numerous witnesses upon the stand, and interrogated them as to the danger of riding upon the platform of a rapidly moving railroad train. It sought to establish by evidence that it was a position of great danger. It was eminently proper that such an issue of fact should have been left to the jury.

The defendant requested the following instruction to be given:

"If you find Albert G. Mitchell was an intelligent man, and exercising his own free will, and without any necessity therefor, and with a knowledge of the danger to which he was exposed, but which danger he may not then have realized or been then thinking about, and was standing upon the platform of the car with his hands in his pockets, or was standing upon the steps of the car, running by steam at a speed of about twenty-five miles an hour, then this would be a 'volun-

Digitized by Google

tary exposure to unnecessary danger,' in the sense of the policies; and, if death resulted from the same, you will find for the defendants."

The instruction was properly refused, for the reason, if for no other, that it was so worded as to confuse or mislead the jury. If the assured could have had actual "knowledge" of the danger to which he was exposed, and yet did not think of it or realize it to any extent, then the object of the instruction was to affirm that the intention with which he so exposed himself was immaterial; whereas, as we have said, there could be no voluntary exposure to unnecessary danger, within the meaning of the contract, unless the assured was conscious of the danger, and intended—that is, purposely determined—to risk it. But, independently of this view, the instruction might well have been refused upon the ground that the subject had been fully covered by the general charge of the court.

There is another view of this question which is entitled to great weight. The policy expressly declares that the insurance does not cover "entering or trying to enter or leave a moving conveyance using steam as a motive power, except cable cars." It thus appears that the minds of the parties were directed to the possible conduct of the assured when about to use or when using railroad cars propelled by steam. When, therefore, the insurance company took care to declare that it would not be liable for injuries or death resulting from entering or trying to enter or leave a moving conveyance using steam, it is reasonable to hold that it did not intend to forbid absolutely riding on the platform of a railroad car, but intended to insure against all accidents arising from railroad travel other than those arising from entering or leaving a car when it was in motion, leaving every question as to "voluntary exposure to unnecessary danger" to be determined by the facts of each case. Of course, the officers of the insurance company knew, what every one else knew, that passengers on railroad cars often passed over the platforms of cars from one car to another while the train was moving rapidly, and sometimes stood or rode upon the platforms of rapidly moving cars. If the company intended to exclude liability for injuries or death resulting from voluntary acts of the assured while on a railroad car that exposed him to danger, why did it expressly except only the "entering or trying to enter or leave a moving conveyance using steam," and omit all reference to the more common occurrence of riding upon the platform of such a conveyance? The answer to this question suggests reasons, founded in justice and fair dealing, why the general words "voluntary exposure to unnecessary danger" should not be so enlarged by construction as to embrace, as matter of law, a case of riding upon the platform of a moving railroad car through mere carelessness or heedlessness, and without any purpose or apprehension of being injured or killed.

In Southard v. Assurance Co., 34 Conn. 574, it was said:

"Now, it may be said that this specific exception from the scope of indemnity of death or injury happening from causes and under circumstances expressly set forth leaves, by fair implication, death or injury from all other causes and under

Digitized by Google

all other circumstances included in the contract of indemnity; thus logically inverting or complementing the maxim, 'Expressio unius est exclusio alterius.' "

And in Marx v. Insurance Co., 39 Fed. 321, 322, which was an action upon a policy similar to the one here in suit, the court said:

"As to the condition exempting defendant from liability in case of death from violating a rule of a corporation, it is said that deceased was forbidden to ride on the platform by a rule of the railroad company, which was inscribed on a metal plate on the door of the car. Whether this can be taken to be a rule of a corporation, or what shall be a rule of a railroad corporation within the meaning of the condition, is not very clear. By another condition, some limitations are imposed upon policy holders traveling by rail, as follows: 'Entering or trying to enter or leave a moving conveyance using steam as a motive power; walking or being on a railway bridge or roadbed.' Having thus defined the acts which must be avoided by policy holders in traveling on cars, I doubt very much whether another can be added under the general designation of a 'rule of a corporation.' "

While we do not rest our decision upon the ground last stated, the considerations in support of that ground tend to sustain the general proposition that the voluntary riding upon the platform of a rapidly moving railroad car, although there may be no necessity therefor, is not in itself and as matter of law a voluntary exposure to unnecessary danger, within the meaning of the contract in suit, but presents a question of fact to be determined by the jury under all the evidence before them.

It is proper to add that at the close of the general charge the court was asked by the defendant to instruct "the jury on the subject of voluntary exposure, and especially as to his knowledge of danger, that men are intended or presumed to know that which is open and plain to be seen, and to intend the natural and probable consequences of their own acts." The court replied:

"Well, that is good law. I said to the jury, in another form, that in determining whether he knew the danger, and was, to an extent, conscious of it, that they would look to whether it is one that a man of reasonable care and caution would have seen and appreciated, and from that they may infer that he knew it; on the contrary, as bearing on the same point, that they might look to the fact, if proven as a fact, that men of intelligence and reasonable care and prudence constantly rode in a position of that sort. That is a mere circumstance. It don't prove that the man who rode in the position didn't appreciate that it was dangerous."

Counsel for defendant having observed that there was evidence in the case that the deceased "had his hands in his pockets at the time, and that he also warned a little boy," the court replied:

"Yes, sir; I have said, 'Look to everything in the case,' and I meant the most minute particle of the proof. I didn't go over it all, but I presumed that, when I said they would look over it all, it was their duty to charge their memory, so far as they can, and give it consideration."

Our attention has been called to numerous adjudged cases in which the court has instructed the jury, as matter of law, that certain acts upon the part of a passenger on a railroad car constituted such contributory negligence as precluded a right of recovery against the railroad company. The principles announced in those cases are not, in our opinion, applicable to a contract of life insurance that does not in terms exempt the insurer from liability where the death of the insured is caused by his negligence or want

Digitized by Google

of due care. If an accident insurance company wishes to make it a condition of its liability that the assured shall not be guilty of negligence contributing to his injury or death, it should take care that the contract with the assured expressly so provides. The contract in suit covers the injury or death of the assured from all external, violent, and accidental means, except in the cases specifically declared in the contract not to be covered by its provisions. Bodily injury or death resulting from the carelessness of the assured is not excepted from the contract. This question was satisfactorily disposed of by Judge Clark when overruling the motion for a new trial. After observing that the law, as a matter of public policy, imposes on the carrier of passengers the highest degree of skill and caution reasonably possible for the protection of its passengers, and that, whenever the passenger's negligence contributes to bring about the accident, that is an end of the case, he said:

"On the contrary, in cases between insurer and insured, the relation is one established by contract, and this contract or policy undertakes to insure the policy holder, generally, against death or injury resulting from violent, external, and accidental means, and includes an accident resulting from the ordinary negligence of the insured, as well as that of others. The policy then provides that it shall not extend to nor cover accidents which result under special and exceptional conditions, and among such exceptions is that of an accident resulting from a 'voluntary exposure to unnecessary danger.' The policy protects the assured, then, against all violent and external accidents not embraced within one of these exceptions. The policy does not require, and the assured does not contract for, the exercise of reasonable care and caution, and no such consideration as that enters into the question except remotely and secondarily. The primary and general purpose of the contract is clearly one of insurance against accidents generally; and the question of whether the circumstances of a particular accident bring it within one of these exceptions is not a question whether the assured has exercised reasonable care or caution, nor whether he has been guilty of contributory negligence; but it is a question of whether or not the insurance company has shown (the burden being on it to do so) that the insured voluntarily and unnecessarily exposed himself to danger, and that the accident resulted in consequence thereof. And it is to be borne in mind all along that these exceptions by which the benefits of the contract may be forfeited or lost to the assured are strictly construed against the company, and liberally in favor of the assured. In fact, this principle pervades the entire law of insurance contracts of every kind whatever."

In these views we entirely concur. They are supported by the decision in Insurance Co. v. Martin, 32 Md. 310, 312, which was an action upon an accident policy. The court said:

"Nor is it a good defense that the accident was caused by the mere carelessness or negligence of the assured. In cases where the foundation of the action is an injury occasioned by the negligence of the defendant, and the liability of the latter grows out of such negligence, it is always a good defense to show contributing negligence on the part of the plaintiff; but here the liability is created by a contract, one of the chief objects of which was to protect the assured against his own mere carelessness or negligence. It has long been the universally settled construction of fire policies that they cover a loss where the fire may be caused by the carelessness, negligence, and want of due caution on the part of either the assured himself, or of his servants, agents, or tenants, because one of the principal objects the assured has in view in effecting an insurance is protection against casualties arising from these causes. The same construction, for the same, if not a stronger, reason, must be given to a policy like the present, not only because of the character of the insurance effected, but because its positive language and the terms of the exception show that all accidents resulting from mere careless-

Digitized by Google

ness or negligence are insured against. The observance of due care and diligence on the part of the assured is no element of the contract on his part, and can in no way affect the right of action thereon."

See, also, Wilson v. Association, 53 Minn. 470, 479, 55 N. W. 626; Freeman v. Insurance Co., 144 Mass. 572, 576, 12 N. E. 372; 2 May, Ins. § 530.

It remains to consider the question relating to the clause of the policy exempting the company from liability if the assured was injured or came to his death in consequence of his "violating rules of a corporation." Upon this point the court charged the jury:

"If the company had a rule that the passengers were not permitted to stand on the platform of the car, and that was known to him, it was his duty to obey it; and whether it was known to him or not you may determine by looking to the fact of the extent of his acquaintance with traveling,—how much of that he had done; how frequently,—the fact that the rule was placarded on the doors of the car, if such was the fact, and whether or not it was a rule which a reasonable and prudent man would probably know. To constitute it a rule such as he is bound by, it must have been a rule which the company itself enforced, or used a reasonable effort to enforce, and it required that to keep it in force as a rule; and if the company habitually violated, or permitted it, without any effort to prevent it, to be habitually violated by passengers, then it would not be a rule which he was bound to obey. If it was known to him, and was a rule which was enforced, or a reasonable effort was made to keep it enforced, it was his duty to obey it; and, if he failed to do so, it would defeat his recovery."

The defendant excepted to this portion of the charge, upon the ground that all the evidence in the case tended to show that the railroad company had a rule forbidding passengers from riding on the platform of its cars while trains were in motion, and that the company and its agents attempted in good faith to enforce the same, and did not voluntarily permit said rule to be violated or nullified.

We think the specific objections made to the charge were met by what the court said to the jury. The objections conceded that the assured was not bound to obey any rule of the railroad company which the latter did not itself recognize as binding, and in good faith attempt to enforce. That question was fairly submitted to the jury. The court assumed, and rightly, that the assured was not to be charged with violating any rule of the company of which he had no knowledge. To this part of the charge no exception was or properly could have been taken. Whether the assured had such knowledge of any rule of the railroad company forbidding passengers to ride on the platforms of cars was left to the jury to determine upon the evidence. That was a proper disposition of the question. It was well said in Marx v. Insurance Co., 39 Fed. 321, 322:

"If, however, it shall be conceded that the railroad company had at some time prior to the death of Marx adopted a rule forbidding passengers to ride on the platform of a car, and that such rule was within the general condition of the policy referring to rules of a corporation, it was not then in force. The testimony of the trainmen was to the effect that it was not at all observed. All passengers on the road who were so inclined, and often by the invitation of the trainmen, rode on the platforms of the cars as freely and as commonly as elsewhere. Under such circumstances it cannot be said that there was any rule of the railroad company as to riding on the platform. The cases cited to show that the consent of a con

Digitized by Google

ductor of a train or others in authority shall not be effectual to set aside such a rule, in so far as it may affect the liability of the railroad company for any injuries received while in that position, are not controlling. An insurance company offering indemnity for injury or death in case of accident, as to its policy holders, is not at all in the position of a carrier for hire as to its passengers. The latter is engaged in a special service of peculiar danger, as to which some rules of conduct on the part of its patrons are highly necessary. The former assumes a guardianship of its patrons in respect to the casualties of life which beset men everywhere, and as to which it is not practicable to impose limitations which shall be constantly borne in mind by the insured. Will any one say that on sea and land, at home and abroad, a policy holder must constantly consider whether he is within all the rules of all the corporations, public and private, which he may in any way encounter? Whatever the answer may be to any such question, it is plain enough that a rule of a corporation, within the meaning of this policy, must be one which is known to the policy holder, and of force at the time of the alleged violation. The evidence at the trial did not establish this fact, and the policy cannot be avoided on the ground that the deceased was not observing its terms at the time of the accident."

See, also, Railway Co. v. Lowell, 151 U. S. 209, 218, 14 Sup. Ct. 281.

We perceive no error of law in the record, and the judgment of the circuit court is therefore affirmed.

(78 Fed. 924.)

FIDELITY & CASUALTY CO. v. RANDOLPH. STANDARD L. & ACC. INS. CO. v. SAME. PREFERRED ACC. INS. CO. v. SAME. UNION C. & S. CO. v. SAME.

(Circuit Court of Appeals, Sixth Circuit. February 2, 1897.)

Nos. 440–443.

ACCIDENT INSURANCE—VOLUNTARY EXPOSURE—NEGLIGENCE.

In Error to the Circuit Court of the United States for the Western District of Tennessee.

J. K. Flippin and Luke E. Wright, for plaintiffs in error.

Geo. Randolph, Samuel Holloway, and Wm. M. Randolph, for defendant in error.

Before HARLAN, Circuit Justice, LURTON, Circuit Judge, and SAGE, District Judge.

HARLAN, Circuit Justice. There were separate actions upon accident insurance contracts. They were tried with the case of Insurance Co. v. Randolph (just decided) 24 C. C. A. 305, 78 Fed. 754. The evidence in these cases was the same as in that case.

The Fidelity & Casualty Company by its contracts insured against "bodily injuries sustained through external, violent, and accidental means," and against death resulting within 90 days from such injuries independently of all other causes. But the contract did not cover (among other excepted cases) "voluntary exposure to unnecessary danger"; and "in case of injuries, fatal or otherwise, wantonly inflicted upon himself by the accused," the measure of the company's liability was a sum equal to the premium paid.

The Standard Life & Accident Insurance Company by its contracts insured against "immediate, continuous, and total disability or death resulting from bodily injuries" caused "solely by external, violent, and accidental means." But its contracts did not cover (among other excepted cases) "intentional injury (inflicted by the insured or any other person), voluntary overexertion,

Digitized by Google

wrestling, lifting, racing, voluntary and unnecessary exposure to danger, entering or trying to enter or leave a moving conveyance using steam as a motor (cable cars excepted), riding in or on any conveyance not provided for the transportation of passengers, or walking or being on the roadbed or bridge of any railway."

The Preferred Accident Insurance Company by its contracts insured against "immediate, continuous, and total disability or death resulting from bodily injuries," effected during the term of the insurance, "through external, violent, and accidental means." But those contracts did not cover (among other excepted cases) "intentional injury (inflicted by the insured or any other person), nor voluntary and unnecessary exposure to danger, nor wrestling, or fighting, or racing or competitive games, nor entering or leaving, or attempting to enter or leave, a moving conveyance using steam, cable, or electricity as a motor (except street cars), nor travel on any conveyance not provided for transporting passengers"; the extent of the liability for "injuries, fatal or otherwise, purposely inflicted upon the insured by himself," to be the sum paid for the insurance ticket.

The Union Casualty & Surety Company by its contracts insured against bodily injuries happening to the assured, as well as death, caused solely by external, violent, and accidental means. But the contracts did not cover (among other excepted cases) "injuries intentionally inflicted on the assured by himself or by any other person, not being an unprovoked assault," nor "voluntary exposure to avoidable danger, except where incurred in an attempt to save human life," nor "any violation of law or municipal ordinance or of the rules of any corporation, entering or trying to enter or leave a moving conveyance (other than street cars) using steam or electricity as a motive power," nor "riding in or upon a conveyance not provided for the transportation of passengers, or walking or being on the roadbed or bridge of any railway."

The defense in each of these cases was substantially the same as in the case against the Travelers' Insurance Company.

The words, "voluntary and unnecessary exposure to danger," in the contracts with the Standard Life & Accident Insurance Company and the Preferred Accident Insurance Company, and the words, "voluntary exposure to avoidable danger," in the contract with the Union Casualty & Surety Company, mean the same as the words, "voluntary exposure to unnecessary danger," in the contracts with the Travelers' Insurance Company and Fidelity & Casualty Company.

For the reasons stated in the opinion in Insurance Co. v. Randolph (just decided), the judgment in each of these cases is affirmed.

(78 Fed. 576.)

FELTON v. SPIRO.

(Circuit Court of Appeals, Sixth Circuit. February 2, 1897.)

No. 452.

1. DAMAGES FOR WRONGFUL DEATH—NUMBER OF BENEFICIARIES.

When the statute giving a right of action for damages for negligence causing death provides that the damages recovered shall inure to the benefit of the family of the deceased, it is competent to prove, upon the trial of such an action, the number of children left by such deceased.

2. SAME—WIDOW AND CHILDREN.

The amendment of 1871 to sections 2291 and 2292 of the Code of Tennessee, relating to the recovery of damages for acts or neglects causing death, was intended to affect the procedure, and not the beneficiaries of the statute; and since such amendment, as before, damages recovered in such actions inure to the benefit of the widow and children of the deceased, and not to the widow alone.

3. NEW TRIAL—REFUSAL TO GRANT.

When a trial court, upon a motion for a new trial, refuses to consider a ground urged therefor, or to exercise its discretion, for the reason that it

Digitized by Google

considers it has no power to do so, such refusal may be assigned as error. Mattox v. U. S., 13 Sup. Ct. 50, 146 U. S. 140, followed.

4. VERDICT—SETTING ASIDE.

A federal court, in which a jury has rendered a verdict, has power to set aside such verdict when, in its opinion, it is contrary to the decided or overwhelming weight of the evidence, and, in the exercise of a legal discretion, may properly do so, though the case is not one in which it would have been proper to direct a verdict. Railway Co. v. Lowery, 20 C. C. A. 596, 74 Fed. 463, followed.

5. APPEAL—JUDGMENT OF REVERSAL.

A judgment of reversal based solely on the ground that the trial court erred in not exercising its discretion on a motion for new trial requires, not the ordering of a new trial, but only a remanding of the case, for further proceedings from the point where the error was committed. In this case the direction to the trial court should be to consider and decide the motion for new trial.

In Error to the Circuit Court of the United States for the Eastern District of Tennessee.

Chas. R. Head and Edw. Colston, for plaintiff in error.
H. H. Ingersoll, for defendant in error.

Before TAFT and LURTON, Circuit Judges, and SAGE, District Judge.

TAFT, Circuit Judge. This action was brought by Fannie Spiro, as the widow of Herman Spiro, deceased, to recover damages for the death of her husband, caused, as she alleged, by the negligence of the servants of the defendant, Samuel Felton, receiver of the court below, engaged, under the order of the court, in the operation of the railway of the Cincinnati, New Orleans & Texas Pacific Railway. The deceased, Herman Spiro, was a passenger on a local freight train of the defendant. As he was about to alight from the train at a small station in Tennessee, he was jerked or thrown violently from the back platform of the caboose to the ground, and so injured that he died very soon after. The negligence charged consisted in the sudden movement of the engine at a time when passengers were invited to alight. The contention of the defendant was, and he called a great many witnesses to sustain it, that the train had been standing still for five or ten minutes, affording the deceased ample time to leave the train in safety; that he negligently remained on board until the end of this time, and then, when the train began to back up, and while it was in motion, he rushed to the platform, and, in attempting to leave the moving car, he fell, and was injured. It may be remarked that the great weight of evidence supported the view that the accident was solely the result of the negligence of the deceased—first, in not leaving the car when invited to do so; and, second, in attempting to leave it when the freight train was in motion. Upon a first trial the jury disagreed. Upon a second trial, which is the one now under review, there was a verdict for the plaintiff of $6,000. There are several assignments of error based on the rulings of the court at the trial.

First, the court permitted the plaintiff, over the objection of the defendant, to prove the number of children the deceased left. In Pennsylvania Co. v. Roy, 102 U. S. 451, 460, where a plaintiff was

Digitized by Google

suing a railroad company for a personal injury to himself, the supreme court held that evidence of the size of the family dependent on the plaintiff was not relevant to the issue, and was calculated to arouse undue sympathy in the minds of the jury, and to enhance the damages beyond a just sum. But, in Railroad Co. v. Mackey, 157 U. S. 75, 15 Sup. Ct. 491, where the action was by the administrator of one to recover damages for the death of his intestate caused by defendant's negligence, and the statute giving the right of action provided that the damages recovered should inure to the benefit of the family of the deceased, the same court held that it was entirely proper for the jury, in estimating the loss suffered by those in whose behalf the suit was brought, to take into consideration the number and ages of the children. If, therefore, under the statute of Tennessee, the action by the widow is for the benefit of herself and her children, the evidence objected to was rightly admitted.

By the Code of 1858 of Tennessee (sections 2291–2293) it was provided as follows:

"2291. The right of action which a person who dies from injuries received from another or whose death is caused by the wrongful act or omission of another, would have had against the wrongdoer, in case death had not ensued, shall not abate or be extinguished by his death; but shall pass to his personal representative, for the benefit of his widow and next of kin, free from the claims of his creditors.

"2292. The action may be instituted by the personal representative of the deceased; but if he decline it, the widow and children of the deceased may, without the consent of the representative use his name in bringing and prosecuting the suit on giving bond and security for costs, or in the form prescribed for paupers. The personal representative shall not, in such case, be responsible for costs, unless he sign his name to the prosecution bond.

"2293. If the deceased had commenced an action before his death, it shall proceed without a revivor. The damages shall go to the widow and next of kin free from the claims of the creditors of the deceased, to be distributed as personal property."

The distribution of personal property, under the Tennessee law, when there are a widow and children, is "to the widow and children equally, the widow taking a child's part." Code 1858, §§ 2429–2431. There is no doubt or dispute that, under unamended sections 2291 and 2292, the suit brought would be for the benefit of the widow and children, but the suit would have to be brought in the name of the personal representative, with or without his consent. In 1871, the first two sections above quoted were amended by an act which is still in force, and which provides:

"That section 2291 of the Code of Tennessee be so amended as to provide that the right of action which a person, who dies from injuries received from another, or whose death is caused by the wrongful act, omission, or killing by another, would have had against the wrongdoer in case death had not ensued, shall not abate or be extinguished by his death, but shall pass to his widow, and in case there is no widow, to his children, or to his personal representative, for the benefit of his widow or next of kin, free from the claims of his creditors.

"Sec. 2. Be it further enacted, that section 2292 be so amended as to allow the widow, or if there be no widow, the children, to prosecute suit, and that this remedy is provided in addition to that now allowed by law in the class of cases provided for by said section and section 2291 of the Code, which this act is intended to amend."

The contention of the counsel for the defendant receiver is that the act of 1871 made the suit in the name of the widow for her own bene-

Digitized by Google

fit alone, and that the children of the deceased husband would have no legal interest in her recovery. The argument rests on the substitution in the amendment of the disjunctive "or" for the conjunctive "and," as it occurs in unamended section 2291, in the phrase "for the benefit of the widow and next of kin." If this construction is correct, then we have the anomalous result that, where a suit is begun before the death of the injured person, the avails of the suit recovered after his death pass, by virtue of section 2293, which was not amended by the act of 1871, to the widow and children, but that when the suit is brought after the death, then the recovery is for the benefit of the widow, and not of the children. Certainly this result is to be avoided if possible without straining the language used. It is perfectly manifest that the whole object of the amendment was to remove the necessity for bringing the action in the name of the representative, and to give to the widow, or, in case there was no widow, the children, the right to bring the action without using the name of the representative. It was intended to affect the procedure and not the beneficiaries. This is made manifest by the fact that section 2293 was not amended. As the suit was by that section to proceed in the dead plaintiff's name without revivor, there was no need of using the name of the representative of the deceased, and hence no need of an amendment permitting the use of the widow's name instead of that of the representative. The clause of the amending act in which the disjunctive "or" is substituted for "and" of the old act is an awkward one. The intended meaning could only be certainly conveyed by separating the various cases intended to be covered and stating each by itself. The "or" was probably used in view of the possibility that there might be no widow, in which case the avails of the suit would of course go only to the next of kin; but the contingency in which there might be a widow and children was lost sight of. All the circumstances taken together lead to the conclusion that the change of "and" to "or" was not to effect a change in meaning as to the beneficiaries, but arose from mere carelessness in the use of language. It is not uncommon, in order to carry out the obvious intent of the legislature, for courts to construe "or" as meaning "and." Massie v. Jordan, 1 Lea, 647; Union Ins. Co. v. U. S., 6 Wall. 759, 764.

Though the exact point here presented has never been in judgment before the supreme court of Tennessee, that court has frequently expressed the view that, where the widow sues in such a cause, she sues as trustee for herself and her children. Greenlee v. Railway Co., 5 Lea, 419; Webb v. Railway Co., 88 Tenn. 128, 12 S. W. 428; Loague v. Railroad, 91 Tenn. 461, 19 S. W. 430; Railroad Co. v. Acuff, 92 Tenn. 29, 20 S. W. 348; Holder v. Railroad Co., 92 Tenn. 146, 20 S. W. 537. In Railroad Co. v. Bean, 94 Tenn. 394, 29 S. W. 370, cited by counsel for the receiver, it was held that, where the right of action had once vested in the widow, the cause of action did not pass on her death to her representative, but was extinguished. But in that case there were no children, so that the court was not required to decide, and did not in fact decide, that the widow is the only beneficiary where there are children. We find no error in the

Digitized by Google

action of the court in allowing evidence as to the number and ages of the real parties in interest in the suit.

The next assignment is based on the admission by the court of the statement of a photographer as to the condition of the track, at the point near where the accident occurred, some 23 months after the accident. Without objection, a photograph of the locus in quo, taken 23 months after the accident, was admitted. We cannot see how the photographer's statement prejudiced defendant. The condition of the track had but the remotest relation to the accident, and, the photograph which showed the track having been admitted without objection, it was certainly not reversible error to allow an oral description of the same thing.

It is also assigned for error that the court below permitted evidence by a witness that he had seen chains stretched across the open space in the railing on the platform of other cabooses, as tending to show that defendant's failure to have a chain on this caboose was want of due care. Whether this was error or not, we think it was cured by the court in its charge, which, in effect, instructed the jury that the defendant was under no obligation to have the chain stretched across this space, and that a failure to have the chain could be no ground for recovery. There is some reason for doubt as to whether this was a mere expression of opinion on the facts, or an instruction as matter of law; but we think that, taking all the language together, it may be properly construed as the latter, and that the error, if any, in admitting the evidence was thus cured.

The next, last, and chief assignment of error is based on the action of the trial court in refusing to exercise his discretion in respect of the motion of the defendant to set aside the verdict because contrary to weight of the evidence. The language and ruling of the court in passing upon the motion for a new trial is incorporated in the bill of exceptions. The court said (73 Fed. 91):

"I do not think, on the proof in this case, the court could properly have withdrawn the case from the jury by positive direction; and this brings us to the last objection taken, which is that the verdict is against the weight of the evidence. This is a question which has given this court great trouble, not only in this but other cases, and I shall be very glad indeed when the circuit court of appeals for this circuit shall have occasion to pass judgment upon this question, so that this court may have an authoritative general rule, at least, in the determination of this question. I wish to say, in the outset, that I think the decided weight of the evidence, both as to quantity and quality, shows that the deceased came to his death as the result of his own negligence, in not getting up and going out of the train when it stopped at his point of destination, and that he had ample time to have done so if he had used reasonable care and diligence on his own part. I think the proof shows, by the same decided weight, that the accident to him is due to the fact that he remained in the caboose, engaged in conversation, until after ample time to have left the car; the train was started in a backward motion in its regular operations; and that the deceased was thrown therefrom by reason of being on the rear platform while the train was in such motion, and, most likely, when it stopped moving backward, and let out the slack, or when it started south a second time. But, although the court takes this view of the evidence, the court does not feel that it can lawfully set aside the verdict on that ground alone. I desire not to be misunderstood about this proposition. The question here is one of the weight of the evidence. It is not a question of there being no evidence to support the verdict, misconduct on the part of the jury, error in the charge of the court or in the admission or rejection

Digitized by Google

of evidence, or of the many other grounds on which a new trial may be granted. But the question is, when no other valid ground of rejection to the verdict exists, can the court set aside the verdict alone upon the ground that it is against the weight of the evidence, however decided the preponderance may be? It is to be remembered that the practice in the courts of the United States is different from that of the state court. In this court, when the undisputed evidence is so conclusive that the court would be compelled to set aside a verdict returned in opposition to it, the court may withdraw the case from the jury and direct a verdict. The terms in which this rule is stated differ somewhat in different cases, although the underlying principle remains the same. Examples of this difference in the form of statement of this rule may be seen by comparing Railway Co. v. Ives, 144 U. S. 408, 12 Sup. Ct. 679, reaffirmed in Railroad Co. v. Griffith, 159 U. S. 611, 16 Sup. Ct. 105, with Elliott v. Railway Co., 150 U. S. 245, 14 Sup. Ct. 85, and Southern Pac. Co. v. Pool, 160 U. S. 438, 16 Sup. Ct. 338. If, then, the evidence is such that a verdict returned in opposition to it would be set aside by the court, it is the duty of the court in the first instance to direct a verdict. It seems to follow, logically and necessarily, that if the evidence is not so conclusive that the court can thus withdraw the case from the jury, and is compelled to submit the case to the jury, the court is then not at liberty to set the verdict aside as against the weight of evidence. It seems to me that the right to do so is inconsistent with the right and duty to give a positive direction for the same reason before the verdict. It occurs to me that in any case it would be idle to say that the court must submit the case to the jury because it may not lawfully direct a verdict, and that, having submitted the case to the jury, it then can effect the same results practically as by direction in setting it aside as opposed to the evidence. * * * What has been said with reference to the cases just cited sufficiently indicates my view of the want of power in this court to set aside a verdict because against the weight of evidence, however decided that weight may be. There have been two trials in this case. On the first trial I would have withdrawn the case from the jury on the ground of contributory negligence on the part of the deceased, except for the testimony of the witness Riseden. On the second trial both sides of the case had been strengthened,—that of plaintiff slightly, and that of defendant decidedly. Nevertheless, I felt that, in view of the testimony of the same witness, Riseden, with some slight corroboration, I could not rightly direct a verdict, notwithstanding the great weight of the evidence introduced by defendant, and, unless I should give such direction, it is not likely that the result of this case will ever be different from what it is; and it is certain that the verdict is a very moderate one, if the plaintiff is entitled to recover at all. I have been thus particular to state the view I take of my right and duty upon this motion, and of the rule under which I am acting; for, while my action in granting or refusing the new trial is not the subject of review, if I refuse to exercise the discretion to grant a new trial under an erroneous view of law and of my duty in the matter, this, I think, is an error which is the subject of review. Mattox v. U. S., 146 U. S. 140, 13 Sup. Ct. 50. It is only when the court, in the exercise of its discretion to grant or refuse a new trial, does so upon all competent evidence, and under a correct view of the law, that its judgment is not the subject of review, and when, instead of leaving it to be presumed that the court below acted under a correct conception of the law, that court distinctly states on record the view of the law by which the court was controlled, no reason is perceived why this is not subject to review on writ of error. For reasons indicated, the motion for a new trial is denied."

The perusal of this opinion leaves no doubt in our minds that the learned judge intended to refuse, and did refuse, to consider or act upon the motion for a new trial, in so far as it was based on the ground that the verdict was against the weight of the evidence, because he was of opinion that the court had no power to set aside a verdict on such a ground. It is contended that the remark of the court, in the course of his opinion, that the result of the case would be likely to be the same in another trial, shows that he was passing on the motion, and denying it on its merits. But, taking the

Digitized by Google

whole opinion together, we must accept the positive statement of the learned judge himself, in his opinion, as to the meaning of his action, rather than the construction of counsel. Again, it is said that the motion for new trial was not filed in time. It was filed during the term at which the verdict was rendered. This is sufficient, under the federal practice authorized by section 726, Rev. St., Fost. Fed. Prac. § 376. Section 987, Rev. St., relied on, relates only to method of staying execution pending new trial, and does not limit the time in which motions for new trial may be otherwise filed. Rutherford v. Insurance Co., 1 Fed. 456.

A motion for a new trial is, of course, addressed to the discretion of the court, and, if the court exercises its discretion, and either grants or denies the motion, its action is not the subject of review. This is so well settled that it is unnecessary to cite authorities upon the point. But the motion for new trial is a remedy accorded to a party litigant for the correction by the trial court of injustice done by the verdict of a jury. It is one of the most important rights which a party to a jury trial has. It is a right to invoke the discretion of the court to decide whether the injustice of the verdict is such that he ought to have an opportunity to take the case before another jury. If, now, in exercising this discretion, it is the duty of the court to consider whether the verdict was against the great weight of the evidence, and he refuses to consider the evidence in this light on the ground that he has no power or discretion to do so, it is clear to us that he is depriving the party making the motion of a substantial right, and that this may be corrected by writ of error. In Mattox v. U. S., 146 U. S. 140, 13 Sup. Ct. 50, it was held that, where the trial court excluded affidavits offered in support of a motion for a new trial, and in passing upon the motion exercised no discretion in respect of the matters stated in the affidavits, the question of the admissibility of the affidavits was preserved for the consideration of the supreme court on writ of error, notwithstanding the general rule that the allowance or refusal of a new trial rests in the sound discretion of the trial court. This furnishes direct support for the view that the refusal of the trial court to consider at all as a ground for new trial that the verdict was contrary to the evidence may be assigned for error here.

We come, then, to the question whether a federal court, in which a jury has rendered a verdict, has the power to set aside a verdict when, in its opinion, it is contrary to the decided or overwhelming weight of the evidence, and in the exercise of a legal discretion may properly do so. Upon this point we have not the slightest doubt. This court, in Railway Co. v. Lowery, 20 C. C. A. 596, 74 Fed. 463, has already decided it. In an elaborate and most carefully considered opinion, Judge Lurton, speaking for the court, points out the distinction between that insufficiency in law of evidence to support an issue which will justify a peremptory instruction by the court, and that insufficiency in fact of evidence, when weighed with opposing evidence, which, while not permitting a peremptory instruction, will justify a court in setting aside a verdict based on it, and in sending the parties to another trial before another jury. The cases

Digitized by Google

in England and in this country are reviewed at length by Judge Lurton, and the conclusion reached is fully supported by authority. The result is thus summed up (page 609, 20 C. C. A., and page 477, 74 Fed.):

"We do not think, therefore, that it is a proper test of whether the court should direct a verdict, that the court, on weighing the evidence, would, upon motion, grant a new trial. A judge might, under some circumstances, grant one new trial and refuse a second, or grant a second and refuse a third. In passing on such motions, he is necessarily required to weigh the evidence, that he may determine whether the verdict was one which might reasonably have been reached. But, in passing upon a motion to direct a verdict, his functions are altogether different. In the latter case, we think he cannot properly undertake to weigh the evidence. His duty is to take that view of the evidence most favorable to the party against whom it is moved to direct a verdict, and from that evidence, and the inferences reasonably and justifiably to be drawn therefrom, determine whether or not, under the law, a verdict might be found for the party having the onus. If not, he should, upon the ground that the evidence is insufficient in law, direct a verdict against that party."

See, also, a decision of this court at the present term, announced by Mr. Justice Harlan, in Insurance Co. v. Randolph, 24 C. C. A. 305, 78 Fed. 754.

It is apparent, from the foregoing, that the view of the learned judge at the circuit, expressed in the opinion on the motion for new trial, that because the court cannot direct a verdict one way, it may not set aside a verdict the other way, as against the weight of the evidence, is erroneous. Indeed, as distinctly pointed out by Judge Lurton, the mental process in deciding a motion to direct a verdict is very different from that used in deciding a motion to set aside a verdict as against the weight of evidence. In the former there is no weighing of plaintiff's evidence with defendant's. It is only an examination into the sufficiency of plaintiff's evidence to support a burden, ignoring defendant's evidence. In the latter, it is always a comparison of opposing proofs.

There is a suggestion, in the opinion of the judge at the circuit on the motion for new trial, that to set aside a verdict as against the weight of the evidence is in violation of the seventh amendment to the constitution, providing that no fact tried by a jury shall be otherwise re-examined in any court of the United States than according to the rules of the common law. An examination of Judge Lurton's opinion in the Lowery Case will show that it was the habit of the judges of England, whence came the common law, to set aside verdicts as against the weight of evidence as early as Lord Mansfield's time and earlier. This would seem to show that the re-examination of the evidence necessary to set aside a verdict on such a ground was according to the rules of the common law.

The defendant receiver, therefore, is entitled to have the court below weigh all the evidence, and exercise its discretion to say whether or not, in its opinion, the verdict was so opposed to the weight of the evidence that a new trial should be granted, and the judgment of the circuit court must be reversed for this purpose. This reversal does not set aside the verdict. It only remands the cause for further proceedings from the point where the error was committed. We found no error in the action of the court upon the trial

Digitized by Google

and before verdict, and hence we shall not disturb it, but shall leave it to the trial court, upon consideration of the weight of the evidence, to grant the motion for new trial, or not, as in its discretion it may deem proper. That the supreme court would have taken a similar course in the case of Mattox v. U. S., 146 U. S. 140, 13 Sup. Ct. 50, already cited, had it not been that there were also errors on the trial requiring a new trial, may be seen from the language of the chief justice in delivering the opinion of the court, where, in summing up the result of the action of the court in refusing to consider affidavits on the motion for a new trial, he says (page 151, 146 U. S., and page 53, 13 Sup. Ct.):

"We should, therefore, be compelled to reverse the judgment because the affidavits were not received and considered by the court; but another ground exists upon which we must not only do this, but direct a new trial to be granted."

See, also, Elliott, App. Proc. § 580.

The judgment of the circuit court is reversed, with instructions to the court below to consider and pass upon the motion for new trial in so far as it is based on the ground that the verdict was against the weight of the evidence. The costs of the writ of error will be taxed to the defendant in error. The costs of the circuit court will abide the event.

(78 Fed. 769.)

BENNETT v. SALISBURY.

(Circuit Court of Appeals, Second Circuit. February 23, 1897.)

1. LIBEL—FALSE NEWSPAPER PUBLICATION—MALICE—RECKLESS INDIFFERENCE.
   A newspaper proprietor, absent in Europe, prescribed for his employés a rule that communications of a personal nature sent by unknown correspondents must be verified on investigation by an accredited correspondent, and, when so verified, might be published. *Held*, that where a scandalous story, so received, verified, and published, was utterly untrue, the court, in an action against such proprietor, properly left it to the jury to determine whether the rule evinced such wanton disregard of others' rights, and such reckless indifference to consequences, as to be equivalent to malice, which would authorize the infliction of punitive damages.
2. SAME—ADMISSIBILITY OF EVIDENCE.
   In such case, testimony of the city editor as to his belief in the thoroughness of the investigation was properly stricken out, as his good faith or malice was not in issue, and the question of punitive damages turned entirely on the malice of the defendant.
3. SAME—INSTRUCTIONS.
   Where the publication contained utterly false charges of unchaste and scandalous conduct, the court told the jury it was quite likely they would consider it as an atrocious libel, of the character which, in remoter regions, where respect for law does not prevail to the same extent, is frequently punished by an appeal to the horsewhip or shotgun. *Held*, that this was not error, as, in connection with the whole charge, it was not of an inflammatory character, and amounted to no more than a statement that plaintiff was rather to be commended than prejudiced by appealing to the courts for redress.
4. SAME—EVIDENCE OF SPECIAL DAMAGE.
   Where punitive damages only are sought, and no evidence of special damages is given, evidence by defendant tending to show absence of special damages may be excluded as immaterial.

Digitized by Google

5. SAME—EVIDENCE—JUDGMENTS AGAINST OTHER NEWSPAPERS.
Evidence that plaintiff has recovered a judgment against another newspaper for publishing the same libel is inadmissible.

Appeal from the Circuit Court of the United States for the Southern District of New York.

John A. Taylor, for plaintiff.
Joseph H. Choate, for defendant.

Before WALLACE and SHIPMAN, Circuit Judges.

SHIPMAN, Circuit Judge. Everett E. Salisbury, the defendant in error, brought an action in the circuit court for the Southern district of New York against James Gordon Bennett, the publisher and proprietor of the New York Herald, to recover damages for a libel which was published in that newspaper on November 28, 1892, and recovered a verdict for $5,000, whereupon the present writ of error was brought by the defendant in the trial court.

The libel, after the headlines: "Wrecked Two Families. Bertha Kinney's Confession Made Her Mother Insane and Drove Her Father to Resign His Pastorate,"—proceeds as follows:

"Plainfield, Conn., November 27, 1892. The facts have come out to-day in a scandal of the most painful character in the flourishing factory village of Moosup, near this town. The two families involved are the most prominent and influential in the village, and one of them is practically destroyed, the daughter being disgraced, the mother made insane, and the father, a preacher, so overwhelmed with shame and sorrow that he has retired from the ministry. The ruin was caused by the relations between E. E. Salisbury, the wealthiest man in the village, who has a beautiful home and an interesting family, and Miss Bertha Kinney, the daughter of the Rev. G. W. Kinney, pastor of the Baptist Church."

The libel, after giving a sensational story in regard to the discovery of Miss Kinney's condition, the almost hopeless insanity of her mother in consequence, and of the resignation as pastor of "the heart-broken father," said:

"What will be the result of the exposure in the Salisbury family remains to be seen, but Mr. Salisbury stands deeply disgraced in the eyes of all the people of the town in which he had long maintained an irreproachable character."

On the night of November 26th this article was sent by telegraph to the Herald office, and was signed by an unknown person. The employé who acted at the time as night city editor telegraphed the substance of the story to the "accredited" or known correspondent of the Herald in Plainfield, asked him to investigate it, and reply at once whether it was true or false. Moosup is a manufacturing village of 2,500 or 3,000 inhabitants, in the town of Plainfield. This dispatch came within what was called the "city department" of the Herald, which included a radius of about 100 miles, except Philadelphia, from New York. In this department the newspaper had numerous "accredited" agents or correspondents. A witness, who had been connected with the Herald, said: "It would be impossible to tell the number. At every little place they had a correspondent." Reply was received from the regular correspondent about 11 o'clock in the evening of November 27th that the account was correct, whereupon it was published. The entire story, in all

Digitized by Google

its incidents, turned out to be baseless, and on January 16, 1893, the Herald published a retraction, in which it said that it had made a thorough investigation, and, in substance, that no ground for allegations or suspicions against either of the parties ever existed, and that it had been imposed upon by its news correspondent, who had ceased to have any connection with the Herald. Upon the trial no evidence of special damage was introduced by the plaintiff, and the falsity of the libel was admitted by the defendant. At the time of the publication the defendant was in Paris, and it was apparently conceded that he had no personal ill will against the plaintiff, and had probably never heard of him.

The important question which arises upon the bill of exceptions is in regard to the charge of the trial judge upon the subject of punitive damages. It was testified that the defendant's rule was that the employés should never take anything that should be sent to them by anybody who was not regularly in their employ, and should not print such communications unless they could be verified. Another witness said that the rule was that, when matter of a suspicious nature reached the office, it was not, under any circumstances, to be published, unless each and every statement contained in it was fully verified on investigation by accredited correspondents, or in some other way. The court, after charging the jury upon the question of compensatory damages, charged that the plaintiff was not entitled to punitive damages on account of personal malice or personal ill will on the part of the defendant, and that:

"The only theory upon which it is claimed that exemplary or vindictive damages should be given in this case is upon the theory of reckless indifference to the rights of others. The rule has been laid down by the courts that, even where no actual malice is shown, exemplary damages may be given when there is proved such wanton disregard or such reckless indifference to the rights of others as is equivalent to the intentional violation of such rights. There are cases which have held that a jury was warranted in finding such reckless indifference where a newspaper published libelous statements with regard to an individual without making the slightest effort to investigate into their truth or falsity. Now, the situation here is different from the situation in those cases, because you have evidence here of the employés of the defendant as to the rules of the office. The principal, Mr. Bennett, has prescribed certain rules for the guidance of his subordinates, and for the negligence of his subordinates he is responsible, whether they obey the rules or not. For a malicious act on the part of a subordinate the principal is not responsible, unless he himself has been in fault; that is, in the sufficiency of the rule which he has prescribed. The rule in force in the Herald office at that time was that, where communications libelous in character were received from some one unknown to the paper, they were not to be published until the paper had sent to its accredited representative in the place where the notice came from, and had been informed by him that the statement was accurate."

After stating the arguments which the plaintiff had suggested against the sufficiency of the rule, the judge further charged:

"Bearing those rules in mind, you will determine whether, in publishing this article in the way in which it was published,—that is, hanging it up for twenty-four hours until the accredited agent could be communicated with, and not publishing it until he had vouched for the accuracy of the article,—you are to determine, in the first place, whether or not that rule allowed publications to be made with such wanton disregard of another's rights, and such reckless indifference of consequences, as would be the equivalent of malice. If you reach that

Digitized by Google

conclusion, you may add compensatory or vindictive damages to the amount which you will find the plaintiff entitled to for injury to his feelings, and for the besmirchment of his reputation. But, unless you do reach the conclusion that the methods adopted in the Herald office under the direction of Mr. Bennett himself, as his personal regulation of the machinery under his control, were so devised that they may fairly be said to be recklessly indifferent to the rights of others, you are not entitled to add anything for exemplary damages to the amount of your verdict."

The defendant excepted to so much of the charge as permitted the jury, under any circumstances of the case, to allow exemplary damages, and to that part of the charge which permitted the allowance of such damages if they found that the rule of the defendant allowed publication to be made with such reckless disregard of others' rights as to amount to malice. The subject of the care that shall be demanded from the large daily newspapers of the country in the investigation of the charges of misconduct or of crime which they publish in regard to persons who are comparatively unknown beyond the communities in which they live, has been, of late, frequently before judges and juries. It has become the course of business of newspapers of this class to receive announcements of this character from news bureaus and from numerous special correspondents who are scattered over the country, and it has been the custom of some daily journals to rely upon the good faith and accuracy of these correspondents, and to publish, in substance, whatever they sent over their own signatures, without further investigation into its truthfulness, and, in an action for libel, when the falsehood of the publication was manifest, to attempt to ward off the charge of recklessness by saying that the information was received and was published in the usual course of business. Neither judges nor juries have been satisfied with the sufficiency of this kind of care. It is so insufficient as to be justly regarded as an absence of care, and as recklessness with respect to the rights and reputations of strangers to the publisher. The excuse was itself regarded as indicative of a careless indifference to and ignorance of the obligations of an owner to use his property so as not to injure others.

This case presents a different state of facts and a different defense upon the subject of punitive damages. The defendant was an absentee, and, in addition to the fact that he could have no personal ill will against a plaintiff of whom he had never heard, he had no personal oversight over the conduct of his agents, and could not be visited with punitory damages for recklessness which he had neither known nor permitted nor countenanced. Thus, Mr. Justice Gray, in Railway Co. v. Prentice, 147 U. S. 101, 13 Sup. Ct. 261, in discussing the law relating to punitive damages against a principal for the unauthorized tort of his agent, says: "Though the principal is liable to make compensation for a libel published or a malicious prosecution instituted by his agent, he is not liable to be punished by exemplary damages for an intent in which he did not participate." The defendant, therefore, for the purpose of showing that he did not give his employés license to publish libelous articles without investigation, and could not, therefore, be

Digitized by Google

considered as participating in their conduct if it was malicious, gave evidence of the rules which have been stated. The trial judge was, therefore, called upon to look at the rule, and see whether, if carried out, it shut the door against recklessness, or if it was simply a course of conduct which was recklessness in itself. He was properly of the opinion that an absent owner of a newspaper, who had left the reputations of people to protection by this rule only, could not be said to be, as matter of law, freed from liability to punitory damages, and that the question was one of fact for the jury. He therefore instructed the jury in the language which has been quoted.

The rule was, in substance, that communications of a personal nature, which were sent by unknown correspondents, must be verified on investigation by an accredited correspondent, and, when thus verified, might be published; and the question which was submitted was whether, upon its face, and in view of the known hazards which attend the imprimatur of an accredited correspondent, it was not merely inadequate, but was so devised as to show that the owner of the newspaper was recklessly indifferent to the rights of others. Experience has shown it to be a fact that the rule of implicitly trusting a newspaper correspondent is a dangerous one, and that of all slanders those in regard to chastity require prudent investigation, lest the character of innocent persons should suffer a lifelong injury. The rule in question turned over a suspicious story from an unknown author to the regular correspondent. The rule is silent in regard to the character of the investigation, the character of the man who is to make it, the caution, the prudence, the thoroughness with which it must be conducted, the amount of proof which must be required, or the extent of the report which must be made. The story which was received at the office of the Herald, if it was true, wrecked, and if it was not true, must injure, the happiness of two families, and was of such a character as to require especial caution before publication. The jury probably found that the rule was inadequate to meet the imperative demands for prudence and caution which an investigation of the truth of such a narrative required. If such a rule is to protect from punitive damages the absent or nonresident or resident owners of newspapers who intrust the management of their large property and business to subordinate agents, the principle of law which makes careless indifference to an injury which may happen to others equivalent to malice can be easily avoided. It is probably true that the requirement of a more stringent rule and more searching habits and practice of investigation and of more self-denial in respect to the publication of libelous matter would compel a marked diminution of that style of news, but such a result would not be a cause for anxiety.

A sentence in the charge of the judge is excepted to in which he told the jury that it was quite likely that they would consider that it was an atrocious libel, of the character which in remoter sections of this country, where respect for the law does not prevail to the extent that it does here, is frequently punished by an ap-

Digitized by Google

peal to the horsewhip or the shotgun. That it was an atrocious libel was manifest, and was not denied. The context shows that the remaining part of the sentence was for the purpose of suggesting to the jury that an appeal to the courts of the country for reparation was not to be regarded as improper or unmanly. The remark, read in connection with the whole charge, was not of an inflammatory character. It was but the statement of a fact within common knowledge, and in substance amounted to no more than telling the jury that the plaintiff should rather be commended than prejudiced by choosing a judicial tribunal for redress.

Questions were asked of the night city editor, who was in charge of the office when the communication was referred to the regular correspondent, as to his belief in the thoroughness of the investigation. The answers were stricken out upon motion, to which the defendant excepted. The good faith or the malice of the city editor was not in issue, for the question in regard to punitory damages turned entirely upon the malice in fact, if any there was, of the absent defendant.

The plaintiff was asked by the defendant if he knew of any one in Moosup who believed the story, and if he had lost his status in society or in the church, and if he had lost business in Moosup in consequence of the libel, which questions, upon objection by the plaintiff as immaterial, were ruled out. No special damage was attempted to be proved. It was not claimed upon the trial that he had sustained such damage, and the jury were consequently informed in the charge that there was no evidence of any pecuniary loss sustained. Inasmuch as the plaintiff's testimony was silent in regard to special damage, the attempt to prove its absence became immaterial.

An objection was made to the defendant's attempt to prove that the plaintiff had recovered judgment against another newspaper for the publication of the same libel, which objection was sustained. The same question, in substance, was considered by this court in Printing Ass'n v. Smith, 14 U. S. App. 173, 5 C. C. A. 91, and 55 Fed. 240, and was properly regarded as immaterial. The judgment of the circuit court is affirmed, with costs.

(78 Fed. 774.)

NATIONAL ACC. SOC. v. SPIRO.

(Circuit Court of Appeals, Sixth Circuit. February 2, 1897.)

No. 260.

1. EVIDENCE—PROOF OF LETTERS.

Upon the trial of an action against the N. Co., a witness testified that he mailed a letter, addressed to the home office of the company; that he received in reply a letter written on a printed letter head of the N. Co., which was signed with a rubber stamp fac simile of the signature of an officer of the company, who had signed a plea in the action, and which referred to the subject-matter of the witness' letter to the N. Co. *Held*, that the letter received by the witness was sufficiently proven, and was admissible.

Digitized by Google

2. APPEAL AND ERROR—DEFECTIVE ASSIGNMENTS OF ERROR—WHEN CONSIDERED.
Under the discretion reserved in rule 11 of the circuit court of appeals (21 C. C. A. cxii., 78 Fed. cxii.), as to noticing errors not assigned, if an assignment which does not comply with the rule has any sound merit in it, and the court can be satisfied from the whole record that a probable injustice has been done, it will be disposed to notice the error so defectively assigned; but, if the error complained of is highly technical, the record indicating no probable injustice, the court will not incline to leniency in the enforcement of the rule, though, if the error had been correctly assigned, it might have felt constrained to reverse the judgment because of it.

3. PLEAS IN ABATEMENT—JUDGMENT.
Under the practice at common law prevailing in Tennessee, when a plaintiff succeeds upon an issue joined on a plea in abatement the proper judgment is peremptory that the plaintiff recover.

In Error to the Circuit Court of the United States for the Eastern District of Tennessee.

Action upon a contract of accident insurance between the National Accident Society, a corporation organized under the laws of the state of New York, and Herman Spiro, the assured. The contract provided, among other things, for the payment of $5,000 to Fannie Spiro, wife of the assured, in the event said assured should, during the continuance of the contract, come to his death "through external, violent, or accidental means." An action was begun upon this agreement by Fannie Spiro in the circuit court of the state of Tennessee for Knox county. The writ of summons was issued and executed April 17, 1894, by service upon one H. D. McBurney, as an "agent and adjuster" of said nonresident corporation found in Knox county. Upon the filing of the plaintiff's declaration the cause was removed to the circuit court of the United States for the Eastern district of Tennessee, upon petition of the defendant corporation, upon the ground that it was a citizen of the state of New York, and the plaintiff a citizen of the state of Tennessee. After the removal, the defendant filed a plea of abatement, denying that H. D. McBurney, on whom process had been served, was at the time of said service, or before or since, an agent of said corporation of any kind or character. This plea was verified by Jos. I. Barnum, secretary of the said corporation. To this a replication was filed, averring that when the writ of summons was served upon H. D. McBurney he was an agent of said corporation. Issue was joined, and a jury impaneled, who found the issue for the plaintiff; whereupon judgment was entered "that the plaintiff, Fannie Spiro, recover of said defendant her damages on account of the matters alleged in her declaration to be assessed at the present term of the court." A motion for a new trial was entered and overruled, and thereupon the same jury was again impaneled and sworn, to well and truly assess the damages so sustained, who found for the plaintiff in the sum of $5,055, for which judgment was duly entered. A bill of exceptions was allowed, and a writ of error has been sued out, and error assigned.

Cooper & Davis (McBurney & McBurney, of counsel), for plaintiff in error.

Ingersoll & Peyton, for defendant in error.

Submitted on briefs without oral argument.

Before TAFT and LURTON, Circuit Judges, and SEVERENS, District Judge.

LURTON, Circuit Judge, after making the foregoing statement of facts, delivered the opinion of the court.

The only questions presented by the assignment of errors relate to the proceedings on the trial of the issue joined on the plea in abatement. That issue was one of fact, and involved the single question as to whether H. D. McBurney was an agent of the National Accident Society of any kind at the time process was served

Digitized by Google

upon him. The Tennessee statute of March 29, 1887 (Acts 1887, c. 226) concerning suits against corporations of other states "found doing business in the state," provides that all such corporations may be sued in respect of business transacted within the state, and that process may be served "upon any agent of such corporation found within the county where the suit is brought, no matter what character of agent such person may be." To secure actual notice of the pendency of such suit, the statute further provides that it shall be the duty of the clerk of the court "to immediately mail a copy of the process to the home office of the corporation by registered letter," and to file with the papers a certificate of the fact of such mailing, and make a minute thereof upon the docket; "and that no judgment shall be taken in the case until 30 days after the date of such mailing." The fourth and last section of that act, as further security for actual notice, provides as follows:

"That it shall be the duty of the plaintiff to lodge at the home office of the company, with any person found there, a written notice from him or his attorney, stating that such suit has been brought, accompanied by a copy of the process and the return of the officer thereon, of which fact affidavit shall be made by the person lodging the same, stating the facts and with whom the notice was lodged, or else the plaintiff or his attorney shall make an affidavit that he has been prevented from serving such notice by circumstances which should reasonably excuse giving it, which circumstances the affidavit of the plaintiff or his attorney shall particularly state; and no judgment shall be taken until one or the other of these affidavits shall be filed and the court be satisfied that the notice had been given, or that the excuse for not doing so be sufficient."

All the steps required by this statute for the purpose of giving actual notice of the pendency of this suit in the circuit court of the state were complied with before the declaration was filed, and the only question made below upon the trial of the issues under the plea of abatement was in respect to the actual relationship of H. D. McBurney to the defendant below. The effect of the appearance in the state court for the purpose of removing the suit to the circuit court, unaccompanied by a plea in abatement, and unaccompanied by any qualification of the objects of the appearance, did not operate as a waiver of the right to object to the jurisdiction of the state court over the person of the defendant below, and did not cut off the right to plead in abatement after the removal had been perfected. This question was certified to the supreme court at a former term of this court. Society v. Spiro, 18 C. C. A. 382, 37 U. S. App. 639, 71 Fed. 897. The opinion of that court upon the question thus certified is reported in 164 U. S. 281, 17 Sup. Ct. ——. Upon the trial of the issues joined under the plea in abatement, Masterson Peyton, one of the attorneys representing the plaintiff below, testified without objection that the claim of Fannie Spiro was placed in the hands of Ingersoll & Peyton, a firm of lawyers at Knoxville, Tenn., for collection, and that he at once mailed a letter, duly addressed to the home office of the National Accident Society in the city of New York, asking for blank forms upon which he might make out formal proofs of the death of the assured, Herman Spiro. He then said, "I received

Digitized by Google

this letter in reply," and started to read the same to the jury. The defendant objected to the introduction of this letter, "because the same had not been duly proven." Before any ruling was made upon this objection, the witness further said:

"I am not acquainted with the handwriting of the defendant, or any of its officers. The letter is signed by Jos. I. Barnum, the secretary of the defendant, and the same person who has signed the plea in abatement filed in this cause. The signature to the letter seems to have been placed there by a rubber stamp, and is a fac simile of the signature of said Jos. I. Barnum, as it appears on said plea."

The objection to the introduction of the letter in evidence was renewed, "because the same had not been duly proven, and that comparison of handwriting could not be resorted to, to identify and prove a written instrument, especially so inasmuch as the signature affixed to said letter was done by a rubber stamp, and not under the seal of the company, or under its signature." The objection was overruled, and the letter admitted as evidence. The letter was written upon what purported to be a printed letter head of the accident society, and described Jos. I. Barnum as the secretary and general manager of the company. The letter was as follows:

"New York, April 11, 1894.

"Messrs. Ingersoll & Peyton, Knoxville, Tenn.—Gentlemen: Replying to yours of the 9th, I herewith inclose, without prejudice to the rights of our society, blanks upon which to submit to us proofs of death in the case of Herman Spiro; and, with further reference to this matter, will say that our adjuster, Mr. McBurney, who is at present in Terre Haute, Ind., received instructions from us some little time ago to call at your office, and make a personal investigation into the matter of Mr. Spiro's death. He has full authority to act for us, and will show the same to you on his arrival.

"Very truly yours, Jos. I. Barnum, Secy. & Genl. Mgr."

Did the court err in permitting this letter to go to the jury? The letter was one received in reply to one addressed to the plaintiff in error at its home office in New York. It came, or purported to come, from New York, and purported to be a communication from the plaintiff in error. It was written upon the business letter heads of the corporation, and to it was affixed, by stamping, a fac simile signature of its secretary and general manager. The circumstances made a prima facie case in favor of the genuineness of the letter, and justified its submission to the jury, who were the ultimate triers of the fact of its genuineness. The general rule which requires proof of handwriting where the genuineness of a document or paper writing is involved, has its exceptions. There was no question in the case of proof of handwriting by comparison. The plea in abatement and other papers already in the case did show the undisputed genuine signature of Jos. I. Barnum; and, if it had been claimed that this letter had been written or signed in the handwriting of the same Jos. I Barnum, it would have been competent for the jury to have tried the question of handwriting by comparison of the disputed signature with the admittedly genuine signatures already in evidence for other purposes, though such comparison was probably not admissible by

Digitized by Google

experts. Moore v. U. S., 91 U. S. 270; Hickory v. U. S., 151 U. S. 303, 14 Sup. Ct. 334. Of course, no such comparison could have been made between a stamped signature and one handwritten, though the circumstance that one was a fac simile of the other might well add to the presumption of genuineness already raised by its receipt in reply to one addressed to the corporation at its place of business. In considering the exceptions to the general rule requiring proof of handwriting where the genuineness of a letter is involved, Prof. Greenleaf, in his work upon Evidence, at section 573a, says:

"A further exception to the rule requiring proof of handwriting has been admitted in the case of letters received in reply to others proved to have been sent to the party. Thus, where the plaintiff's attorney wrote a letter addressed to the defendant at his residence, and sent it by the post, to which he received a reply purporting to be from the defendant, it was held that the letter thus received was admissible in evidence, without proof of the defendant's handwriting; and that letters of an earlier date, in the same handwriting, might also be read, without other proof."

The same exception is approved in Wharton on Evidence, at section 1328.

The next error assigned is in these words:

"The court erred in allowing the witness for the plaintiff, Masterson Peyton, to give to the jury the contents of the paper writing which said witness, said H. D. McBurney, showed him upon his arrival in Knoxville, and which, according to Mr. Peyton's testimony, was a power of attorney from the defendant to the said H. D. McBurney, without first showing that said writing was lost or destroyed, that it was in the possession of the defendant and therefore could not be produced."

The witness Peyton, after identifying the letter of April 11, 1894, and after it had been allowed to go to the jury, proceeded to say, that:

"After the receipt of this letter on April 17, 1894, a man came to my office, and introduced himself as a Mr. McBurney of New York, and presented to me written authority from the defendant company to settle and adjust the claim of Fannie Spiro; and said that he was acting for the defendant, and had come here to adjust the claim of Fannie Spiro, the plaintiff, against the defendant. He told me he had full authority from the company. He also showed me an instrument, with the seal of the company attached, which"—

Here the attorneys for the defendant objected to the witness giving the contents of said paper writing, because it had not been shown that the paper writing had been lost or destroyed, or that the plaintiff could not have had the same produced, and submitted to the jury. The court overruled said objection, and allowed the witness to give the contents of said paper writing to the jury as he remembered it. The said witness, resuming, said:

"It was a power of attorney or authority from the company to Mr. McBurney to act for it. McBurney took the paper with him. He did not leave it with us. He and I talked some time, and tried to settle the claim; but we failed to come to any agreement. He then left my office. Before he left town, on the same day, the plaintiff commenced her case against the defendant in the circuit court of Knox county, Tennessee, and on the same day process was served on Mr. McBurney, as agent of the defendant."

For the defendant in error it is urged that the assignment of error does not comply with rule 11 of this court (21 C.C.A. cxii., 78 Fed. cxii.)

Digitized by Google

in several respects: First, that it does not quote the full substance of the evidence admitted; second, it does not point out any error committed by the court; and, finally, that, though the ruling of the court may have been an abstract error, it was innocuous, because the evidence added nothing of weight to that already in, and because in fact the witness did not prove the contents of the paper writing, only characterizing it as a power of attorney authorizing McBurney to represent the corporation. The eleventh rule of this court, after providing for assignments of errors, provides, that "errors not assigned according to this rule will be disregarded, but the court, at its option, may notice a plain error not assigned." This assignment is not in compliance with the rule which requires, "when the error alleged is to the admission or rejection of evidence, the assignment of error shall quote the full substance of the evidence admitted or rejected." Neither does it particularize the error which is really complained of. The witness had shown, not that the paper writing in dispute was lost or mislaid, but that it had been returned to the possession of the defendant's agent, and was, therefore, under the control and in the possession of the defendant. It was, therefore, shown, contrary to the statement in the assignment of error, that the so-called "power of attorney" was in the possession of the agent of the defendant, and presumably could be produced, not by the plaintiff, but by the defendant. This was not such a document as that parol evidence of its contents could be given upon mere proof that it was in the control of the opposite party. Plaintiff should have gone further, and shown that notice had been given the defendant to produce the document on the trial. If, on such notice, this was not done, secondary evidence as to its contents would be admissible, after proof of its existence. Greenl. Ev. § 560. But the assignment of error does not assign as error that notice was not given the defendant to produce this paper. This, however, is the very point now pressed on us as error. If this assignment had been in compliance with the plain rule of the court, we should feel constrained to reverse the judgment, and remand for a new trial. So, if the error had any sound merit in it, and we could be satisfied from the whole record that a probable injustice had been done, we should be disposed, under the discretion reserved in the rule, to notice a plain and meritorious error, though not assigned. That is not the case here. The letter of April 11, 1894, above set out, distinctly declared that "H. D. McBurney has full authority to act for us, and will show the same to you on his arrival." In accordance with this authoritative announcement by the secretary and general manager of the corporation, Mr McBurney did make his appearance in Knoxville, and in the office of the attorneys representing Mrs. Spiro. That letter was prima facie evidence of McBurney's agency. It was competent, therefore, to show the acts and declarations of the agent, whose agency was at least prima facie established. The witness Peyton was permitted, without objection, to testify that McBurney said that he "was acting for the defendant company to settle and adjust the claim of Fannie Spiro," and said "he had

Digitized by Google

full authority from the company, and showed him an instrument, with seal of the company attached, which," said the witness— At this point it was objected that the witness could not give the "contents of said paper writing, because it had not been shown that the paper writing had been lost or destroyed, or that the plaintiff could not have had the same produced, and submitted to the jury." The bill of exceptions states that "the court overruled said objection, and allowed the witness to give the contents of the paper as he remembered it." The only disclosure then made by the witness which could possibly be construed as a statement of the contents of the paper was the statement that "it was a power of attorney, or authority from the company to Mr. McBurney to act for it." We cannot construe this objection as relating to anything previously stated by the witness. It is an objection to evidence anticipated, and must be taken as an objection to the witness being allowed to say that the paper exhibited to him was a power of attorney authorizing McBurney to act for the defendant. This was no more than had been said without objection, and was little more than a description of the paper exhibited as authorizing the negotiation which the witness said was then had without arriving at a result. A written statement made by this same H. D. McBurney and by Jos. I. Barnum, secretary and general manager of the company, was received as the sworn deposition of each, and read to the jury as evidence for the defendant. Neither denied the execution of such a power of attorney as was mentioned by the witness Peyton, and neither, in this statement, denied the authenticity of the letter of April 11, 1894. In fact, neither made the slightest reference to either of these written admissions touching the agency of Mr. McBurney. The evidence of those two important witnesses was confined to a statement that McBurney was a lawyer, residing in New York, and the president of a corporation of the state of New York known as the Mercantile & Insurance Agency; that the business of such corporation was to "secure facts and give advice to mercantile and insurance companies"; that that company was employed by the defendant below "to furnish to it the facts and circumstances surrounding the death of said Herman Spiro," and that the said Mercantile & Insurance Agency sent McBurney to Knoxville as one of its counsel to investigate said matter, "and he was not in any way connected with the defendant as officer or agent or in any other capacity. He had no authority to bind the defendant in any way, and he could not compromise or adjust any claim. All he could do was to ascertain the facts, and report them to the Mercantile & Insurance Company, which company would in turn report to its client, which, in this case, was the defendant, and which is a corporation of the state of New York." This evidence conflicted most materially with the letter of April 11, 1894, and with the statements of Mr. McBurney to Peyton; yet neither the letter nor the declarations of McBurney are denied or explained, and no denial is made of the statement that McBurney exhibited a paper purporting to be a power of attorney from the defendant to him authorizing him to

Digitized by Google

represent it. And this was the entire evidence upon the issue joined under the plea in abatement. Under the Tennessee statute above cited, the character of McBurney's agency was immaterial, and the plea denies that he was an agent of any character. Whether his agency was such as at common law would justify service of a writ of summons upon him as a representative of the company is immaterial. If the company had refused to appear or defend said suit, and, when sued upon the judgment in the state of its creation, had attacked the validity of a statute which sought to obtain jurisdiction by service upon an agent of the character of McBurney; or if, when its property was seized under such a judgment, it had resisted upon the ground that the judgment was void,—it would have some standing to assail the judgment as without personal service, and to attack the Tennessee statute as violating the fourteenth amendment of the constitution that forbids a state to "deprive any person of life, liberty, or property, without due process of law." York v. Texas, 137 U. S. 15, 11 Sup. Ct. 9. But this is not the situation of plaintiff in error. It appeared and staked its defense upon the fact of McBurney's agency. That issue has been decided adversely to its contention, and nothing is now open on this record save the proceedings upon the trial of that issue. The failure of both Barnum and McBurney to deny the genuineness of either the letter of April 11, 1894, or of the power of attorney exhibited by McBurney to Peyton, or to deny the declarations of McBurney as proven by Peyton, is most persuasive evidence as to the truth of all that was said by the latter, and of the genuineness of the letter admitting the agency of McBurney. To reverse this case because Peyton was permitted to say that the paper writing shown him by McBurney was "a power of attorney from the plaintiff in error authorizing him to act for the corporation," when McBurney did not deny that he had and exhibited such a paper, would be to reverse for the merest technicality. The facts about this matter were certainly known to one or both of these witnesses, and their silence justifies the conclusion that their testimony upon these points would not be favorable to the plaintiff in error. The objection now urged is so highly technical that we do not feel disposed to leniency in the enforcement of the rules of the court, as we might do, in our discretion, if the error urged was meritorious.

The third and fourth assignments of error are to the refusal of the court to give in charge certain requests. These requests are not made a part of the bill of exceptions. They appear in the record following the bill of exceptions, but are not part thereof. No journal entry either sets them out or refers to them, so that they are in no way made a part of the record, as in Wilson v. Pauly, 18 C. C. A. 475, 72 Fed. 129. Neither does it appear whether these requests were made before or after the charge. To the charge no exception was taken. The assignments of error based upon these requests must therefore be overruled.

The ninth assignment is that the court erred in rendering judgment upon the policy of insurance, because the suit was prema-

Digitized by Google

ture, the policy providing "that all claims under this certificate shall be subject to proof of insurable interest, and shall be payable within ninety days after satisfactory proof." The assignment states that proof was brought within less than 90 days after the death of the assured. It is perhaps enough to say that the company repudiated all liability upon the policy, and refused to pay at all. This waived the stipulated delay, and authorized immediate suit. Hochster v. De La Tour, 2 El. & Bl. 678. But, aside from this, no such question was made below, and perhaps could not have been made after going to a jury upon a plea in abatement. "Where the plea in abatement is regularly put in, the plaintiff must reply to it or demur. If he reply, and an issue of fact be thereupon joined, and found for him, the judgment is peremptory quod recuperet." 1 Tidd, Prac. § 641. The reason stated is that, "the defendant choosing to put the whole weight of his cause on this issue, when he might have had a plea in chief, it is an admission that he had no other defense." 1 Bac. Abr. 31; 1 Archb. Pl. 225. This is the practice in Tennessee. Bacon v. Parker, 2 Tenn. 57; Straus v. Weil, 5 Cold. 126, 127; Simpson v. Railway Co., 89 Tenn. 308, 15 S. W. 735.

The eighth assignment of error was that it was error to render final judgment against the defendant, and the judgment should have been respondeat ouster. This assignment was properly withdrawn by counsel for plaintiff in error, as it was manifestly bad.

The judgment must be affirmed.

(78 Fed. 784.)

GRAND TRUNK RY. CO. OF CANADA v. COBLEIGH.

(Circuit Court of Appeals, Second Circuit. February 23, 1897.)

RAILROADS—ACCIDENT AT CROSSING—INSTRUCTIONS—DUTY TO LOOK AND LISTEN.

In an action against a railroad company for alleged negligence in running over the plaintiff while crossing its tracks at a highway crossing, the defendant is entitled to have the jury specifically instructed as to the duty of the plaintiff, under such circumstances, to look and listen for a train, before attempting to cross the track, especially when the plaintiff's own testimony suggests that he may have been negligent in this respect; and a general charge that the plaintiff was bound to act as a prudent man would do under the circumstances, leaving it for the jury to fix the standard of prudence, is not sufficient.

In Error to the Circuit Court of the United States for the District of Vermont.

This was an action by Wayne Cobleigh against the Grand Trunk Railway Company of Canada to recover damages for personal injuries. The plaintiff recovered a verdict. A motion for a new trial was denied (75 Fed. 247), and the defendant now brings error to review the judgment against it.

A. A. Strout, R. N. Chamberlin, and C. A. Hight, for plaintiff in error.

Bates & May, for defendant in error.

Digitized by Google

Before WALLACE, LACOMBE, and SHIPMAN, Circuit Judges.

WALLACE, Circuit Judge. This is a writ of error by the defendant in the court below to review a judgment for the plaintiff entered upon the verdict of a jury.

The action was brought to recover damages for injuries sustained by the plaintiff by the alleged negligence of the defendant. While driving his team over the defendant's tracks where they intersected a public highway in the town of Stratford, N. H., he was struck by one of the defendant's trains. The negligence imputed was the failure of the defendant to sound the whistle and ring the bell upon the locomotive, as required by the statutes of the state. Error is assigned of the refusal of the trial judge to instruct the jury as requested in behalf of the defendant. The assignments of error present the single question whether the rulings of the trial judge in respect to the issue of the plaintiff's contributory negligence were correct.

It appeared upon the trial that the accident took place on a November day, about noon, when there was a snow storm. The general course of the defendant's railroad was substantially north and south, and that of the highway was substantially east and west, the intersection being at practically a right angle. The plaintiff was on his way from the nearest village to his home, which was about four miles beyond the crossing, proceeding westerly, driving a pair of horses harnessed to a farm wagon. Along the highway easterly of the crossing, for a distance of about 1,200 feet, there was an unobstructed view of the railway track to the southerly as far as the station house and beyond. The station house was about 90 rods southerly from the crossing; and from the crossing to this building, and to a considerable distance southerly beyond, the railroad track ran upon an embankment higher than the adjacent land at either side. As the train which struck the plaintiff approached the semaphore located southerly from the station house, the whistle of the locomotive was blown. The plaintiff testified that when he was about 35 rods easterly from the crossing he heard this whistle; thought it was sounded at the semaphore, and supposed it to be a signal from a train coming from the south; that he knew that there was an express train from the south due at about that time, which did not stop at the station house, but that he gave the matter no thought. He further testified:

"After I heard the whistle, I kept driving along until I got within, I should judge, eight to twelve rods from the track, and I stopped my team to see if I could see the train. I had heard it whistle distinctly. There was quite a bluster of snow coming directly in my face that blinded my view of the train, and I could not see it, and thought it had stopped. I started the team to go. I thought I could have ample time before they could get up steam to get by the tracks. The horses started into a trot. The first thing I knew after I started them, just as they was going to or did strike the track, the off mare threw up her head, and snorted, and I looked, and it looked as though the engine was coming right across into my lap, and I hollered and slapped the horses. They struck me. That is all I knew about it."

A witness for the plaintiff, who was proceeding along the highway in the same direction with the plaintiff, and about 30 rods behind

Digitized by Google

him, testified that he saw the train coming, and when plaintiff was some 15 or 20 rods from the crossing saw the plaintiff's horses were prancing; that he thought plaintiff did not see the train, and would have trouble with his horses. The testimony of other witnesses who were in the vicinity of the crossing at the time tended to show that the snow storm was not such as to obscure appreciably seeing the train a long distance away as it approached. Testimony was given tending to show that the train approached the crossing at a very high rate of speed, and did not give the statutory signals. Upon the question of the plaintiff's contributory negligence the trial judge instructed the jury as follows:

"So you see that, although the railroad company brought this upon him, if he had a share in it, and contributed to it, he was in fault. In that view it becomes necessary to look at what would be a fault on his part. This is to be looked at in view of all the circumstances and in view of the law. He was situated just as he was, and heard the whistle, and the situation was as the evidence has shown it to be, and the law of the state of New Hampshire required that these two long and two short whistles should be given, and the bell be rung all the way. He had a right to rely on that being done. He had a right to expect that the law would be complied with. Now, take it altogether, in view of what he had a right to expect about that, in view of what he could see if he had looked, in view of what he could hear if he had listened, in view of the storm of snow and wind then going on as has been described,—look at the whole thing, and see if he did anything that a prudent man would not have done, or omitted anything that a prudent man would not have omitted, that brought this upon him. You know what a prudent man is. I do not qualify it one way or the other. But being right in his place, as is shown by the evidence; and in view of what he had a right to expect from the train; his knowledge that the railroad was there; the difficulty he had in seeing, bundled up as you think he was, to hinder his hearing; stopping, and doing just exactly what the evidence shows he did,—did he act prudently? If he did, that does not hinder his recovering. If he did not,—if his doing what he ought not to have done, or failure to do what he ought to have done, brought this upon himself, contributed to what happened,—then he is not entitled to recover; that is, contributed substantially, so that when you look at it you can say that, although the railroad company was in fault, he was too, and his fault helped the fault of the railroad company to bring this upon him."

The defendant requested the following instructions, among others:

"(3) That it was the duty of the plaintiff, after his attention had been called to an approaching train, to look and listen for such train at such distance from the crossing as to enable him to ascertain whether or not he could safely pass over the same without collision. And that, if they find that he did not so look and listen, he would be guilty of such contributory negligence as would prevent his recovery in this action, provided that such want of care contributed to produce the injury."

"(8) That it is not sufficient to enable the plaintiff to recover, if it appears that he stopped at a distance of two hundred feet from the crossing, and being then unable, on account of a snow squall, to see the train which he had heard whistle, started his horses, and drove at a trot onto the track, without again looking for the train. If, under such circumstances, he drove onto the track, and injury ensued, he was guilty of contributory negligence, and cannot recover, even though the jury find that the defendant was also negligent in not giving proper signals for the crossing."

These instructions were refused, and the trial judge declined to instruct the jury in respect to the issue of the contributory negligence of the plaintiff other than as he had already instructed them. The defendant duly excepted to the instructions thus given and refused.

Digitized by Google

We think the defendant was entitled to the instructions requested. The plaintiff's own testimony suggested, if it did not prove, a strong case of contributory negligence on his part. It would have justified a finding by the jury that he knew that a fast train from the south, which did not usually stop, had signaled its approach to the station; that such a train, being where the signal located it, would reach the crossing about the time he would; that he gave no thought to these circumstances, but proceeded, without paying any attention to them at all, until he reached a place about a dozen rods from the crossing; that he then stopped and looked and listened, but did not hear the train, and, owing to the snow, could not see whether one was coming or not; that he then proceeded, his horses on a trot, without any further attempt to discover whether he could cross the track without danger, until he reached the track, and was struck by the train. The jury would have been authorized to discredit the statement that he stopped at all, or that he made any effort whatever to discover whether he could safely cross, because other testimony indicated that the snow storm was not thick enough to have prevented him from seeing the train if he had looked for it at the point where he says he did; and the jury were not bound to accept his testimony, even though uncontradicted, as to any fact militating against his own prudence. A jury may properly reject any uncorroborated statement of a party to the action, even though there is no controverted testimony. Elwood v. Telegraph Co., 45 N. Y. 549; Dean v. Railway Co., 119 N. Y. 540, 23 N. E. 1054. If he did stop and look and listen, he was not excused from making any further attempt to discover whether he could safely cross. According to his own testimony, at that time it was unavailing for him to look, because the snow did not permit him to see. If he had looked and listened again, stopping or not, when nearer the crossing, in all probability he could have seen the approaching train. If this is so, his omission to look again was negligence. The law imposed upon him the obligation of both looking and listening, and required him to avail himself of all his faculties for self-protection. The rule of the adjudged cases is almost universally expressed in the proposition that a person about to cross a railroad track, whether upon a public highway or elsewhere, is bound "to listen and to look." As expressed by this court in Railroad Co. v. Blessing's Adm'r, 35 U. S. App. 208, 14 C. C. A. 396, and 67 Fed. 280, the rule is that a person "who is about to cross a railroad track is bound to listen and look in order to avoid danger; and if he fails to do so, or if, doing so, and seeing the danger, he persists in the attempt, he is guilty of negligence that will defeat any recovery if he is injured." He does not relieve himself from the imputation of negligence by looking when he cannot see, and omitting to look again when he could see, and avoid danger. In his instructions the trial judge did not give the jury any definition of contributory negligence beyond the statement that it consisted in the omission to use the care of a prudent man. We think the defendant was entitled to the benefit of a specific instruction defining the rule of con-

Digitized by Google

tributory negligence applicable to the case of a person about to cross a railway track. In view of the instructions given and those which were refused, the jury were at liberty to adopt their own standard of prudent conduct, and accept one less rigorous than that adopted by the courts. The first of the requests refused presented the general rule which should have been given to the jury for a guide. The second presented a rule specifically applicable to a state of facts which they would have been warranted in finding established by the evidence.

For these reasons we think the judgment should be reversed, and it is ordered accordingly.

(78 Fed. 797.)

UNITED STATES v. EINSTEIN et al.

(Circuit Court of Appeals, Second Circuit. February 23, 1897.)

1. CUSTOMS DUTIES—CLASSIFICATION—EMBROIDERIES—"DOTTED SWISSES."
"Dotted Swisses," being white, bleached, woven, cotton fabrics in the piece, embroidered after leaving the loom by an additional process of manufacture, though not known in commerce as "embroideries," are dutiable as articles embroidered, under paragraph 276, Act Aug. 28, 1894, and not under the countable clauses of the cotton schedule.

2. SAME.
The provision in paragraph 257, Act Aug. 28, 1894, that "cotton cloth," as used in the preceding paragraphs, shall include "all woven fabrics of cotton in the piece, whether figured, fancy, or plain," etc., does not apply to embroidered cotton cloth, which was not embroidered in the loom.

Appeal from the Circuit Court of the United States for the Southern District of New York.

James T. Van Rensselaer, Asst. U. S. Atty.
W. Wickham Smith, for the importers.

Before WALLACE, LACOMBE, and SHIPMAN, Circuit Judges.

SHIPMAN, Circuit Judge. The firm of Einstein, Wolff & Co. imported, in September, 1894, into the port of New York, embroidered cotton cloth in the piece, known as "dotted Swisses," which were returned by the local appraiser as "cotton embroidery," and duty was assessed thereon by the collector at 50 per cent. ad valorem under the provisions of paragraph 276 of the tariff act of August 28, 1894. So much of the paragraph as relates to the subject is as follows:

"276. Laces, * * * embroideries, * * * and articles embroidered by hand or machinery, * * * composed of flax, jute, cotton or other vegetable fiber, or of which these substances, or either of them, or a mixture of any of them is the component material of chief value, not specially provided for in this act, fifty per centum ad valorem."

The importers protested against the assessment upon the ground that the goods were dutiable under the provisions of paragraph 252–256, inclusive, in the schedule relating to cotton manufactures,

Digitized by Google

of the same act, according to the number of threads to the square inch, the number of square yards to the pound, and the value per square yard. These paragraphs are generally known as the "Countable Clauses." Paragraph 254 is the one applicable to the number of countable threads in the merchandise in question. The decision of the collector was affirmed by the board of general appraisers, but their decision was reversed by the circuit court, which held that the merchandise was dutiable as cotton cloth, under the provisions of paragraph 254. The merchandise consisted of white, bleached, woven cotton fabrics in the piece, and contained between 100 and 150 threads per square inch. They were not known in commerce as "embroideries," but were embroidered by an additional process of manufacture after they left the loom. At and before the date of the act of August 27, 1894, there were known, and dealt in the trade and commerce of this country, figured woven fabrics of cotton in the piece and fancy woven fabrics of cotton in the piece, the figures or fancy designs on which were made by the shuttle in the process of weaving the cloth, and which did not exist as plain cloth before such figures or fancy effects were made. This fact, which came into the case by stipulation, is important, in view of the new statutory definition of "cotton cloth" contained in paragraph 257 of the act of August 28, 1894, which is as follows:

"257. The term 'cotton cloth,' or 'cloth,' wherever used in the foregoing paragraphs of this schedule, shall be held to include all woven fabrics of cotton in the piece, whether figured, fancy, or plain, not specially provided for in this act, the warp and filling threads of which can be counted by unraveling or other practicable means."

The merchandise is concededly woven cotton cloth in the piece, embroidered after it left the loom, and is an embroidered "article." Junge v. Hedden, 146 U. S. 233, 13 Sup. Ct. 88. The question whether it is dutiable as an article embroidered composed of cotton, or as cotton cloth, as defined in paragraph 257, depends upon the meaning of the definition. The importers insist that it means woven cotton cloth in the piece, plain, or figured or fancy, however and by whatever means the ornamentation is made. The government insists that it means woven cloth which is, in the weaving, either figured, fancy, or plain, and that this construction is called for by the history and object of the new provision. The "countable clauses" in regard to cotton cloth came into the tariff acts in 1883, and have been construed by the supreme court in Newman v. Arthur, 109 U. S. 132, 3 Sup. Ct. 88, and in Hedden v. Robertson, 151 U. S. 520, 14 Sup. Ct. 434. Each case related to the effect which figures and designs, which were made in the weaving, had upon the dutiable character of the cloth. In the latter case, "the goods in question were called 'Madras mull,' and consisted of woven cotton cloth, the groundwork of which was uniform, and upon which were figures or patterns woven contemporaneously with the weaving of the fabric. These figures or patterns were woven into the groundwork by means of a machine called a 'Jacquard attachment.'" The question was whether the "Madras mulls" should be classified under the "countable" provisions, or as "manufactures of cotton not specially enumerated or provided for."

Digitized by Google

As they were not embroidered, the paragraph in regard to embroidered articles had no part in the case. The supreme court held that, although the figures were profusely scattered over the groundwork, so that the number of square threads differed in different parts of the fabric, yet that the ornamentation, which was woven into it, did "not change its character as cotton cloth, subject to the countable clause of the statute." The case was decided February 5, 1894, and overruled a previous decision of the circuit court, which was made in October, 1889. 40 Fed. 322. In the preparation of the new tariff of 1894, it is exceedingly probable that the definition of "cotton cloth" was introduced for the purpose of removing any vagueness in the former paragraphs in regard to the character of woven cloth. But in determining whether the words "figured" and "fancy" were intended to include an embroidered cloth which was not embroidered in the loom, reference must also be had to the embroidery paragraph, where embroidered articles of cotton were separately classified. The words, "not otherwise provided for in this act," are contained in each of the paragraphs under consideration, and are therefore not important in this case. We have, then, woven cotton cloth, whether figured, fancy, or plain, of which the threads can be counted, in one paragraph, and in another, embroidered cloth of cotton. It seems most reasonable that neither paragraph was intended to include the goods which had been classified in the other, and that the intent in paragraph 257 was only to describe as "woven cotton cloth" that which is plain, figured, or fancifully woven. The embroidery paragraph, 373 of the tariff act of 1890, was very like the corresponding paragraph 276 of the act of 1894, but contained the following proviso, which is omitted in the later act:

"Provided, that articles of wearing apparel and textile fabrics, when embroidered by hand or machinery, and whether specially or otherwise provided for in this act, shall not pay a less rate of duty than that fixed by the respective paragraphs and schedules of this act upon embroideries of the materials of which they are respectively composed."

The importers regard the omission of this proviso as signifying that textile fabrics of embroidered cotton shall not pay the duty upon embroidered articles, but shall be classified as cotton cloth. This proviso was for the purpose of making it certain that no embroidered article of wearing apparel, or embroidered textile fabric, however named or provided for in the act, should escape an embroidery duty. The act of 1894 omitted this proviso, and therefore an embroidered article of wearing apparel, or an embroidered fabric, is not compelled to pay an embroidery duty, if it is specially or otherwise provided for elsewhere. This omission by no means decides the present question, which is whether an embroidered piece of cotton cloth is or is not included in the cotton-cloth paragraphs. The circuit court thought that the question was governed by the language of the supreme court in Hedden v. Robertson, supra. As has been said, that case did not touch the embroidery provisions, the controversy being whether a woven cotton cloth in which figures were woven should pay a duty as cotton cloth, or under the general provision in regard to manufactures of cotton not otherwise provided for.

Digitized by Google

The general language in that opinion related to a controversy which is different from the one in this case. The decision of the circuit court is reversed.

(78 Fed. 799.)

UNITED STATES v. IRWIN et al.

(Circuit Court of Appeals, Second Circuit. February 23, 1897.)

CUSTOMS DUTIES—CLASSIFICATION—SHOTGUNS—IMPORTATIONS IN PARTS.

Gun barrels and gun stocks, with locks, etc., constituting all the parts of complete breech-loading shotguns, and so adapted to each other in the process of manufacture as to be made into complete shotguns by inserting the barrels into the stocks, are dutiable, when shipped to the same person, on the same vessel, under the tariff act of 1890, as shotguns, and not as manufactures of metal not specially provided for, though the barrels and stocks are separately packed and invoiced. U. S. v. Schoverling, 13 Sup. Ct. 24, 146 U. S. 76, distinguished.

Appeal from the Circuit Court of the United States for the Southern District of New York.

Wallace Macfarlane, U. S. Atty., and Henry C. Platt, Asst. U. S. Atty., for appellant.

Comstock & Brown, for appellees.

Before WALLACE, LACOMBE, and SHIPMAN, Circuit Judges.

WALLACE, Circuit Judge. This is an appeal from an adjudication by the circuit court affirming the decision of the board of general appraisers, and reversing that of the collector of the port of New York in assessing duty upon certain importations of merchandise made by various entries during the years 1891 and 1892. The merchandise consisted of parts of breech-loading shotguns, and was classified and assessed for duty by the collector under that provision of the tariff act of October 1, 1890, subjecting to a specific and also to an ad valorem duty "all double-barrelled, sporting, breech-loading shotguns." The importers protested against the classification and assessment upon the ground that the articles of merchandise were not breech-loading shotguns but were only parts thereof, and were dutiable as manufactures wholly or in part of metal, not specially provided for. The board of general appraisers found that the merchandise consisted of parts of incomplete firearms, and that there was no evidence that they were ever assembled or brought together as entireties before importation; that metal was the component material of chief value in the gun stocks, as well as in the barrels,—and the board decided that the merchandise should have been assessed for duty under the metal provision. Upon the appeal by the government from that decision to the circuit court, further evidence was introduced. That evidence, together with such as was before the board of general appraisers, shows that many entries comprise gun barrels and gun stocks coincident in number, shipped for the importer on the same steamer, under sep-

Digitized by Google

arate invoices; the barrels being in cases by themselves, and invoiced as gun barrels, and the stocks being in cases by themselves, and invoiced as gun stocks. Thus, in the entry of August 1, 1891, there were 3 cases each containing 50 gun stocks, and 3 cases each containing 50 pairs of gun barrels. The stocks were equipped with the locks, the action, the trigger plates, and all the parts requisite to constitute a complete breech-loading shotgun upon inserting the barrels. The barrels and the stocks were marked with identifying numbers, so that the appropriate barrels could be selected for the appropriate stocks, respectively, and the two parts be united into a complete gun, merely by inserting the barrels into the stocks. There were other entries in which the barrels and stocks were shipped in separate cases, and invoiced separately, but were not coincident in number; in some entries there being more barrels than stocks, and in others more stocks than barrels. The evidence taken in the circuit court upon the appeal shows—what was not shown before the board of general appraisers—that in the manufacture of guns the barrels and stocks are made separately, and, at various stages before completion, are assembled together and accurately adjusted. It is a matter of common knowledge that the barrels and stocks of breech-loading shotguns, when the guns are not in use, are detachable; and the ordinary sportsman's gun case is so constructed that the barrels must be detached when the gun is put into the case.

Upon the evidence in the record, we entertain no doubt that the importations in controversy were breech-loading shotguns, which before exportation were in a completed condition, ready for the market or for the sportsman's use, in number equal to that of the stocks or the barrels, but that the parts were detached, shipped in separate cases, and invoiced separately, to enable the importer to enter them as invoiced, escape the payment of the duty upon guns, and, after importation, reassemble the parts. We are to consider to what extent this was a legitimate or a successful effort to avoid the payment of the higher duties.

It is a well-settled doctrine that intent is not an element in determining the proper classification of imported articles, and that merchants are at liberty so to manufacture and so to import their goods as to subject them to the lowest possible duties under the tariff laws.

In Merritt v. Welsh, 104 U. S. 694, the tariff act imposed a duty upon sugars, the rate of which was graduated according to their color, and the question was whether sugars which had been artificially colored during the process of manufacture so as to impart to them a color characteristic of a lower grade of sugars were dutiable according to their actual color or according to the normal color of sugars of that grade. The court held that the sugars were dutiable according to their actual color. After observing that congress had fixed the dutiable grade of sugars by a standard of colors which originally supplied a valid test of their real grade, and that in the new processes of manufacture the standard had come to be a precarious one, the court said:

Digitized by Google

"It may be that our tariff of duties is evaded by giving to sugars, in the process of manufacture, a low grade of color. If this be so, it is no more than every manufacturer does, namely, so to manufacture his goods as to avoid the burden of high duties, provided he can do it without injuring their marketability, or injuring it less than the duties involved. So long as no deception is practiced, so long as the goods are truly invoiced and freely and honestly exposed to the officers of customs for their examination, no fraud is committed, no penalty is incurred."

In Seeberger v. Farwell, 139 U. S. 608, 11 Sup. Ct. 650, and in Magone v. Luckemeyer, 139 U. S. 612, 11 Sup. Ct. 651, the tariff act imposed a duty upon dress goods composed in part of wool, and a higher duty upon goods composed wholly of wool; and the question was whether woolen goods, into which, during the process of manufacture, a small percentage of cotton threads had been introduced for the purpose of securing their classification for duty as goods composed in part of wool, were subject to that duty, or to the duty upon woolen goods. The court held that the goods were subject only to the lower duty and adopted the view—

"That manufacturers and importers had the right to adjust themselves to the foregoing clause of the tariff, and to manufacture the goods with only a small percentage of cotton, for the purpose of making them dutiable at the lower rate," and that, "although the goods in question contained so small an amount of cotton that the ordinary dealer in them and the ordinary examiner would not detect the cotton without a close and careful examination, that did not change the legal right of the plaintiffs to bring their goods within the operation of the clause involved by the admixture of even a small percentage of cotton, if they could do so."

As was declared in Worthington v. Robbins, 139 U. S. 341, 11 Sup. Ct. 583:

"In order to produce uniformity in the imposition of duties, the dutiable classification of articles imported must be ascertained by an examination of the imported article itself, in the condition in which it is imported."

Applying these principles to the present case, we cannot escape the conclusion that if the articles in controversy were not shotguns, in the condition in which they were imported, they were not dutiable as such, notwithstanding they had been shotguns previously, and could readily be again transformed into shotguns, and notwithstanding they had been taken apart and imported in fragments merely for the purpose of escaping the duty upon shotguns. This conclusion is enforced by the case of U. S. v. Schoverling, 146 U. S. 76, 13 Sup. Ct. 24. In that case gun stocks with mountings complete, ready for attachment to barrels, were imported. The importing firm had arranged with another firm to import the barrels. It was held that the articles were not subject to duty as shotguns. The court said:

"The intent of the importers to put the gun stocks with barrels separately imported, so as to make here completed guns for sale, cannot affect the rate of duty on the gun stocks as a separate importation."

The court added:

"The dutiable classification of the gun stocks imported must be ascertained by an examination of them in the condition in which they are imported."

In the Schoverling Case it did not affirmatively appear that the stocks and barrels had been assembled together previous to importation, and in this respect that case differs from the present

Digitized by Google

case. But surely it cannot be that the physical act of attaching and then detaching the stocks and barrels before exportation can change the dutiable character of the goods. Many articles made by machinery are made in separate parts, and are never put together as an entirety until it becomes desirable to use them. Nevertheless they are completed articles, in a commercial sense, and for all practical purposes. A breech-loading shotgun is a complete article in the sportsman's hands when he has detached the barrels for a temporary purpose. It is no less one notwithstanding the parts have never been assembled, provided they have been made so as to be attachable and detachable without requiring any adjustment. The Schoverling Case does not decide that when the stocks and corresponding barrels are imported together, shipped by the same vessel for the same importer, and entered at the customhouse at the same time, duty is to be assessed upon the fragmentary parts. Under such circumstances, we think the parts are dutiable as a whole. The form of invoice which the importer may adopt, or the mode of packing which he may adopt, are immaterial matters. If he prefers to send the barrels in one case and the stocks in another, he is at liberty to do so, but the fact that they are packed in separate cases cannot affect their dutiable character. Machines and many cumbrous articles are frequently transported with the sections or parts in different packings. If the importers had procured a policy of insurance against loss by fire or the perils of the sea, describing their goods as "shotguns on board the steamship Obdam," the policy would have covered the stocks and barrels in separate cases.

When the barrels and stocks are shipped upon different vessels, it may happen that they can never be assembled together again as a complete gun. The dangers of navigation and other contingencies may intervene to prevent it. It is not for the customs officers, in imposing duties, to speculate upon these contingencies. They must take the articles as they find them to be upon examination. If they cannot, by assembling them together, discover that they are really a different thing, it is their duty to classify them as the article they purport to be.

Undoubtedly, with this understanding of the law, importers will be able to escape the duty upon shotguns by sending the stocks and barrels in different vessels, and entering them at different times. The remedy, however, is with congress; and it may be that such a practice upon the part of importers would expose them to the penalty of a condemnation of their merchandise under that statute of congress relating to entries of merchandise by means of any "false or fraudulent practice or appliance."

These conclusions lead to a reversal of the decision of the court below.

Digitized by Google

(78 Fed. 824.)

THE F. W. WHEELER.

THE F. W. WHEELER v. CHURCHILL et al.

(Circuit Court of Appeals, Sixth Circuit. February 2, 1897.)

No. 424.

1. COLLISION—STEAMER AGROUND—SIGNALS.
   If a steamer which, with the barge in her tow, is aground in a channel, and unable to move, shows the lights prescribed for vessels under way, and, upon the approach of another vessel, responds to signals in a way to indicate that she will keep out of the other vessel's way, and gives no warning of the danger of the actual situation, she is in fault, and responsible for damage ensuing.
2. SAME—STEAMER WITH TOW—SHEER BY TOW.
   The steamer W., with a barge, A., in tow, was proceeding, at night, up a narrow channel, and met the steamer C., coming down the channel, also with a tow. The steamers were approaching nearly head on, at a combined speed of about 10 miles an hour. At about the time they met, the barge A. took a sharp sheer across the channel and across the course of the C. The W. did not stop nor throw off her tow line when the sheer began, nor until the C. had about passed her. *Held*, that she was in fault in not doing so, and was responsible for the ensuing collision between the A. and the C. and her tow.
3. SAME—FAULT OF TOW.
   Held, further, that inasmuch as the A., if properly manned, equipped, and navigated, would have taken no such sheer into the course of the C., she would be held, in the absence of explanation, to be in fault, and also liable for the collision.
4. SAME—ERROR IN EXTREMIS.
   Held, further, that it was at most an error in extremis (for which she was not responsible) for the C., instead of stopping or reversing, while coming down with a current with a tow behind her, to put on steam, in an effort to avoid collision with the A. by crossing her bows.

Appeal from the District Court of the United States for the Eastern District of Michigan.

The steam barge Porter Chamberlain and the barge Comstock, while in tow of the former, came in collision with the barge Ashland, while in tow of the steamer Wheeler. This collision occurred in Lake St. Clair, in what is known as the Grosse Pointe Channel or Cut. That channel is about 1½ miles long, and about 900 feet wide. It is marked on the upper end by a black stake and the Grosse Pointe Lightship, and at its lower end by a black stake and a spile or tripod light, as it is sometimes called. The collision occurred on November 13, 1891, at about 4:30 a. m. The night was dark, but clear. The Chamberlain was coming down the lake, and had in tow three lumber-laden barges, which were held by lines about 450 feet in length between each vessel. The Comstock was the first in the tow, and the only one of the tow which received injury. The Chamberlain was about 134 feet in length, and drew about 11 feet 6 inches, and was lumber laden. The Wheeler is a large steamer, 285 feet in length, was loaded with coal, and was drawing 14 feet and 10 or 11 inches. The Ashland was a large four-masted barge, 218 feet long, and was drawing about 15 feet. She was in tow of the Wheeler by a line about 900 feet long. The Wheeler and her consort were proceeding up the lake. At a point between the tripod light and the Grosse Pointe Lightship, the Chamberlain came into collision with the Ashland, and in a moment later the Comstock also collided with the same vessel. When about 2,000 feet from the Wheeler, and upon a course "nearly head on" with the Wheeler, the Chamberlain sounded a signal of one blast, to which the Wheeler replied with one blast. The Chamberlain was then in charge of her first mate who was on deck at the time of this exchange of signals. The wheelsman was at the wheel, and the watchman was with the mate on the forecastle deck. Her

Digitized by Google

speed was between five and six miles per hour. The Wheeler was coming up the middle of the channel at a speed, as claimed by the libelants, of from three to five miles per hour. She was exhibiting two bright headlights, indicating she had a tow, and was showing to the Chamberlain both her side lights. The libelants claim that the Ashland was apparently following her steamer, and that both of her side lights were visible to the Chamberlain, and continued to show until the bows of the passing steamers were lapping, when it was noticed that the red light of the Ashland was shut out, and that her green light was sheering to the westward across the course of the Chamberlain. The steamers passed port to port about 100 feet apart, and, as they passed, a colloquy occurred between the mate of the Chamberlain, who was still on watch, and the master of the Wheeler, who was on his deck. Just what was said, and who first hailed, are matters of dispute. For the libelants it is said that the mate of the Chamberlain, referring to the green light sheering across his course, asked, "Is that your consort?" to which the officer on the Wheeler's deck replied, "Yes; look out for her." The mate then asked, "Have you still got hold of him?" and the reply was, "Yes." This mate and the other witnesses for libelants from the deck of the Chamberlain say that, as they passed the Wheeler, they could see the towline of the Wheeler, and that it was taut, and that the Wheeler was forging ahead, and pulling on the line. These witnesses also say that, when the Ashland's red light was shut out, the wheel of the Chamberlain was immediately put hard a-port. Just as this was done, the captain of the Chamberlain, aroused by the colloquy between his mate and the captain of the Wheeler, came on deck in his night dress, and took charge of her navigation. Four or five sharp blasts of the whistle were sounded as a signal to the engineer to open up his engine, with the hope of avoiding a collision under a wheel still harder a-port. The effort was in vain. According to the libelants' witnesses, the Ashland continued to approach under a sheer to the westward, at a speed of from three to five miles per hour, right across the course of the Chamberlain, and struck the port side of the Chamberlain abaft of midships, her bowsprit sweeping off the Chamberlain's after-cabin, heavy iron davits and yawl. After striking the Chamberlain, the same witnesses say, she continued her sheer, and ran into the Comstock, which was following the Chamberlain under a hard a-port wheel, striking the Comstock on her port bow, and doing some damage.

For the respondents below, who are appellants here, quite another story is told. Their witnesses, being the men and officers from the deck of the Wheeler and her consort, say that the Chamberlain, when approaching the Wheeler, did blow one blast, and that this was replied to by one blast. But they say that, when this agreement to pass port to port was made, both the Wheeler and Ashland were aground; that the Ashland was then aground some four or five hundred feet off the port quarter of the Wheeler, and was showing only her green light to the Chamberlain. This position would place the Ashland westward of both the Wheeler and the Chamberlain, and upon the westward side of the channel, the Wheeler being aground about the middle of the channel. They also say that the towline of the Wheeler was 900 feet in length, but was then slack, and on the bottom, though it had not been thrown off or cut. What occurred when the Chamberlain and the Wheeler were passing, as detailed by Capt. Ivor, of the Wheeler, was this: He says: "I sung out, 'Where are you going there?' and he says, 'Is that him showing the green light?' and I says, 'Yes,' and he says, 'Have you got his towline?' and I said, 'Yes, but I shall let go of it. Run aft, and let go the towline.' And the mate started on the run, and went aft, and let it go,—let the towline go." He then says that the Chamberlain kept "right along down on their course until they got abreast of the boiler house of the Wheeler. Then I noticed him sheer off to the westward, heard him blow his whistle, heard his exhaust working strong, as though his engine was working stronger. He bore off to the westward, and ran across the Ashland's bow, and the next thing I heard was the crash," etc. He says that, when he gave the order to let go the towline, he also stopped his engines. Touching the positions of these different crafts, this witness says that, when the Chamberlain gave one blast, she was a little below the lightship, and the Wheeler some 600 or 700 feet above the tripod. He says the Wheeler was not going ahead, but that his engine was working, trying to work off the bottom; and that, before the whistles were sounded, the green light of the Ashland was

Digitized by Google

showing, "just by the port quarter of the Wheeler." He was then asked if there was any change in the bearing of the Ashland's green light after the exchange of signals. He answered: "There was." Question: "What was it?" Answer: "Well, it opened out a little more from me, from my quarter." When asked if, when the Chamberlain was passing the Wheeler, the latter was moving, he said she was not. He also says the Ashland was not moving. The witnesses from the Ashland all concur in saying that, in their opinion, the Ashland was aground on the bank on the western side of the channel when passing signals were exchanged, and that she remained fast at the same spot until the next morning, and until pulled off by a tug. To account for this position off the port quarter of the Wheeler, the respondents' witnesses say that just when entering the lower end of the Grosse Pointe Channel, and when about abreast the tripod light, the Wheeler went aground; that she was at the time running under a check. To prevent being run into by the Ashland, an alarm whistle was sounded, and the Ashland ran up on the towline until her stem was about abreast the starboard quarter of the Wheeler. The master of the Ashland says that, while in this position, the whaleback steamer Bartlett, which was coming up the lake with a tow, passed on his starboard side, so close as to strike the Ashland a very severe blow on her starboard bow; that the immediate effect of this blow was to start the Ashland swinging westward, and that she continued to so swing until she fetched up aground off the Wheeler's port quarter some four or five hundred feet; and that she was fast aground when first the Chamberlain and then the Comstock ran into her, and remained aground on the same spot until pulled off the next morning. He further says he had been aground in the same position for some five or six minutes when the Chamberlain ran into him, and was so aground when the Wheeler and Chamberlain exchanged passing signals. Respondents' witnesses say that the Wheeler remained aground near the tripod light until after she was passed by the Bartlett and her tow, but pulled off and slowly forged ahead for about 100 feet, when she again went aground, and was fast aground, and not moving, when she exchanged signals with the Chamberlain, and when passed by the latter vessel, though her engines were working in an effort to get off, which she did not succeed in doing until the collision; that, from the time the Ashland ran up on her towline at the tripod light, she had not pulled on the towline; and that it was on the bottom when the Chamberlain passed.

The principal faults charged against the Wheeler by the libel were that she did not stop and check, as she should have done, when the Ashland took her sheer. The faults principally charged against the Ashland were, that she did not follow her steamer, but carelessly and negligently sheered off to port, and was negligent in not casting off her line to the Wheeler when she found she was sheering across the course of the Chamberlain. The district court held that, on the theory of the respondents, the Wheeler was guilty of a fault in accepting a passing signal when unable to control her own movements or those of her consort, and in not sounding an alarm to the Chamberlain to put her on guard against the known dangerous situation of both herself and her consort. But that court also held on the evidence that neither the Wheeler nor the Ashland was aground when the agreement to pass port to port was established, and that the Wheeler did not seasonably notice the sheer taken by the Ashland. The Ashland was held in fault for taking the sheer she did, and in failing to follow her steamer. The court further held that neither the Chamberlain nor her consort, the Comstock, were in fault, and assessed their damages against both the Wheeler and the Ashland. From this decree the respondents have perfected this appeal.

Frank H. Canfield, for appellants.
Wm. V. Moore, for appellees.

Before TAFT and LURTON, Circuit Judges, and SAGE, District Judge.

LURTON, Circuit Judge, after stating the facts as above, delivered the opinion of the court.

Judge Swan, who heard this case in the district court, was of opinion that the Wheeler was to be condemned, "whether she was

Digitized by Google

under command, and making headway through the water, as claimed by the libelants, or whether she and her consort were practically aground, as contended by the defense." "If," said the learned and careful judge, "the Wheeler was aground when she exchanged signals with the Porter Chamberlain, it was clearly a fault on her part to accept that signal, and give her answer to assure the Chamberlain that she was under command." We are strongly disposed to agree to that conclusion upon the circumstances of this case. It is true that the district judge seems to base this conclusion upon the theory that the act of March 3, 1885 (23 Stat. 438), adopting "the revised international regulations for preventing collisions at sea," was operative on the great inland lakes and connecting waters. In this he erred inasmuch as section 2 of article 27 repeals all laws in conflict with that act "except as to the navigation of such vessels within the harbors, lakes, and inland waters of the United States." This exception operated to leave the rules of navigation found in section 4233 of the Revised Statutes in force as to the great inland lakes and rivers. The construction placed by the supreme court upon the term "high sea," in the case of U. S. v. Rodgers, 150 U. S. 249, 14 Sup. Ct. 109, has no application in the determination of the question as to whether the act of 1885 is operative upon the inland lakes, they being expressly excepted therefrom by the clause in the repealing article cited. This is the view taken by this court in the case of The North Star, 22 U. S. App. 242–250, 10 C. C. A. 262, and 62 Fed. 71. This construction of the act of 1885 is strengthened, and is made more evident by an examination of the subsequent acts of August 19, 1890, of May 28, 1894, of August 13, 1894, and of June 10, 1896. The rules of navigation found in section 4233 of the Revised Statutes furnish, therefore, the rules under which this case must be tried.

What was the duty of the Wheeler if the situation was that claimed for respondents when the Chamberlain was seen to be coming down this narrow channel, on a course so nearly parallel to that of the Wheeler, as inevitably to result in a collision, if persisted in, with the Ashland, then aground, as claimed by respondents, off her port quarter? The Wheeler, when signaled, was carrying at her masthead two bright white masthead lights, which are the lights prescribed by rule 4 for steam vessels "towing other vessels." So she was showing on her starboard side a green light, and upon her port side a red light, as prescribed by rules 4 and 5, for vessels "when under way." These rules are in terms for vessels "when under way," and their display implied that both the Wheeler and her consort were "under way," and this the approaching Chamberlain had a right to understand. When the Chamberlain signaled the Wheeler, the latter was then showing two white vertical lights at her masthead, and her two proper side lights, both indicating that she was "under way," and was "towing" a vessel behind. The single blast was a proposition to pass port to port, and was a proper signal, for these vessels were "meeting head on" or "nearly end on." They were meeting in a narrow

Digitized by Google

channel, where they must pass on nearly parallel courses,—courses so close as that each was showing to the other both side lights. They were on courses not exceeding one-half point apart, and were therefore "meeting head on," or "nearly end on," so as to involve risk of collision, within the meaning of rule 18 of section 4233. The Nichols, 7 Wall. 656–665.

Rule 1 of the pilot rules, adopted by the supervising inspectors, on page 53 of the general rules and regulations prescribed by the board of supervising inspectors of steam vessels, as amended January, 1891, provides as follows:

"When steamers are approaching each other 'head and head,' or nearly so, it shall be the duty of each steamer to pass to the right, or port side, of the other; the pilot of either steamer may be first in determining to pursue this course, and thereupon shall give, as a signal of his intention, one short and distinct blast of his steam whistle, which the pilot of the other steamer shall answer promptly by a similar blast of his steam whistle and thereupon such steamers shall pass to the right, or port side of each other. But if the course of such steamers is so far on the starboard of each other as not to be considered by pilots as meeting 'head and head,' or nearly so, the pilot so first deciding shall immediately give two short and distinct blasts of his steam whistle, which the pilot of the other steamer shall answer promptly by two similar blasts of his steam whistle, and they shall pass to the left, or on the starboard side of each other."

The establishment of an agreement to pass port to port, which was clearly the proper proposition under rule 18, and under the supervising inspectors' rule above set out, for the Chamberlain to propose, placed each vessel under the equal obligation of keeping to the port of the other. The Chamberlain was under no higher obligation to go to the westward of the Wheeler far enough to pass her at a safe distance than was the Wheeler to go to the eastward far enough to pass the Chamberlain safely. The obligation of the Wheeler was also the obligation of her tow, and her agreement implied that her tow should likewise do all that was reasonable to enable the Chamberlain and her tow to pass, port to port. We think the acceptance of the signal was as if the Wheeler had said: "I am directing my course to starboard, am under way, and am in control of my own movements, and those of my tow."

Rule 24 provides that:

"In construing and obeying these rules, due regard must be had to all dangers of navigation, and to any special circumstances which may exist in any particular case rendering a departure from them necessary in order to avoid immediate danger."

The inability of the Wheeler to control her movements, or those of her consort, which had sheered across the course of the vessel coming down, imposed on the master of the Wheeler the duty of warning the approaching vessel of the danger of the situation. He had no right by lights and signals to give the Chamberlain to understand that her course was clear to pass port to port without greatly changing a course which was manifestly so "end on" or "head and head" with himself as to certainly bring him in collision with his helpless consort off his port quarter,—a collision which neither the Wheeler nor the Ashland could avoid by any movement of their own. Special circumstances existed, known to the Wheeler, and not known to the Chamberlain, which required

Digitized by Google

prompt attention, and warning should have been given to the Chamberlain that she might adopt proper precautions. The acceptance of the signal given by the Chamberlain was clearly misleading, for it gave her the right to understand that she could pass safely on the port side of the Wheeler, and that her consort was under control, and would be no hindrance if she passed as proposed. The suggestion of counsel that the Wheeler was compelled by the rules of navigation to reply to the single blast whistle of the Chamberlain by a like signal, regardless of her inability to control her own movements or those of her tow, and regardless of the fact that her tow was then lying aground across the course of the approaching steamer, has no foundation. The application of the rule requiring vessels approaching end on or nearly end on to pass port to port is one which must be modified by rule 24, requiring regard to be given to all special circumstances and dangers of navigation. It has been more than once said that:

"The question of culpable negligence is not determinable absolutely by any rule of navigation; that these rules are not inflexible, and a vessel which adheres to them in form may still be at the same time guilty of a tortious injury to another which fails to observe them." The Pilot, 19 Fed. Cas. 691; The Santa Claus, Fed. Cas. No. 12,327.

In the case first cited, Justice McLean further said:

"It is eminently proper that a strict observance of any of these regulations should be avoided when there is a plain risk in adhering to them, and it is entirely in the power of either vessel to escape a collision by departure from the methods provided by the rules." 19 Fed. Cas. 693.

It is no answer to say that the Wheeler had a right to presume that the Chamberlain meant to go beyond the western bounds of the deep water channel. That well-marked 16-foot channel was the ordinary course pursued by vessels in passing down the lakes, even though drawing less water, and therefore able to traverse the shallower waters east and west of the dredged channel. The master of the Wheeler when he accepted the Chamberlain's signal did not know the draught of the Chamberlain nor of her tow. According to the claims now made for him, he knew the channel was obstructed on his port side by his grounded consort, and yet by his reply signal he in effect said: "I am in control of the movements of my own vessel and of my consort, and am directing my course and that of my tow to the starboard, so that you may safely pass me on my port side, as you propose, provided you direct your course to starboard far enough to leave me at a safe distance on your port side." If the Chamberlain knew, or ought to have known, that the Wheeler and her tow were fast aground, much would be expected of her in avoiding vessels so situated, and much less would be required of vessels so disabled or at anchor. The burden of proof in such a case would be upon the vessel in control of her movements. The John Adams, 1 Cliff. 404–413, Fed. Cas. No. 338; The Rockaway, 19 Fed. 449.

There were no circumstances to indicate to the Chamberlain that the Wheeler was fast or not under control until too late to avoid collision. That she was not given this notice was the fault of

Digitized by Google

the Wheeler. The duty of the Chamberlain under the circumstances was to provide for a sufficient margin to safely pass the Wheeler and her tow under the dangers of navigation known, or which ought to have been known under all the circumstances. She did pass safely on the port side of the Wheeler, and would have so passed the Ashland if the latter had followed her steamer, as she was bound to do. It is not a case where she failed to make allowance for contingencies which ought to have been provided against, as in the cases cited by counsel for respondents of The City of Springfield, 29 Fed. 923, and Wells v. Armstrong, Id. 217.

From this view of the rightful meaning of the signals displayed by the Wheeler, and of the agreement to pass port to port, it is not probable that the situation of the Wheeler and her consort was other than that indicated by her lights and signals. The improbability that an experienced and expert navigator would have invited the Chamberlain to continue on a course which would enable her to pass the Wheeler at a safe distance, but which, if followed, would inevitably bring her in collision with the Ashland, is so great as to lead us to doubt the reliability of the evidence relied upon to show that neither the Wheeler nor Ashland was under headway or control when signaled by the Chamberlain. The improbability of such a gross fault in navigation as the failure to give notice by alarm whistles of the danger of the situation claimed to exist by the respondents leads us to concur in the holding of the district court that the Ashland was not aground when signals were exchanged, and that the Wheeler was also under headway, though possibly her speed was retarded by the shallowness of the water. The story told by the witnesses for the libelants is much more probable than that we are asked to credit in order to exonerate the Wheeler and her consort. That the Wheeler did go aground about the time she entered the Grosse Pointe Channel is satisfactorily shown by the evidence of the master of the Bartlett, who was following behind the Wheeler, and who observed the Ashland run up on her towline until she was nearly abreast of the Wheeler, and off her starboard quarter. The evidence of the same very intelligent and disinterested witness indicates that the blow the Ashland received on her bow quarter was a comparatively light one, and had no immediate effect in turning her head to the westward, for he says he watched her until his entire tow had passed her, and she was showing only her red light, which clearly indicated that she was still heading eastward. The probability is that this running up on her towline continued until the Ashland lost her steerage way, sheered to port, and continued this sheer when the Wheeler again forged ahead, and began to pull on the towline. The probability, on all the facts and circumstances, is that this sheer to port had about straightened out the Ashland behind the Wheeler when the Chamberlain proposed to pass port to port, and that at that time she was showing both side lights to the Chamberlain. The sheer, however, continued, and was not broken until after she had collided with both the Chamberlain and the Comstock. That the Wheeler got under way after

Digitized by Google

she went aground near the tripod light, and was proceeding on her way when the Chamberlain passed her, is, in our judgment, established. That her speed was retarded by the shallowness of the water is likely, but that she was pulling on her towline, as testified to by the officers and men on the Chamberlain, we have little doubt. The effect of the forging ahead of the Wheeler was only to make matters worse. It gave impetus to the Ashland, and caused her to progress up the lake under a strong sheer to the westward, and pulled her more and more across the course of the Chamberlain. That the Ashland was not aground when the collision occurred, and that she continued her sheer until she afterwards went aground west of the channel, is strongly confirmed by the evidence of Capt. Glass of the schooner Dauntless. The Dauntless had been lying at anchor off Grosse Pointe for about 40 days, and was a considerable distance west of the channel, and in water only about 13 feet deep. He was on his schooner the night of this collision, but did not see it. He says, however, that early in the morning he observed the Ashland was aground within 100 or 150 feet of the Dauntless, but that the wreckage from the Chamberlain was fully 1,000 feet lower down the lake; that this wreckage was anchored by the heavy iron davits attached thereto, and, in his opinion, lay substantially where it had fallen from the Chamberlain, by reason of being so anchored. The distance between the place where the Bartlett passed the Ashland and where she was found the next morning must be fully one mile. Now, if she had nearly lost her steerage way when hit by the Bartlett, as testified to by both the master of the Bartlett and the master of the Ashland, and if it be also true that she did not have out her staysail nor any other canvas, it is hard to understand how she had made such headway unless she was towed by the Wheeler. Yet this progress up the channel was without sail, and against the current, and occurred within 15 or 20 minutes after the Bartlett passed up. The circumstances strongly indicate that the Wheeler was under way, and was pulling the Ashland, as claimed by libelants.

We need not further discuss the evidence. We agree with the finding of the district court that the circumstances of the collision are substantially as claimed by the libelants. The Wheeler must be condemned for not stopping when the sheer began, or in not throwing off the towline sooner. If she stopped or threw off the towline at all, it was only when the collision was inevitable. If she had closely watched the course of her tow, this collision might have been averted. The channel was narrow. A steamer with a tow was coming down. There was neither time nor room for maneuvering or speculating. The Ashland was 900 feet behind the stern of the Wheeler, and her course not so promptly observable from the deck of the Chamberlain as from that of the Wheeler. The Wheeler does not claim to have stopped her engine or to have thrown off the towline until the steamers had about passed. It was then too late. The collision was inevitable. The Chamberlain and Ashland were approaching each other at a com-

Digitized by Google

bined speed of probably 10 miles per hour. A little over a minute would bring them together. Indeed, it is not claimed for the Wheeler that she took any steps to throw off the towline or stop the progress of the Ashland until just as the steamers passed. The defense has been put on a wholly different ground,—one which we are constrained to hold is not supported. The Ashland was also grossly at fault. The story that she was swung to the westward solely by the blow of the Bartlett is overthrown by the facts stated by the captain of the Bartlett, namely, that, after he and his entire tow had passed the Ashland, she was still heading to the eastward, and showing only her red light. The theory that her sheer to the westward was due to the blow she sustained from the Bartlett, being thus overthrown by the evidence of a wholly disinterested and capable navigator, leaves its cause wholly unexplained. If properly manned, equipped, and navigated, she would have taken no such sheer. That sheer was the proximate cause of this collision. Such a sudden and improper change of course was a very plain violation of the rules of navigation, and the burden is upon the Ashland to explain its cause. Unless it was the result of inevitable accident, she must be condemned. That is not shown. The Olympia, 22 U. S. App. 69, 9 C. C. A. 393, and 61 Fed. 120.

Touching the charge that the Chamberlain was at fault in not stopping or reversing, but, instead thereof, putting her wheel hard a-port, and working her engine with all its power, in order to cross the bows of the Ashland, we quite agree with the district judge, who on this subject said:

"Under the circumstances, this must be regarded as a venial fault, if fault it was. It must be remembered that the Chamberlain was behind her tow of three vessels, all lumber laden, and was coming down with a current of perhaps 2 miles an hour. The combined speed of the meeting tows was probably 10 miles an hour, and, although the Ashland was about 800 feet astern of the Wheeler, her course, the proximity of the vessels, after she had shut out her red light, was such that it would have been impossible for the Chamberlain to have avoided her. The combined speed of these vessels would bring them together in about one minute,—too short a time to have enabled the Chamberlain to have averted the collision. If she had stopped and reversed, she would have hazarded collision with her own tow, which, having no motive power of their own, could not be expected to clear her, and would also have incurred the risk of fouling her towline with her screw as the tow ran up on the steamer; and, in all probability, a much more disastrous collision would have involved, not only the Chamberlain and the Ashland and the Comstock, but the Breton and the Gebhardt as well. The conditions which confronted the master of the Chamberlain when called upon to act in face of the danger threatened by the approach and the course of the Ashland are amply excusatory of any error of judgment or technical violation of the statutory rule that a 'vessel approaching another so as to involve risk of collision shall slacken her speed, or stop and reverse if necessary.' The Chamberlain had scarcely cleared the Wheeler when the Ashland's sheer was observed. In the short distance which separated these vessels, the only measure which promised safety was that taken by the Chamberlain. That it failed of its intended effect does not condemn its wisdom. At most, it was an error in extremis, made in the effort to avoid the greater casualty which any other course would, in all probability, have produced."

The error assigned in respect to an allowance for loss of one voyage while undergoing repairs is overruled. The evidence supports the decree in that regard. Decree affirmed, with costs.

Digitized by Google

(78 Fed. 837.)

OWENS v. HEIDBREDER.

(Circuit Court of Appeals, Fifth Circuit. January 26, 1897.)

No. 535.

ACTIONS AT LAW AND SUITS IN EQUITY—FEDERAL COURTS.

The distinction between actions at law and suits in equity in the United States courts is not one of form merely, but of vital substance, and a purely legal action cannot be converted into a suit in equity, or become entitled to be heard as such, by the answer of a defendant asserting equitable rights; but a defendant who has such rights, which he is entitled to enforce against the plaintiff, should resort to equity to arrest or stay the action at law.

In Error to the Circuit Court of the United States for the Northern District of Texas.

M. L. Morris and W. M. Crow, for plaintiff in error.

W. H. Clarke, for defendant in error.

Before PARDEE and McCORMICK, Circuit Judges, and MAXEY, District Judge.

McCORMICK, Circuit Judge. George L. Heidbreder, the defendant in error, brought on January 31, 1896, the Texas statutory action of trespass to try title against George W. Owens, the plaintiff in error, to try the title to the premises described in the pleadings, and for damages claimed. On January 13, 1894, the premises were the property of the Crystal Ice Company, and consisted of a lot of ground, with the proper structures thereon to constitute a plant for the manufacture of ice, for which purpose the plant had been operated by a former owner, but the operation had been discontinued for a time. To discharge an incumbrance on the property, and to put the plant again in operation, the Crystal Ice Company desired to borrow $6,000 on it, negotiated with the defendant in error, and obtained the money, giving therefor its coupon notes maturing at different dates, and a deed of trust on the premises to secure these notes. Default was made in the payment of the notes, and the trustee duly sold the property. The defendant in error purchased at the sale, and received his conveyance May 7, 1895. After January 13, 1894, the Crystal Ice Company procured materials and the labor of mechanics from the plaintiff in error and others in repairing its plant, and in making an inconsiderable addition to one of the structures, on the accounts for which unpaid balances were due in July, 1894. These were duly fixed as liens under the statute, by the respective parties. Suit thereon was entered in one of the state courts. Successive receivers were appointed in that suit. It proceeded to judgment foreclosing the liens, to satisfy which the property was duly sold by the receiver, purchased by the plaintiff in error, and delivered into his possession as such purchaser. The defendant in error was not a party to these proceedings. On May 28, 1896, the defendant below, the plaintiff in error here, filed this motion:

Digitized by Google

"Now comes defendant in the above entitled and numbered cause, and, referring to his first amended original answer filed herein on the 1st day of June, 1896, adopts same, and makes it a part of this motion, and shows to the court that there are issues to be submitted and determined in this cause that require that it should be transferred to the equity docket; wherefore defendant prays the court to transfer this cause to the equity docket, and that the plaintiff be enjoined from further prosecuting this suit on the law docket until all issues in equity have been fully settled and determined; and will ever pray."

The answer referred to in this motion presents (1) a general demurrer; (2) general denial; (3) plea of not guilty; after which the acquisition of the liens and the proceeding to enforce them and the result of that proceeding are set out in the answer. Then the answer concludes thus:

"Wherefore he says he has title to all said property and is entitled to the possession of the same, or, if he is not allowed to hold the lot of land, then he says he has title to the house and machinery on said premises, and is entitled to remove the same; or, if this relief is denied him, then he prays in the alternative that he has a prior and superior lien on said property to that of plaintiff, and that his said lien is still in full force and effect as against the plaintiff herein to the amount of said debt of $417.27, and his bid of $1,000 at his purchase under said foreclosure sale, with his interest on the same. All of which defendant is ready to verify and puts himself upon the country. Wherefore he prays judgment for title and possession of said land and the houses, machinery, and all improvements thereon; or, if he is denied a recovery of the land, then he prays that he be awarded the houses, machinery, and all improvements thereon, and be allowed to pay plaintiff the value of the lot of land; else that he be allowed a reasonable time in which to remove the houses, machinery, and improvements from said premises; or, if this relief is denied him, then he prays that this cause be removed to the equity docket of this court, and that all matters between plaintiff and defendant as affecting the priority of their respective liens on said property be adjudicated and settled, and that the lien of defendant for $417.27 and $1,000 be declared superior to the lien of the plaintiff on said lot of land, houses, and machinery, and as to so much of said $1,000 as went to pay receiver's certificates issued to pay interest on the debt of plaintiff against the Crystal Ice Co.; that defendant be subrogated to the rights of plaintiff, and have foreclosure of his lien on said lot of land, for costs, and all general and special relief in law or in equity to which defendant is entitled under the facts."

The first assignment of error is that the court erred in refusing to transfer this cause to the equity docket. If, instead of an action of trespass to try title, the suit had been in equity to foreclose a lien upon the premises, the defendant in the bill could not have had affirmative relief without asking the same by a cross bill. We said in Wood v. Collins, 8 C. C. A. 525, 60 Fed. 142, that the rule appeared to be well established that, in order to entitle a defendant in equity to affirmative relief, he should file a cross bill, which should be regularly served, put at issue, and heard as any original bill; citing Ford v. Douglas, 5 How. 143–167, Railroad Co. v. Bradleys, 10 Wall. 299, and White v. Bower, 48 Fed. 186; and quoting from Railroad Co. v. Bradleys, supra: "Parties defendants are as necessary to cross bills as to original bills, and their appearance in both cases is enforced by process in the same manner." The distinction between actions at law and suits in equity in United States courts is not one of form merely, but of vital substance. An action of trespass to try title in the statutory form in Texas cannot be converted into a suit in equity by the answer of a defendant. Plaintiff below brought a purely legal action. If the defendant had equitable rights which he was entitled to enforce against the plaintiff below, he had

Digitized by Google

a clear, adequate course of procedure to arrest or stay the action at law until his equities could be adjudged by the circuit court. He omitted to do this, and will not be heard to urge that the court erred in refusing what the court would have erred to grant.

The other assignments of error become immaterial. The objections taken to the ruling of the court in reference to admitting and rejecting testimony are fully answered by the view here presented of the case as it stood in the circuit court. We do not feel called upon or justified in this case to express any view with reference to the relation of the liens claimed by the plaintiff in error. It is sufficient to say, as we have already said, that his pleading in the circuit court does not present that question. The judgment of the circuit court is therefore affirmed.

(78 Fed. 845.)

COX v. MONTAGUE.

(Circuit Court of Appeals, Sixth Circuit. February 2, 1897.)

No. 428.

1. INSOLVENT NATIONAL BANK—LIABILITY OF TRANSFERROR OF STOCK.

It is not necessary, in order to hold liable for an assessment upon the shareholders of an insolvent national bank one who has transferred his stock to an irresponsible person, to show that the transferror had actual knowledge of the insolvency of the bank at the time of the transfer, but it is sufficient if he had good ground to apprehend its failure, and made the transfer with intent to relieve himself from individual liability.[1]

2. WITNESSES—PRIVILEGED COMMUNICATIONS.

Upon the trial of a suit brought by the receiver of an insolvent national bank to collect an assessment from one who had transferred his stock, a letter written by the defendant to a bank examiner, in reply to an inquiry about the bank, in which defendant admits his transfer of his stock when the bank was embarrassed, is not a privileged communication, though the bank examiner's letter, to which it is a reply, is marked "Confidential."

Appeal from the Circuit Court of the United States for the Southern Division of the Eastern District of Tennessee.

The appellant sued in the court below to set aside the transfer by the appellee, defendant below, to his sister, Clara W. Montague, of 60 shares, of the par value of $100 each, of the capital stock of the First National Bank of Johnson City, and to recover against the appellee the sum of $6,000, with interest, being the assessment levied on said stock by the comptroller of currency in order to pay the debts of said bank. The transfer was made on the 28th of April, 1894. It is averred in the bill that the bank was then insolvent, as was well known to the defendant, T. G. Montague, which fact was the principal inducement to the transfer; that Montague was the president of the First National Bank of Chattanooga, a correspondent of the Johnson City Bank, and that he was familiar with the condition of its affairs; that the Johnson City Bank had long been in failing circumstances, and that the Chattanooga Bank had frequently supplied it with funds to prevent its suspension.

It is further averred that Clara W. Montague, who was made a defendant, was insolvent at the time of the transfer of the stock and at the date of the filing of

---

[1] As to who are liable to assessment as "shareholders" in national banks, see note to Beal v. Bank, 15 C. C. A. 130.

Digitized by Google

the bill, and that the transfer to her was made with intent on the part of T. G. Montague to avoid individual liability as a shareholder, and was voluntary and fraudulent. Clara W. Montague made no defense to the bill, which, as to her, was taken for confessed. T. G. Montague, in his answer, admitted that he had held the 60 shares of stock, and that he transferred them to his sister. He denied that the bank was insolvent at the time of the transfer, or that he had information which would lead him to suspect its insolvency, but admitted that the Chattanooga Bank did extend aid and credit to the Johnson City Bank; also that the transfer of stock to his sister was voluntary, but denied that it was fraudulent, averring that it was prompted by and founded upon the consideration of love and affection.

The bank of Johnson City was twice examined by J. M. Miller as a national bank examiner; first on January 22, 1894, and second and lastly on or about November 9, 1894, when he closed the bank. That examination disclosed the insolvency of the bank, its liabilities being about $100,000, and "its solvent assets" about $40,000. The examiner testifies that the condition of the bank at that time had not, apparently, much changed since his examination in January, 1894. There had in the meantime been a loss of $3,000 by the bank in one transaction, and between $1,000 and $2,000 on another; but he testifies that he is unable to state how long before the bank was closed it was in fact insolvent, but gives it as his opinion that it was so in January, 1894, and in April, 1894.

Attached as exhibits to the depositions of the complainant are letters from the defendant, T. G. Montague, addressed to the president of the Johnson City Bank; also one letter addressed by him to the examiner. From these letters it appears that Montague, on the 28th of January, 1893, sent $800 to the Johnson City Bank; on the 20th of May, 1893, $5,000, in silver, for which exchange was to be furnished by the Johnson City Bank. On the 18th of July of that year he wrote, calling attention to the fact that the overdraft of the Johnson City Bank on the Chattanooga Bank, which on the 10th of July was $3,183, had increased to $5,036, and complains that no substantial collateral had been sent. From a letter written by him on the 29th of July it appears that the Johnson City Bank had mailed them $2,000 of business paper for discount. Montague said: "You appear to think we are a currency factory. On the 30th of June you overdrew $1,500 'for a few days at the outside.' Your account has been overdrawn continuously since. On the 17th of July you wrote us that your overdraft might be increased to $4,400, which would be paid in a few days. After sending the collateral, you continue to overdraw until the amount last night was $8,070." He refers to New York exchange received that day which reduced the overdraft to $6,070, but complains that at the same time they sent for $2,000 additional, which he declined to furnish, and calls for the money that was then charged up against the bank, and desires that it be paid as rapidly as possible. On the 31st of July he telegraphed that he that day shipped to the Johnson City Bank $2,000 in currency. On the 3d of August, 1893, he made another remittance of $2,000 in currency. On the 7th, by arrangement with the president of the Johnson City Bank, he expressed $2,000 silver and $3,000 exchange to New York City for account of the Johnson City Bank; making the advance to the Johnson City Bank then outstanding, $10,500. Referring to telegram asking for $1,000 more, he declines to furnish it, stating that the president had assured him that the bank would get along without additional assistance until what was already owing should be repaid. On the 10th of August he telegraphs to the president of the Johnson City Bank that he had deposited in New York $2,000. On the 11th he telegraphs and writes declining an application for a further advance. On the 12th he writes to the president of the Johnson City Bank, calling attention to the fact that the account of the bank was then overdrawn $3,400, and "the $5,000 loan for five days due and unpaid. I do not see any help for you. You do not seem to have gotten help in New York to keep up. We cannot send you any money. We have all that we can do to meet our own demands, unless you can pay us the balance of account and send us good paper to abundantly cover it." On the 21st of August, 1893, he complains by letter that the Johnson City Bank had made a draft on them for $500, to be paid in cash, adding: "We need very much the amount of your note which is overdue, and cannot pay checks when you have no funds to your credit. We wish to be accommodating, and do everything possible, but we cannot manufacture money." On the 31st of January, 1894, he writes to the president of

Digitized by Google

the Johnson City Bank that the bank's account was overdrawn $5,200, that they had collateral for only $4,800, and therefore declines to make remittances to New York, as requested. On the 4th of September, 1894, asks that the Johnson City Bank reduce its overdraft, which then remained at $5,070. On the 7th of November, 1894, John M. Miller, Jr., examiner, wrote to Montague a letter marked "Confidential," inquiring concerning the business character and reputation of the president of the Johnson City Bank. To that letter, Montague, after answering the inquiries of Miller, added, "I became alarmed after seeing several of his reports as made to the comptroller showing his cash often below the required reserve, and disposed of my stock some time ago." Referring to Crandall's transaction, he wrote that he had thought that "he was anxious to do more business than the capital stock of his bank would warrant," and that "his capital was largely tied up by loans to parties who could not pay; that any sudden demand upon him for $1,000 or $2,000 required that he should get assistance from other banks to tide over"; and stated that he knew "that the failure of railroads and land enterprises in and around Johnson City crippled a large majority of the business men, and that they had been very hard up for the past three years. We hoped from month to month that he would realize on enough of this suspended paper to carry his bank through successfully."

The deposition of Miss Montague was taken by complainant. She states that she first learned from T. G. Montague that the stock had been transferred to her, and that he told her of it, she thought, in May or June of 1894, adding that it might have been in April, and at that time he turned over the new certificates of stock to her. She never asked for the stock; it was a present to her. He had never, before telling her of the transfer, had any conversation with her about it. At first she declined to answer whether she had any property in Hamilton county, Tenn., but afterwards admitted that she had not. Said that she did own property somewhere. She thought that that property was in her own name, but did not know whether it was or not. It was not in the state of Tennessee, and she owned no property in that state. T. G. Montague was not a witness. James E. Brading, who was cashier of the Johnson City Bank, was called as a witness for defendant. He testified that on the 27th of April, 1894, R. S. Boyd, who was understood to be insolvent, but nevertheless was said to have good credit in the Jonesborough Bank, offered 50 cents on the dollar in cash for $1,000 of T. G. Montague's stock in the Johnson City Bank, with the understanding that $2,000 or $3,000 more could probably be handled at the same figure, and possibly the entire $6,000. This offer was communicated in writing to Montague, and by him declined.

Brading testifies that he thinks he communicated by writing Boyd's offer on the 27th of April, the date that it was made. It does not appear to have reached Montague before his letter of the following day, directing the issue of certificates to his sister, had been posted; nor does it appear that Montague gave any reason for declining to accept the offer excepting that which he avers in his answer, which was not called for under oath, but was sworn to. It appears also by the testimony of Brading that at the date of the transfer by Montague of his stock to his sister the general estimate at Johnson City of the value of the stock was from 50 to 75 cents.

Robert Pritchard, for appellant.
Thomas McDermott, for appellee.

Before TAFT and LURTON, Circuit Judges, and SAGE, District Judge.

SAGE, District Judge, after stating the facts as above, delivered the opinion of the court.

Montague's letters and telegrams to the Johnson City Bank make it evident that he knew months before he made the transfer of his stock to his sister that the bank was in imminent danger of insolvency. That transfer was not only without consideration, but, at the time, without even the knowledge of his sister. It was made

Digitized by Google

on the 28th of April, 1894. She testified that, according to her recollection, she was informed of it in May or June, 1894, but added that it might have been in April. Her testimony as to her financial condition is altogether unsatisfactory. Her unwillingness at first to give any testimony on the subject was enough to warrant the most unfavorable inferences. At last she admitted that she had no property in Tennessee. Said that she did own some property somewhere, which she thought was in her own name, but did not know whether it was or not. That she did not take sufficient interest in the case to make any answer, and that she suffered decree against her by default, strongly indicates that she was utterly irresponsible financially, or that she had herself no faith in the integrity of the transaction. She was not even a witness of her own volition, or upon the call of the defendant, but was subpœnaed and examined on behalf of the complainant. Montague himself was not a witness in the case,—a circumstance which, in view of the evidence against him, is of great weight. A like circumstance in Bowden v. Johnson, 107 U. S. 251, 2 Sup. Ct. 246, cited later in this opinion, was so characterized by the supreme court. In his answer Montague set up that a few days prior to the transfer of his stock he was offered by a responsible party in Johnson City 50 cents on the dollar for a portion thereof, with the assurance that a great part, if not all, of the residue would be taken at the same price. That averment undoubtedly relates to the offer above referred to, for it does not appear that any other was made. It does not appear from the evidence that the person who made the offer was insolvent, although one person is said to have declared that he had good credit in the Jonesborough Bank. The offer was for $1,000 of the stock at 50 cents on the dollar. It was not made until the 27th of April. Montague's letter inclosing to the bank the certificates for his shares with an order for their transfer to his sister was dated and mailed the next day, April 28, 1894, at which time the offer to him could not have been received. That fact alone is sufficient explanation of his declination. It may have been also that, while he had abundant reason to apprehend the failure of the bank, he still hoped that it would pull through, in which event the stock could be transferred to him by his sister. If there were any doubt as to the motive which induced him to make the transfer, it would be removed by his letter under date of November 8, 1894, to the bank examiner, who had on the previous day written him a confidential letter inquiring concerning the president of the Johnson City Bank, and asking for the name of some thoroughly reliable and well-posted person at or near Johnson City to consult "on credits," etc. The learned judge who heard the case below was of opinion that this letter could not be properly used against the defendant, because it was a confidential letter, and voluntarily turned over by the bank examiner to the receiver. We do not concur in that view. The letter was in no sense a privileged communication, and the mere fact that it was in answer to a letter marked "Confidential" cannot, in our opinion, be regarded as a legal objection to its use as testimony. The au-

Digitized by Google

thorities are the other way. In Wilson v. Rastall, 4 Term R. 753, Lord Kenyon said:

"But if a friend could not reveal what was imparted to him in confidence, what is to become of many cases even affecting life, e. g., Doctor Ratcliff's Case, 9 State Tr. 582. And if the privilege now claimed extended to all cases and persons, Lord W. Russell died by the hands of an assassin, and not by the hands of the law, for his friend, Lord Howard, was permitted to give evidence of confidential conversations between them." 3 State Tr. 715.

In the same case, Buller, J., said that it was indeed hard in many cases to compel a friend to disclose a confidential conversation, but that the privilege must be confined to the cases to which it extends. In Loyd v. Freshfield, 2 Car. & P. 329, it was held that a banker is bound to disclose a communication, however confidential.

The letter to Montague was written by Miller in his official capacity, and signed by him as examiner. Montague's answer is addressed to the examiner in his official capacity. It may well be doubted whether such letter, whatever may have been the intention of the writer, can be regarded as confidential in the sense in which the court below regarded it, and in the sense which counsel for appellee seek to apply here. Besides, the information called for by the examiner was with reference to the president of the Johnson City Bank. Montague's answer volunteered, in addition, among other things, this very significant statement respecting the Johnson City Bank: "I became alarmed after seeing several of his reports as made to the comptroller, showing his cash often below the required reserve, and disposed of my stock some time ago." We know of no reason founded upon any principle of the law of evidence why this statement, which is a distinct and unequivocal admission of a fact, should be excluded. It tells the reason for the transfer of the stock in plain, direct words, which cannot be mistaken. This statement, taken in connection with the letters first above referred to, the testimony of Clara W. Montague, and the omission of defendant, Montague, to testify as a witness for himself in answer to the evidence against him, brings the case clearly within the rule stated in Bowden v. Johnson, 107 U. S. 261, 2 Sup. Ct. 254, that:

"Where the transferror, possessed of information showing that there is good ground to apprehend the failure of the bank, colludes and combines, as in this case, with an irresponsible transferee, with the design of substituting the latter in his place, and of thus leaving no one with any ability to respond for the individual liability imposed by the statute, in respect of the shares of stock transferred, the transaction will be decreed to be a fraud on the creditors, and he will be held to the same liability to the creditors as before the transfer. He will be still regarded as a shareholder quoad the creditors, although he may be able to show that there was a full or a partial consideration for the transfer as between him and the transferee."

The rule does not require proof that the transferror had actual knowledge of the insolvency of the bank, and that the transfer was made with a purpose to avoid individual liability. It is enough if the transferror had "good ground to apprehend the failure of the bank," and made the transfer to an irresponsible person, with intent to relieve himself from individual liability. Proof of actual knowledge of the insolvency of the bank was not made in Stuart v.

Digitized by Google

Hayden, 18 C. C. A. 618, 72 Fed. 402, but the court of appeals of the Eighth circuit held the transferror liable. In Foster v. Lincoln, 74 Fed. 382, the defendant was president of the National Bank of Lyndon, Vt., and held 25 shares of stock in the First National Bank of Deming, N. M., which telegraphed to the Lyndon Bank, also a stockholder, for $5,000, to be sent by telegraph, for its aid. Within a week afterwards defendant made a voluntary transfer of his stock to his children, all of whom were financially irresponsible. The facts above stated were put in evidence, and it was shown, in addition, that the telegram for aid, when it was received, came to the knowledge of the defendant, who was sued to enforce his individual liability as a stockholder. That was all the evidence against him. The court regarded the telegram, which was received and came to defendant's knowledge six days before the transfer of his stock, as sufficient warning to him of the straits of the bank, and entered decree for the complainant. That case was not so strong for the complainant as is this case. There the defendant was a witness. Here the defendant was silent, and, although the transfer was voluntary, and made to his own sister, without her knowledge, she being financially irresponsible, and so little interested in the result as to make no defense, he declined to be a witness, made no explanation, and rested solely upon the contention that the complainant had not succeeded in making specific proof of the insolvency of the bank at the date of the transfer of the stock; and that, if the bank was then insolvent, it was not proven that he knew it or had notice of any other facts from which such knowledge could be inferred. That the contention is not well founded is apparent from what has been already expressed in this opinion. The appellant is entitled to decree as prayed in the bill. The decree below will be reversed, with instructions to enter a decree in accordance with this opinion.

(78 Fed. 850.)

TOWNSEND et al. v. P. J. WILLIS & BRO. et al.

(Circuit Court of Appeals, Fifth Circuit. February 2, 1897.)

No. 456.

ADMINISTRATOR OF COMMUNITY PROPERTY—APPROVAL OF BOND—COLLATERAL ATTACK.

The statutes of Texas provide (Rev. St. 1895, art. 2222 et seq.) that a husband who survives his wife, in order to be appointed administrator of and authorized to sell the community property, must give a bond conditioned for faithful administration of such property and payment of one-half to the persons entitled, which bond shall be approved by the county judge, whose order of approval shall be recorded in the minutes of the court which has general jurisdiction in probate matters. *Held*, that an order so made is in effect a judgment of the court, and is not void or open to attack in a collateral proceeding, although the bond accepted and approved by it does not conform to the statutory requirements.

Appeal from the Circuit Court of the United States for the Northern District of Texas.

Digitized by Google

This suit was originally begun in the district court of Erath county by appellants, all of whom are citizens of the state of Texas, against P. J. Willis & Bro., a corporation duly incorporated under the laws of the state of West Virginia, and F. C. Oldham, a citizen of Texas. On the application of P. J. Willis & Bro., the cause was removed to the United States circuit for the Northern district of Texas, and there, on motion, the court ordered that the pleading should be recast so as to conform to the rules of equity practice, whereupon appellants filed their amended bill, therein alleging that they inherited from their mother an undivided half interest in the lands described in said bill; that their father, F. C. Oldham, after the death of their said mother, undertook to qualify, under the laws of Texas, as survivor of the community, and thereafter conveyed the lands in question to P. J. Willis & Bro., in settlement of indebtedness, all of which accrued, as appellants claim, after the death of their said mother; that the attempted qualification of F. C. Oldham, as survivor, was absolutely void and of no effect whatever; specifically charging as follows:

"And plaintiffs allege: That thereafter, on the 21st day of April, 1890, F. C. Oldham filed in the probate court of Erath county, Texas, an application for appointment as community administrator of the community estate of himself and his deceased wife, M. V. Oldham, which was by said court on said day allowed, and appraisers appointed to inventory and appraise said estate, which inventory and appraisement was returned into said court on April 15, 1890; and thereupon the said F. C. Oldham, being required to enter into a bond as such administrator in the sum of twenty-seven thousand four hundred and eighty dollars, conditioned as the law required, executed and filed with said court a certain pretended bond; and thereupon said court indorsed the same as being filed and approved, and made and had entered on the record minutes of said court a certain order as judgment approving said bond, and authorized him to have, dispose of, and sell all the community property of said estate, as shown in said inventory, and which embraced the property hereinbefore described. That said bonds and said indorsements and judgment were and are substantially as follows, to wit:

" 'No. 113. Bond filed May 13th, 1890.

" 'The State of Texas, County of Erath. Know all men by these presents, that we, F. C. Oldham, as principal, and H. A. Smith and A. A. Chapman, as sureties, are held and firmly bound unto the county judge of the county of Erath and state of Texas, and his successors in office, in the sum of twenty-seven thousand four hundred and eighty and 00-100 dollars, conditioned that the above-bound F. C. Oldham, who has been appointed by the county judge of Erath county administrator of the estate of M. V. Oldham, deceased, shall well and truly perform all the duties required of him under said appointment.

" '[Signed] F. C. Oldham.
" 'H. A. Smith.
" 'A. A. Chapman.

" 'No. 113. Decree.

" 'The State of Texas, County of Erath. On this 13th day of May, A. D. 1890, came to be heard the inventory, appraisement, and bond of the survivor of the estate of F. C. Oldham and his deceased wife, M. V. Oldham, the same having been duly considered by the court; and it appearing to the court that said appraisement is fair, just, and reasonable, and a fair valuation placed thereon, and that said bond is sufficient, it is therefore considered, ordered, adjudged, and decreed by the court that said appraisement and bond be, and the same is hereby, in all things approved, and that F. C. Oldham, survivor, be, and he is hereby, authorized to manage, control, and dispose of said community property above inventoried.'

"And which said bond and the order and judgment so rendered and entered was and is erroneous, unauthorized, and unlawful, in this, to wit: (1) Said bond was and is unlawful and void as a bond to protect these plaintiffs, as heirs of M. V. Oldham, because the same shows on its face to be a bond by F. C. Oldham, as the regular administrator of the estate of M. V. Oldham, and not a bond of F. C. Oldham, as community administrator of the community estate of himself and his deceased wife, M. V. Oldham, and there being nothing in said bond or any reference therein to any other writing describing the particular estate that the sureties thereon were liable as such sureties, and nothing in said bond or reference to any writing therein defining and describing the subject-matter of the undertaking of said sureties, and that

Digitized by Google

said bond on its face showing no undertaking on the part of said sureties to be liable in any other way except as shown in said bond, and that said bond is insufficient and incompetent to bind said sureties as sureties for said F. C. Oldham as the community administrator of the community estate of himself and his deceased wife, M. V. Oldham. (2) Said bond was and is erroneous, unlawful, and void, and wholly contrary to law, and insufficient and incompetent as a bond to secure and protect the heirs of M. V. Oldham in their interest in said estate, in this: that said bond is only conditioned that said F. C. Oldham shall well and truly perform all the duties of administrator of the estate of M. V. Oldham, and which is the only condition therein, and is not conditioned, as provided by law in cases of community administration, that said F. C. Oldham will faithfully administer the community estate of himself and his deceased wife, M. V. Oldham, and pay over one-half the surplus thereof, after the payment of the debts with which the whole of said property is properly chargeable, to such person or persons as shall be entitled to receive the same; and therefore said bond is irregular, erroneous, and void, and said sureties were not and are not bound thereby to protect and secure the heirs of M. V. Oldham their interest in said property. And (3) because the facts above set forth as to the irregularity, incompetency, and insufficiency of said bond, and because no bond, in fact, was ever made and delivered to said court provided and conditioned as the law requires, by F. C. Oldham, to entitle him to be appointed and authorized to act as the surviving administrator of the community estate of himself and his deceased wife, M. V. Oldham. The action of the court in approving said bond, and the order and judgment thereon made by said court approving the same, and authorizing said Oldham to act as such administrator, and to sell, control, and dispose of said property, was irregular, erroneous, and unlawful, without authority in the court so to do, and the same was and is void, and the court has no authority to have the same entered on the minutes of said court, and the entire matter as to these plaintiffs in this proceeding was and is void; and said bond and order of the court, as heretofore set out in this petition, is made part of the allegations here now made as to said bond and order."

The amended bill further alleged that, with full knowledge of the facts, P. J. Willis & Bro. received deeds to the property from F. C. Oldham in payment of debts due by him to them, and which accrued subsequent to the death of their mother, M. V. Oldham; that all the community debts of F. C. Oldham and his deceased wife had been fully paid prior to the conveyances to P. J. Willis & Bro., out of community assets; and that F. C. Oldham, at the time of said conveyances, was insolvent; and that P. J. Willis & Bro. had full notice of all these facts. The prayer of the bill was that said deeds be canceled, and held for naught, and for a partition of the land, and for rents, and for general and special relief.

The defendant P. J. Willis & Bro. demurred to the amended bill on these grounds: (1) That complainants were not entitled to the relief prayed for. (2) That it appeared that administration had been opened on the estate of M. V. Oldham, and the defect in the bond was a mere irregularity, and the bond was in substantial compliance with the law, wherefore the said bill is insufficient. (3) That it appeared by said bill that, if said bond was defective, yet a court having jurisdiction had declared the same sufficient, and had entered an order declaring said F. C. Oldham administrator of the community property of himself and deceased wife, and the same was res adjudicata, and for this reason the bill is insufficient. The court sustained the demurrer, and dismissed the bill. From this decree, appellants prosecute this appeal.

W. M. Sleeper, for appellants.

Eugene Williams, for appellees.

Before PARDEE and McCORMICK, Circuit Judges, and MAXEY, District Judge.

PARDEE, Circuit Judge (after stating the facts). The provisions of the Revised Statutes of Texas in regard to the administration of community property which are pertinent to the issues in this case are as follows:

"Art. 2219 (2194). The community property of the husband and wife, except such as is exempt from forced sale, shall be liable for all debts contracted during marriage.

Digitized by Google

And in the settlement of such community estates it shall be the duty of the survivor, executor or administrator, to keep a separate and distinct account of all the community debts allowed or paid in the settlement of such estate."

"Art. 2221 (2166). When the wife dies * * * leaving a surviving husband and a child or children the husband shall have the exclusive management, control and disposition of the community property, in the same manner as during her lifetime * * * subject, however, to the provisions of this chapter.

"Art. 2222 (2167). The husband shall within four years after the death of the wife, when there is a child or children, file a written application in the county court of the proper county stating (1) the death of the wife and the time and place of her death. (2) That she left a child or children, giving the name, sex, age and residence of each child. (3) That there is a community estate between the deceased wife and himself. (4) Such facts as show the jurisdiction of the court over the estate. (5) Asking for appointment of appraisers, to appraise such estate.

"Art. 2223 (2168). Upon the filing of such application the county judge shall without citation, and either in term time or vacation, by an order entered on the minutes of the court, appoint appraisers to appraise such estate as in other administrations.

"Art. 2224 (2169). It shall be the duty of the surviving husband, with the assistance of any two of the appraisers, to make out a full, fair and complete inventory and appraisement of such community estate and the husband shall attach thereto a list of all community debts, due the estate, and such inventory, appraisement and list shall be sworn to and subscribed and returned to the court within twenty days from the date appointing appraisers, and in like manner as in other administrations.

"Art. 2225 (2170). The surviving husband shall, at the same time he returns the inventory, appraisement and list of claims, present to the court his bond, with two or more good and sufficient sureties, payable and to be approved by the county judge, in a sum equal to the whole of the value of such community estate, as shown by the appraisement, conditioned that he will faithfully administer such community estate, and pay over one half the surplus thereof after the payment of the debts, with which the whole of said property is properly chargeable, to such person or persons as shall be entitled to receive the same.

"Art. 2226 (2171). When any such inventory, appraisement, list of claims and bond are returned to the county judge, he shall, either in term time or vacation, examine the same and approve or disapprove them, by an order to that effect entered upon the minutes of the court, and when approved the same shall be recorded on the minutes of the court, and the order approving same shall also authorize such survivor to control, manage and dispose of such community property in accordance with the provisions of this chapter.

"Art. 2227 (2172). When the order mentioned in the preceding article has been entered, such survivor, without any further action in the county court shall have the right to control, manage and dispose of such community property, real or personal, in such manner as may seem best for the interests of the estate, and of suing and being sued with regard to the same, in the same manner as during the lifetime of the deceased, and a certified copy of the order of the court mentioned in the preceding article, shall be evidence of the qualification and right of such survivor."

"Art. 2229 (2174). Any person interested in such community estate may cause a new appraisement to be made of the same, or a new bond may be required of the survivor for the same cause and in like manner as provided in other administrations."

"Art. 1840 (1789). The county court shall have the general jurisdiction of a probate court. It shall probate wills, grant letters testamentary or of administration, settle the accounts of executors and administrators and transact all business appertaining to the estate of deceased persons, including the settlement, partition and distribution of such estates.

"Art. 1841 (1790). The district court shall have appellate jurisdiction and general control in probate matters over the county court established in each county for the probating of wills, granting letters testamentary or of administration, settling the accounts of executors and administrators and for the transaction of business appertaining to estates, and original jurisdiction and general control over executors and administrators under such regulations as may be prescribed by law."

The above articles have long been the law of Texas, and are quoted from the Revised Statutes of Texas of 1895.

Digitized by Google

The main question raised by the demurrer to the amended bill is whether the proceedings had in the county court of Erath county in the matter of the estate of M. V. Oldham, wife of F. C. Oldham, deceased, wherein the bond required from the surviving husband, F. C. Oldham, under the provisions of article 2225, was duly approved and entered and recorded upon the minutes of the court in accordance with article 2226, were absolutely void, or merely irregular. If void, the P. J. Willis & Bro. corporation acquired no title to the property claimed by appellants. If voidable or irregular only, then in this case the order of the county court of Erath county, approving the bond of F. C. Oldham, survivor, has the force of the thing adjudged, and cannot be collaterally attacked. It is to be noticed that by article 1840 the county court has the general jurisdiction of a probate court; and that by article 2226 the order of the county judge approving the bond of the surviving husband for the administration of the community is to be spread upon the minutes, making it substantially the judgment of the court; and that by article 1841 the district court is restricted to appellate jurisdiction in probate matters, except with original jurisdiction and general control over executors and administrators, under such regulations as may be prescribed by law.

Under similar provisions, the supreme court of the state of Texas, in Buchanan v. Bilger, 64 Tex. 589, 591, held:

"It is now the well-settled doctrine of this court that the district court has no original jurisdiction to revise and correct the proceedings, orders, and decrees of a county court sitting in matters of probate. Its jurisdiction in this respect is entirely appellate, and to be exercised by means of an appeal or writ of certiorari, as provided in the Revised Statutes."

In Jordan v. Imthurn, 51 Tex. 286, Pratt v. Godwin, 61 Tex. 334, and Cordier v. Cage, 44 Tex. 534, the same court decided that irregularities in proceedings in the county court had by a surviving husband, to qualify himself to dispose of the community estate after the death of his wife, will not vitiate a sale of the community property. In Jordan v. Imthurn the court says:

"It was an irregularity to have taken a bond for an amount less than the appraised value of the property, but, in our opinion, not sufficient, under the circumstances, to have rendered the proceedings void. The giving of the bond by the surviving husband, and its approval by the clerk, was in the nature of a judicial proceeding, which should not be held void on a collateral attack. It seems to have been given and accepted in good faith, to have been acted upon and acquiesced in by all parties interested, and no direct proceedings taken to avoid it, and have a new or additional one given."

In Green v. Grissom, 53 Tex. 435, in dealing with questions arising under the same statutes, the supreme court says:

"This court has firmly upheld proceedings under this and subsequent statutes on this subject, where they seem to have been taken in good faith, for the legitimate purposes contemplated by these acts, and when in substantial compliance with their spirit and intention."

In the proceedings recited in the bill in this case, in view of the above-quoted statutes and decisions, it cannot be contended that the county court of Erath county was without jurisdiction in the premises, or that the acceptance and approval of the bond of F. C.

Digitized by Google

Oldham, as survivor in community, was beyond its jurisdiction. If the county court had jurisdiction in the matter, it follows that its decision, that the bond in question was good and sufficient, cannot be questioned in any other court except in the exercise of an appellate jurisdiction. As this suit was instituted in the district court of Erath county, not by way of appeal from or by certiorari to the county court, it is clear that the district court of Erath county was without jurisdiction to inquire into and pass upon the sufficiency of the bond in question.

The case concedes that the P. J. Willis & Bro. corporation acquired the property in controversy from F. C. Oldham, survivor in community, after the inventory, appraisement, and bond were approved in the county court of Erath county. Therefore, so far as the amended bill shows, the title acquired by the said corporation was valid as against the heirs at law of M. V. Oldham, wife of F. C. Oldham. The demurrer to the amended bill appears to have been properly sustained. No other questions argued need be considered. The decree of the circuit court is affirmed.

(78 Fed. 862.)

WHITE v. THACKER et al.

(Circuit Court of Appeals, Fifth Circuit. February 2, 1897.)

No. 528.

1. TRESPASS TO TRY TITLE—GOOD FAITH OF CONVEYANCE—EVIDENCE—POWER OF ATTORNEY.

   In an action of trespass to try title, in which a substantial issue is the good faith of a conveyance under which the plaintiff claims, the transactions of all the parties touching the land in controversy become material, and deeds purporting to be made under a power of attorney given by the plaintiff are entitled to be considered by the jury, upon the question of good faith, whether or not such power is in a form to make the deeds executed under it sufficient to raise an outstanding title.

2. WITNESSES—PRIVILEGED COMMUNICATIONS.

   When a party has introduced in evidence letters written to him by his attorney in reference to the transactions affecting the matters in issue, he thereby opens the door to justify and require the court to admit the testimony of such attorney, when called by the opposite party to testify as to such transactions.

3. REVIEW ON ERROR—WAIVER OF JURY—SPECIAL FINDINGS.

   When a case has been tried by the court without a jury, pursuant to stipulation, under Rev. St. § 700, the circuit court of appeals will not make inquiry as to the correctness of special findings of fact made by the trial court. City of Key West v. Baer, 13 C. C. A. 572, 66 Fed. 440, followed.

In Error to the Circuit Court of the United States for the Eastern District of Texas.

Robt. G. Street and M. F. Mott, for plaintiff in error.

E. P. Hamblin, for defendants in error.

Before PARDEE and McCORMICK, Circuit Judges, and MAXEY, District Judge.

Digitized by Google

McCORMICK, Circuit Judge. On September 20, 1892, John F. White, the plaintiff in error, brought this action of trespass to try title to about 30 acres of land in Harris county, Tex., against R. J. Thacker, W. J. Coulter, James Winlock, John Woods, and Lem Collins. The petition is in the statutory form. All of the defendants answer with the formal statutory plea of not guilty, and R. J. Thacker pleaded specially the statute of limitations. A jury was waived by stipulation in writing, and the matters of law as well as of fact were submitted to the court without a jury.

The land in controversy, and two other tracts, was purchased on June 2, 1876, and a deed embracing the three tracts was made to Jennie G. White, reciting a cash consideration. Afterwards George White, the father of Jennie G. White and of the plaintiff, together with Jennie G. White, became indebted to John Sweeney, and gave him their note for $600, secured by mortgage bearing date April 9, 1878, on one of the tracts of land conveyed to Jennie G. White in the deed above mentioned. Default having been made in the payment of the note, Sweeney obtained judgment against the makers, with foreclosure of the mortgage upon the land, on December 8, 1880. Under this judgment of foreclosure the mortgaged premises were sold on February 1, 1881, the plaintiff in the judgment becoming the purchaser at a price that did not extinguish the judgment. An execution on the judgment was run against other property of Jennie G. White, under which the land in controversy was sold, and purchased by the plaintiff in the judgment, June 6, 1882. A sheriff's deed therefor to John Sweeney was recorded June 28, 1882. On March 18, 1880, Jennie G. White conveyed all the property embraced in the deed to her first above mentioned to the plaintiff, John F. White. On August 31, 1883, the plaintiff made a power of attorney to his father, George White, which was recorded in September, 1883, appointing him attorney in fact to represent the plaintiff in all litigation, and undertaking to authorize him "to sell or bargain all that parcel of land on Clear creek, in Harris county and Brazoria county, known as the 'D. C. Hall Headright,' containing 553½ acres; also to bargain and sell the same as if I had been there myself to act upon the Thomas Earle league on ———, near Lynchburg, of 553½ acres; also 125 acres in Polk county out of the Stublefield tract; also about thirty acres out of the Luke Moore league in Harris county, near the city of Houston,—all in Texas; also a tract of 320 acres in Alabama, Lauderdale county, near Florence, known as the 'Hudson Beck Tract.'" On March 9, 1885, George White, purporting to act under the above-recited power of attorney, executed a deed for the three tracts to Trippe & Beaird, of Alabama, reciting a cash consideration, which was filed for record October 2, 1885. On May 2, 1885, also purporting to act under said power, George White executed a deed for the same land to James McEwan, of Detroit, Mich. This deed recited a cash consideration, and was filed for record the day of its execution. In May, 1886, John Sweeney conveyed the land in controversy to W. J. Coulter. There was proof tending to show that the defendants and those under whom they claim had had successive, continuous possession of the premises from December, 1882, till the institution of this action. Along with

Digitized by Google

other proof offered by the defendants under their plea of not guilty, they offered the power of attorney from John F. White to George White, the deed from John F. White by George White to James McEwan, and the deed from John F. White by George White to William H. Trippe. There was proof tending to show that the cash consideration mentioned in the deed to Jennie G. White was money belonging to her insane mother, and that she took the title charged with a secret trust in favor of her mother. There was proof also tending to show that she transferred this title to her brother, John F. White, the plaintiff, in furtherance of the purpose that the same should be held for their insane mother.

The court made special findings of fact as follows:

"(1) That the plaintiff has no regular chain of title from the sovereignty of the soil, because of defective descriptions and acknowledgments. (2) That Jennie G. White acquired good title to the lands in controversy by deed from A. A. Tucker of date June 2, 1876, and through the partition proceedings in the district court between Emily Ann Tucker and said Jennie G. White, and shown in the abstract of title of defendants. (3) That the common source of title between plaintiff and defendants is Jennie G. White. (4) That the conveyance or deed made by Jennie G. White to John F. White on the 18th day of March, 1880, was made by Jennie G. White to hinder and defraud her creditors and the creditors of George White, and especially to hinder, delay, and defraud John Sweeney, to whom said Jennie G. and her father, George White, were at the time indebted; and that said deed to John F. White was void. (5) That the deed from John F. White by George White, his agent and attorney in fact, to Trippe & Beaird, and the deed from said John F. White by said George White, as attorney in fact, to James McEwan, to the land in controversy, constituted an outstanding title of which defendants could avail themselves. (6) That defendants are entitled to recover upon said outstanding title and upon their pleas of limitation of three, five, and ten years. And to the foregoing findings and conclusions plaintiff duly excepts."

And rendered judgment:

"That the plaintiff take nothing by his suit, and that the defendants go hence without day, and recover of the plaintiff all costs about this suit incurred, and have execution therefor."

The assignment of errors suggests, first, that the court erred in admitting the deeds to the land in controversy from John F. White by attorney, George White, to James McEwan and to William H. Trippe and James P. Beaird. In the abstract of title filed by the defendants Thacker and Coulter in response to plaintiff's demand, the power of attorney and the deeds just mentioned were embraced, and were followed by the memorandum that "these three instruments will be offered principally for the purpose of showing outstanding title against the plaintiff." Plaintiff contends that they do not show outstanding title, because of the patent defect and ambiguity in the description of the land in the power of attorney. The defendant in error suggests and urges that the testimony of the plaintiff—which testimony was taken by deposition—refers to this power of attorney as having been acted upon by his father, George White; that the testimony was taken long after the transaction, the deed by the attorney in fact described the land in controversy, and the plaintiff's testimony recognizes it as having been conveyed under the power of attorney, and does not question the authority of his attorney in fact, but only insists that the authority was never exercised. It is, however, unnecessary for us to pass on these contentions, for a substantial issue in the case was the

Digitized by Google

good faith of the conveyance from Jennie G. White to the plaintiff, and on that issue the transactions of all the parties touching the land in controversy became material, and the purported dealings under the power of attorney, whether sufficient to raise an outstanding title, were circumstances to be considered by the jury in passing upon this question of good faith.

The plaintiff in error complains that the court erred in admitting in evidence that portion of Thacker's testimony wherein he testifies to the alleged fraud of Jennie G. White and George White and of plaintiff in conveying the land in controversy to any person for the purpose of defrauding their creditors, and particularly John Sweeney, the vendor of W. J. Coulter, because, it being shown by their evidence that Thacker was the attorney and confidential adviser of George White, and a party to said fraud, if any, it was incompetent for him to testify on that subject. Before Thacker's testimony was offered in the case, the plaintiff had given in evidence eight letters written on different dates, beginning May 25, 1887, and ending September 9, 1887, from the witness Thacker to George White, in reference to transactions affecting this land, and Thacker's connection with it as White's attorney, which opened the door so as not only to justify the court in admitting Thacker's testimony, but to constrain the court to admit it.

The tenth specification in the assignment of errors is that the court erred in rendering judgment against the plaintiff, specifying thereunder five grounds as a basis for the assignment, but not specifying that the special findings of fact did not support the judgment. It is manifest to us that the first and the fourth special findings of fact do support the judgment, and for this reason this assignment of error is not well taken. For the same reason, the second and third specifications of error become immaterial.

The fifth, sixth, seventh, and ninth specifications suggest that the court erred in its findings. Touching these assignments, the plaintiff contends that, as this cause was tried by the court without the intervention of a jury, on written stipulations of the attorneys, and all the facts in evidence in the court below have been brought before this court, the case should be considered and reviewed here according to the practice on appeals in equity, and equitable principles in like manner applied to its determination; and in support of this contention he relies upon section 700, Rev. St. U. S., Field v. U. S., 9 Pet. 182, and U. S. v. King, 7 How. 854. The case cited from 9 Pet. was decided in 1835, and that from 7 How. in 1849. The statute was passed in 1865. We have had occasion in a number of recent cases to construe section 700, and to announce the rules of practice under it as deduced by us from the terms of the statute and the subsequent decisions of the supreme court. Our views on that subject are fully stated in the opinion of the court in the case of City of Key West v. Baer, 30 U. S. App. 140, 13 C. C. A. 572, 66 Fed. 440. We must, therefore, decline to make inquiry as to the correctness of the special findings of fact made by the circuit court in this case.

There having been no error in the admission of testimony, and the special findings of fact being sufficient to support the judgment, the judgment of the circuit court must be affirmed.

Digitized by Google

(78 Fed. 878.)

ALLINGTON & CURTIS MANUF'G CO. et al. v. BOOTH.

(Circuit Court of Appeals, Second Circuit. February 23, 1897.)

1. PATENT INFRINGEMENT SUITS—PRELIMINARY INJUNCTIONS—WHEN GRANTED.
That defendant is merely a user of a patented machine, or that complainants grant no licenses, but manufacture and sell the machines themselves, is no ground for refusing a preliminary injunction against a willful infringer, where the validity of the patent has been previously adjudicated. Under such circumstances, it does not lie with the infringer to say that the patent owner will be fully compensated by a money recovery.

2. SAME.
Whenever it is manifest that, on the case made, an injunction will be granted at final hearing, one should be granted preliminarily, in the absence of facts presenting special equities to induce the court, in the exercise of its discretion, to withhold it.

Appeal from the Circuit Court of the United States for the District of Vermont.

This was a suit in equity by the Allington & Curtis Manufacturing Company and the Knickerbocker Company against J. R. Booth for alleged infringement of certain patents for improvements in dust collectors. The circuit court granted a preliminary injunction (72 Fed. 772), and the defendant has appealed.

George B. Parkinson, for appellant.
Albert H. Walker and Charles K. Offield, for appellees.

Before WALLACE, LACOMBE, and SHIPMAN, Circuit Judges.

WALLACE, Circuit Judge. This is an appeal from an order restraining the defendant pendente lite from infringing the patents upon which the suit is founded. The patents are for improvements in dust-collecting machines, and their validity had been adjudicated nearly two years prior to the commencement of the present suit. Knickerbocker Co. v. Rogers, 61 Fed. 297. The complainants do not grant licenses, but manufacture and sell the machines. The defendant was a conspicuous infringer, though only a user of the patented machine. Before the present suit was brought, he had been notified of the complainants' rights, but had refused to recognize them, and invited complainants to bring suit against him upon the patents. He had bought his machine from a mercantile firm of Hartford, Conn., which firm had bought it and others from an Ohio corporation engaged in manufacturing the machines. Suits for infringement of the patents had been brought by the complainants, and were pending against the Ohio corporation and the Hartford firm, when the present suit was commenced. No question was raised by the defendant as to the title of the complainants to the patents in suit, or as to the validity or the infringement of the patents. He insisted, and now insists, that the complainants were not entitled to an injunction because they would not suffer irreparable injury if it were denied, but would be completely recompensed by a recovery of damages and profits.

Digitized by Google

The rules which control applications for preliminary injunctions in patent causes are so well settled and familiar that it would seem to be quite useless to recapitulate them, much less to cite from text writers or judicial utterances in exposition of them. We are aware of none which disentitle a complainant to the remedy of a preliminary injunction against the infringement of his patent by a defendant who is a user of the infringing article when the facts are such that he would be entitled to it if the defendant were a manufacturer or a seller. Whenever it is manifest to the court that, upon the case made, an injunction will be granted at final hearing to the complainant, one should be awarded to him preliminarily, in the absence of facts presenting special equitable considerations to induce the court, in the exercise of judicial discretion, to withhold it. Under such circumstances there is no reason why the complainant should not have his remedy immediately. Why should a court of equity permit a wrong, indisputable and wanton, to go unredressed longer than necessary? The object of a preliminary injunction is to preserve property rights pending the final determination of the suit.

The principle upon which all injunctions are granted in patent causes, preliminary and final, is that an action at law does not give a complete remedy to the complainant whose property is invaded. The infringement of a patent is a constantly recurring grievance, which cannot be adequately prevented but by an injunction. "It is quite plain that, if no other remedy could be given in cases of patents and copyrights than an action at law for damages, the inventor or author might be ruined by the necessity of perpetual litigation without ever being able to have a final establishment of his rights." Story, Eq. Jur. § 931. A decree for damages and profits in an equity cause would fall short of adequate redress to the patentee. He is entitled to an injunction as well as to an accounting of damages and profits. Indeed, the accounting is but incidental to the relief by injunction, and it is the right to this relief which alone gives a court of equity jurisdiction. "A recovery does not vest the infringer with the right to continue the use, as the consequence of it may be an injunction restraining the defendant from the further use of it." Suffolk Co. v. Hayden, 3 Wall. 315, 320. In Penn v. Bibby, L. R. 3 Eq. 308, a suit upon a patent against a defendant who was merely a user, the vice chancellor, in awarding an injunction and an account, said: "I cannot in the decree do less than give the plaintiff his full right, and I cannot bargain for him what he may choose or may not choose to do." It does not lie with the infringer to say that the owner of the patent will be fully compensated by a money recovery, and ought to be satisfied thereby. It is for the latter to say whether he prefers an injunction, or a money recovery, or both; and, at his option, he is at liberty, at final hearing, to waive an account, and insist upon his injunction.

We conclude that there was nothing in the circumstance that the defendant was merely a user of the patented invention, or that the complainants derived their profit exclusively from the manufacture and sale of the patented machines, to warrant the court in refusing the injunction. We are also of the opinion that the facts in the

Digitized by Google

case do not disclose any equities upon the part of the defendant, or any oppressive conduct by the complainants, which should have induced the court below to withhold the injunction.

The order is affirmed, with costs.

(78 Fed. 896.)

JACKSON et al. v. DWIGHT et al.

(Circuit Court of Appeals, Fifth Circuit. November 24, 1896.)

No. 532.

FACTORS AND BROKERS—ACTION FOR COMMISSIONS—DEFENSES.

Defendants, being wool factors in Texas, had certain wool, belonging to customers, in their possession, which they were not then authorized either to buy or consign to others. Without the previous knowledge or consent of the owners, they took the same as purchasers, at the price which had been fixed by the owners, which was the full market price, and afterwards paid to them the full sum due. Defendants took the wool in this manner in order to consign it to plaintiffs as factors, in Connecticut, plaintiffs having knowledge of the facts, and advising the transaction. The net proceeds of plaintiffs' sales failed to equal the amounts of their advances, commissions, etc., and they sued to recover the difference. As one ground of defense, defendants set up that their own purchase of the wool was illegal, both at common law and under the Texas statute forbidding factors to purchase from their consignors without written authority (Rev. St. 1895, art. 2432), and that plaintiffs were in pari delicto, and could not recover. *Held*, that there was no room for the application of this doctrine, and plaintiffs were entitled to judgment.

In Error to the Circuit Court of the United States for the Western District of Texas.

During the years 1893, 1894, and 1895, the plaintiffs in error, constituting the firm of Jackson, Cramer & March, were wool factors in San Angelo, Tex., and the defendants in error, who were partners under the firm name of Dwight, Skinner & Co., were wool factors in Hartford, Conn. In May, 1893, H. C. Dwight, of the firm of defendants in error, visited San Angelo, Tex., as a representative of his firm, and, while there, had certain negotiations with plaintiffs in error, who acted through J. N. P. Cramer, a member of that firm, regarding a large lot of wools then in the possession of the plaintiffs in error. As a result of this, plaintiffs in error shipped a large lot of wool to defendants in error, and drew against it, and defendants in error handled this wool in the market at Hartford. This transaction resulted in loss, or, more accurately, the proceeds of the wool were not as much as the advances made on it and the cost of carriage, insurance, and handling. The defendants in error contend that the wools were all consigned to them for sale on commission, and that they were entitled to all advances and expenses made on that account, and also to a stipulated commission, and hence that the plaintiffs in error owe them the difference between the proceeds of the wool and these items. The plaintiffs in error contend: First. That a portion only of the wool was consigned, but that a large part thereof was sold by them to defendants in error at a specified price, in San Angelo; that the prices on these wools were unpaid except the amount advanced; and that the balance due them was several thousand dollars. Second. That, if these wools were not purchased by the defendants in error, they guarantied the specified prices therefor, net at San Angelo, and on this ground owe the plaintiffs in error the same amount as if they had bought the wools. And, third, that, if the transaction between the parties was as contended by the defendants in error, then it was unlawful and void, as a violation by all the parties of the principles and policy of the common law regarding factors and commission merchants, and also of the statutes of the state of Texas

Digitized by Google

on the same subject. November 18, 1895, the defendants in error brought suit in the circuit court for the Western district of Texas, at Austin (the defendants agreeing to that venue), on the 12 drafts drawn by the plaintiffs in error against the defendants in error on account of said shipment of wool, the first dated May 26, 1893, the last July 26, 1893, and the others between these dates, aggregating $45,409.40, allowing credits for the wool of $44,923.36. The plaintiffs in error answered, setting up the defenses above indicated: (a) Purchase by defendants in error of a portion of the wool; (b) guaranty by defendants in error of prices of said wool; and (c) illegality of the transaction. The case was tried by the court, without a jury, July 10, 1896, and judgment was rendered for the defendants in error for the sum of $2,812.64, the amount found to be due on the account as stated by the defendants in error. The judge, upon request, filed conclusions of fact and of law, finding against the plaintiffs in error, on the issues as to a sale of wools to defendants in error and a guaranty of prices by them; and, after stating at length his findings of fact as to the issue of illegality, held, as a matter of law, that the facts so found were no defense to the suit upon the drafts. To all this the plaintiffs in error excepted, and filed bill of exceptions and assignment of errors. The record is here on writ of error for revision of the judgment.

The judge's findings of fact and conclusions of law were in full as follows:

Facts.

(1) I find from the testimony in the case that the defendants executed each of the drafts sued on at the time and for the amount as set out in plaintiffs' petition, and that each of said drafts was presented to and paid by plaintiffs, as alleged in plaintiffs' petition. I further find that the defendants are entitled, as credits against the amounts so paid to them by plaintiffs as the net proceeds of the wools mentioned in plaintiffs' petition, to the several amounts set out in plaintiffs' petition as credits to which the defendants are entitled, and that the amounts remaining unpaid on said drafts, principal and interest, aggregate $2,812.64 at this date.

(2) I find that the testimony does not sustain the defendants' claim that the wools mentioned in Exhibit A to defendants' amended original answer were bought by the plaintiffs from defendants, but that the wools were consigned by the defendants to the plaintiffs, and were sold by the plaintiffs as commission merchants, in due course of business.

(3) I find that the facts do not sustain the defendants' claim that the plaintiffs guarantied to them the price of the wools mentioned in Exhibit A of defendants' said amended original answer.

(4) I find that in the latter part of May, 1893, Mr. H. C. Dwight, a member of the plaintiff firm, was in San Angelo, Tex., at the place of business of the defendant firm, and that, while there, he and Mr. Cramer, of the defendant firm, had negotiations with reference to the wools mentioned in plaintiffs' petition, and which were subsequently shipped to plaintiffs by defendants, and against which the drafts sued on were drawn; that, at the time of these negotiations, defendants were wool factors in San Angelo, Tex., also doing a general mercantile business, and had in their possession, as such factors, the wools mentioned in plaintiffs' petition and defendants' answer; that the larger portion of these wools the defendants were authorized to consign to plaintiffs; that there was a portion of these wools which the defendants were not then authorized to consign, nor to buy from their patrons; that pending the negotiations, and during the inspection of the wools by Messrs. Dwight and Cramer for the purpose of selecting the wools to be shipped, and determining how much should be advanced on each lot, Mr. Cramer advised Col. Dwight that there were certain lots of wools (designating them) which he was not authorized to consign, and which he could not ship without buying them by his (Cramer's) firm, and paying the respective owners of said lots therefor at the prices fixed thereupon by the owners, and that Col. Dwight, with the knowledge of these facts, advised Mr. Cramer to make such arrangement, and consented to receive said wools upon consignment from the defendants, and to make advances thereon, and that Cramer, for the defendants, agreed to make this arrangement, and ship said wools, and draw against them, and plaintiffs agreed to receive and handle said wools, and to make the advances thereon; that these wools so to be bought by the defendants from their patrons em-

Digitized by Google

braced almost all, if not all, of those set out in Exhibit A to the amended original answer of the defendants, and in the tabulated statement in the last count of the defendants' said answer; that, in pursuance of this understanding, these wools were taken by defendants as purchasers thereof, without the then knowledge or consent of the owners thereof, and were shipped to the plaintiffs, and drawn against, and are included in the wools mentioned in plaintiffs' petition, some of the wools so taken being included in each shipment against which the drafts were drawn, excepting the shipment referred to in the draft of date July 26, 1893, for $187.20. I further find that about thirty days after the agreement between plaintiffs and defendants, made through Dwight and Cramer, was reached, the defendants paid the respective owners of said wools the prices fixed by said owners upon said wools, respectively. The same was the full market price thereof. I further find that there was no intention on the part of either Mr. Cramer or Col. Dwight, or any of the plaintiffs or defendants, to defraud or take any advantage of any of the owners of said lots of wool. It is not shown that the defendants had any written authority from the owners of any of said wools to reconsign them or to buy them. It is shown affirmatively that, as to a number of said lots of wool, they had no such authority, either written or verbal.

Conclusions of Law.

In view of the foregoing findings of fact, judgment is rendered in favor of plaintiffs against the defendants for the sum of two thousand eight hundred and twelve and 64-100 dollars and costs of suit. This, the 11th day of July, 1896, as of the 10th day of July, 1896.

S. R. Fisher and J. C. Townes, for plaintiffs in error.

At common law a factor has no authority to purchase for himself goods consigned to him for sale, or to use such goods in any way for his own benefit. Kaufmann v. Beasley, 54 Tex. 563; McCreary v. Gaines, 55 Tex. 485; Wootters v. Kauffman, 67 Tex. 488, 3 S. W. 465; Wooters v. Kaufman, 73 Tex. 395, 11 S. W. 390. By a statute of Texas, factors are forbidden to purchase articles consigned to them for sale or shipment without written authority from the consignor, and heavy penalties are prescribed for violation of the statute. Rev. St. 1895, art. 2432. The statute is as follows: "No factor or commission merchant to whom any cotton, sugar, produce or merchandise of any kind is consigned, for sale on commission or otherwise, shall purchase the same or reserve any interest whatever therein upon the sale of the same, either directly or indirectly, in his own name or in the name or through the instrumentality of another, for his own benefit or for the benefit of another, or as factor or agent of any other person, without express license from the owner or consignor of such cotton, sugar, produce or other merchandise, or some person authorized by him, given in writing so to do, under a penalty of forfeiture of one-half the value of the cotton, sugar, produce or other merchandise so purchased or sold, to be recovered by the owner of the same by suit before any court of competent jurisdiction in the county where the sale took place, or wherein the offending party resides."

When an act is prohibited by statute, a contract to perform or in furtherance of the prohibited act is illegal and unenforceable. Lawson, Cont. § 279; 1 Pars. Cont. 458; 1 Story, Cont. § 615; Mitchell v. Smith, 2 Am. Dec. 417. The same rule obtains where the contract is in violation of the statute, although not therein expressly declared to be void. See former authorities; also, Fowler v. Scully, 13 Am. Rep. 699; Bowman v. Phillips (Kan. Sup.) 21 Pac. 230. Where a contract originates in a transaction forbidden by statute under penalty, though it is not expressly declared void, no action will lie thereon. Former authorities; also, Seidenbender v. Charles, 8 Am. Dec. 682, and notes; Woods v. Armstrong, 25 Am. Rep. 671; Russell v. De Grand, 15 Mass. 35. When one is privy to the unlawful design of a party to a contract, and aids, advises, and encourages him to enter into such contract in violation of the statute, and himself agrees to do certain things in pursuance of such contract, he is particeps criminis, and cannot recover for services rendered, advances made, or losses incurred in pursuance of such contract, or in forwarding the transaction. Irwin v. Williar, 110 U. S. 510, 4 Sup. Ct. 160; Embrey v. Jemison, 131 U. S. 336, 9 Sup. Ct. 776; Harvey v. Merrill (Mass.) 22 N. E. 49; Kahn v. Walton (Ohio Sup.) 20 N. E. 203; Seeligson v. Lewis, 65 Tex. 217. A contract in violation of law is void, and the courts

Digitized by Google

will neither enforce payment, nor assist one who has paid money thereon to recover it, if both parties are in pari delicto; and, where two parties act together to enable one of them to violate the law in the furtherance of an enterprise in which both are interested, they are in pari delicto, and neither can recover from the other. See former authorities, and also Gray v. Roberts, 12 Am. Dec. 383, and note on page 385. The courts will not assist any one to derive a benefit from a violation of the law, nor render him aid to prevent loss resulting from such a cause. See former authorities, and also Suth. St. Const. §§ 335, 336, and cases cited: 9 Am. & Eng. Enc. Law, 909; Collins v. Blantern, 1 Smith, Lead. Cas. 646, and notes on pages 654–692; Benj. Sales, § 530 et seq.; Read v. Smith, 60 Tex. 379; Seeligson v. Lewis, 65 Tex. 217; Davis v. Sittig, Id. 497; Wegner v. Biering, Id. 506; Shelton v. Marshall, 16 Tex. 344; Aycock v. Braun, 66 Tex. 201, 18 S. W. 500; Rue v. Railway Co., 74 Tex. 474, 8 S. W. 533; Wheeler v. Russell, 17 Mass. 257; Smith v. Arnold, 106 Mass. 269; Prescott v. Battersby, 119 Mass. 285; Swann v. Swann, 21 Fed. 299; 19 Cent. Law J. 303. Where there is one promise based on several considerations, some of which are lawful, and others not, the law will not undertake to separate the good from the bad, but the whole contract is void and unenforceable. Foley v. Speir, 100 N. Y. 552, 558, 3 N. E. 477, and cases cited in appellees' brief and opinion of court; Bank v. King, 44 N. Y. 87; Pars. Cont. 381; Smith, Cont. (5th Ed.) 204; Chit. Cont. 56; Lawson, Cont. §§ 340, 341; Gage v. Fisher (N. D.) 65 N. W. 814; Ohio v. Board of Education, 35 Ohio St. 327; Wisner v. Bardwell, 38 Mich. 278; Raguet v. Roll, 7 Ohio, 76; Filson v. Himes, 47 Am. Dec. 422; Widoe v. Webb, 20 Ohio St. 431; Perkins v. Cummings, 2 Gray, 258; Trist v. Childs, 21 Wall. 441; Burlington, C. R. & N. Ry. Co. v. Northwestern Fuel Co., 31 Fed. 652; Gurlach v. Skinner (Kan. Sup.) 8 Pac. 257; Gage v. Fisher (N. D.) 65 N. W. 809–814; Lawson, Cont. §§ 341–343. If any part of a single consideration for one or more promises is illegal, the whole agreement is void. Lawson, Cont. § 340; Bank v. King, 44 N. Y. 87; Perkins v. Cummings, 2 Gray, 258; Bishop v. Palmer, 146 Mass. 469, 16 N. E. 299; Snyder v. Willey, 33 Mich. 483; Widoe v. Webb, 20 Ohio St. 431; Meguire v. Corwine, 101 U. S. 108–112; McQuade v. Rosecrans, 36 Ohio St. 442; Ricketts v. Harvey (Ind. Sup.) 6 N. E. 325; 3 Am. & Eng. Enc. Law, 887, and notes.

W. W. King and Oscar Bergström, for defendants in error.

The court will bear in mind that the cause of action asserted by the defendants in error requires no aid from the illegal contract between the original consignors and Jackson, Cramer & March. It will be seen by the court's conclusions of fact that the plaintiffs in error shipped the wools to the defendants in error, and, within one month of the date of the shipping, accounted to the consignors for the full price of the wool, as fixed by themselves. Therefore the act of Jackson, Cramer & March in shipping the wools may have been illegal in so far as the consignors were concerned, but the cause of action of the defendants in error requires no aid from the original transaction to establish it. The test whether a demand connected with an illegal act can be enforced is whether the plaintiff requires any aid from the illegal transaction to establish his case. The cause of action was upon drafts drawn by the plaintiffs in error upon the defendants in error, and the mere fact that they had drawn said drafts upon wools which they had shipped in violation of Texas statutes is too remote to affect the cause of action. Floyd v. Patterson, 72 Tex. 202, 10 S. W. 526; Gilliam v. Brown, 43 Miss. 641; Simpson v. Bloss, 7 Taunt. 246; Roby v. West, 4 N. H. 290; Beeston v. Beeston, 1 Exch. Div. 13; Owen v. Davis, 1 Bailey, 315. The transaction between Jackson, Cramer & March and Dwight, Skinner & Co. is independent of the transaction between Jackson, Cramer & March and their consignors. In order to sustain the case of the defendants in error, it is not necessary to go into the original transaction. That being the case, plaintiffs in error will not be permitted to set up the illegality of the original contract in order to defeat a recovery. Brooks v. Martin, 2 Wall. 70; Planters' Nat. Bank v. Union Bank, 16 Wall. 483; Sharp v. Taylor, 2 Phil. Ch. 801; Faikney v. Reynous, 4 Burrows, 2069; Petrie v. Hannay, 3 Term R. 418; De Leon v. Trevino, 49 Tex. 93; Pfeuffer v. Maltby, 54 Tex. 461.

Before PARDEE and McCORMICK, Circuit Judges, and NEWMAN, District Judge.

Digitized by Google

PER CURIAM. In the circuit court a jury was waived by stipulation in writing, and thereupon the court made a special finding of facts in the case. The errors assigned are substantially to the effect that the facts as found by the court, under the pleadings in the case, do not warrant the judgment rendered. A careful examination of the pleadings and findings satisfies us that the findings fully support the judgment, and that there is no room, under the facts as found, for the application of the maxim, "In pari delicto melior est conditio defendentis." The judgment of the circuit court is affirmed.

(78 Fed. 910.)

MATHESON v. CAMPBELL.

(Circuit Court of Appeals, Second Circuit. January 13, 1897.)

1. PATENTS—MISUSE OF CHEMICAL TERMS.
The use of "nitrate" of sodium for "nitrite" of sodium, in the specifications of a patent for a coloring compound made from coal-tar products, *held* not sufficient to invalidate the patent, it appearing that no one skilled in the art would be misled thereby, and that this particular misuse of terms was common in the earlier patents relating to the art. 69 Fed. 597, affirmed.

2. SAME—OMISSIONS FROM SPECIFICATIONS—PRODUCT PATENT.
In a patent for a coloring compound made from a coal-tar product, the omission, from the description of the specific process, of an express direction for a second diazotization, whereby an amido-azo compound is converted into a diazo-azo compound, *held* immaterial, as any one skilled in the art would understand that there was to be a second diazotization, because it was so stated in the general formula, and because a reference in the specification to a diazo-azo compound would inform any practical coal-tar manufacturer that it was necessary. 69 Fed. 597, affirmed.

3. SAME—DEFECTS IN SPECIFICATIONS—ERRORS OF SOLICITOR.
The rule that an applicant is bound by the acts of his solicitor does not require the avoidance of a patent on the theory of a fraudulent suppression or misrepresentation, where, through the solicitor's ignorance of the chemical processes involved, some changes were made in the original specifications, during the absence of the applicants in Europe, resulting in immaterial omissions and errors, which could not mislead one skilled in the art.

4. SAME—COLOR COMPOUNDS—COAL-TAR PRODUCTS.
A patent for a coloring compound made from coal-tar products should be so plain in its description that an ordinary manufacturer of aniline colors, having such ordinary knowledge as existed in this country at the date of the patent, would be enabled thereby to carry out successfully its processes. 69 Fed. 597, affirmed.

5. SAME—PRODUCTS OR COMPOSITIONS OF MATTER—IDENTIFICATION.
Every patent for a product or composition of matter must identify it so that it can be recognized aside from the description of the process for making it, or else nothing can be held to infringe which is not shown to have been made by that process.

6. SAME—TESTS OF IDENTITY.
When an alleged infringing compound fails to respond to the various specific tests of identity which the patentee himself has selected and set forth in his patent, he cannot fairly insist that it is identical with his product.

7. SAME—ACTS OF SOLICITOR.
When an identifying test has been put into a patent covering a compound or chemical product, by the solicitor, in the absence of his client, and the latter accepts the patent, and applies for no reissue on the ground of mis-

Digitized by Google

take, the court, in a suit for infringement, will not, at the patentee's instance, ignore the test altogether, as ridiculous surplusage.

8. SAME—ON REHEARING—CONSTRUCTION—VALIDITY.

The specifications of a patent for a color compound produced from coal-tar products set forth, by a general formula, as the broad invention or discovery, that any sulpho acids of any radical (a group comprising over 100 different substances), when treated according to the process described, would produce the compound of the patent. The patent then set forth, "as an example," a special process by which the compound was produced from one of these substances. In fact, only a few of the substances would produce the compound. *Held*, that the patentees were not entitled to a monopoly of all the substances which might be found, by future experiments, to produce the compound claimed; nor could the patent be construed as covering merely the particular substance used in their "example," and it was therefore void. 69 Fed. 597, reversed.

9. SAME—COLOR COMPOUNDS—COAL-TAR PRODUCTS.

The Hoffman & Weinberg patent, No. 345,901, for a naphthol-black color compound, produced from coal-tar products, construed, and *held* invalid, because it claims an invention or discovery much broader than that actually made. 69 Fed. 597, reversed.

This is an appeal from a decree of the circuit court Southern district of New York sustaining the validity of United States letters patent No. 345,901, dated July 20, 1886, to Hoffman & Weinberg, assignors to Leopold, Casella & Co., for "naphthol-black color compound," and finding infringement thereof by the appellant, John Campbell. A most exhaustive discussion of the many points raised in the case will be found in the opinions of the circuit court on the trial and upon a rehearing. They are reported in 69 Fed. 597, and 77 Fed. 280.

The patent reads as follows, the paragraphs being here numbered for convenience of reference.

"(1) Be it known that we, Meinhard Hoffman and Arthur Weinberg, both residing in Mainkur, near Frankfort on the Main, Germany, have invented certain new and useful improvements in coloring matters, of which the following specification is a full description:

"(2) The present invention relates to a new method for manufacturing blue to violet coloring matter belonging to the azo group.

"(3) We take one of the compounds corresponding to the general formula, $R(SO_3H)x—N=N—C_{10}H_6NH_2$ (a), obtained by the reaction of diazo-sulphonic acids upon alpha-naphthylamine, and convert it into the diazo-azo compound, with the necessary quantity of nitrous acid. This diazo-azo compound is then allowed to react upon naphthol or naphthol sulphonic acids in an alkaline solution.

"(4) As an example, we shall describe the process of carrying out the manufacture of the dark-blue azo coloring matter, which we call 'naphthol-black.' We dissolve thirty-five kilograms naphthylamine disulphonate of sodium in three hundred liters of water acidulated with thirty kilograms of muriatic acid, twenty one degrees Baumé, and diazotize by addition of seven kilograms of nitrate of sodium in aqueous solution at a low temperature. Thereupon eighteen kilograms of chlor-hydrate of alpha-naphthylamine dissolved in five hundred liters of water are poured into the above mixture, while constantly stirring. The diazo-azo compound thus formed is allowed to act upon a solution of thirty-six kilograms of beta-naphthol alpha-disulphonate of sodium (salt R), kept alkaline by addition of twenty kilograms ammonia, of twenty per cent. The immediately formed coloring matter separates completely by addition of common salt. It is then filtered, and is delivered to the trade as a black paste, or in solid form.

"(5) Naphthol-black produces on the fiber, in an acidulated bath, dark-blue shades. It is very soluble in water, insoluble in spirit, and dissolves in strong sulphuric acid with green color. Reducing agents destroy the color-forming alpha-naphthylamine besides other products.

"We claim, as a new product, the herein-described dye stuff or coloring matter of a black color, and capable of dyeing shades of dark blue, as set forth.

"In testimony," etc.

Digitized by Google

As a convenient preface to the use in the following opinion of technical terms, the following excerpt from the opinion of the circuit court may be consulted:

"Certain aniline colors derived from coal tar are known as 'azo compounds'; the word 'azo,' derived from 'azote,' or nitrogen, being used to show that these compounds contained nitrogen in the form of nitrous acid. Among the chemical processes used in the creation or development of coal-tar colors is that of azotization. To azotize such a color is to treat it with nitrogen. To diazotize is to unite two nitrogen atoms to a hydrocarbon radical, and to form a diazo-azo compound. A repetition of the process, or rediazotization, forms a diazo-azo compound. The general formula, $R\ (S\ O_3\ -H)x-N=N-C_{10}\ H_6\ N\ H_2$ (a), includes the sulpho acids of any radical, a group comprising a great number and variety of colors."

E. N. Dickerson, for appellant.

Henry P. Wells, for appellee.

Before WALLACE, LACOMBE, and SHIPMAN, Circuit Judges.

LACOMBE, Circuit Judge (after stating the facts). The patent, after the brief statement of invention in paragraph 2, sets forth, in paragraph 3, what has been aptly called a "general description" of the process to be followed in order to obtain the product sought to be patented, and, in paragraph 4, gives a specific description "as an example" of the process of carrying out the manufacture of the product when certain starting ingredients named therein are used. This paragraph has been aptly called the "special process."

To the validity of the patent, it is objected that the specification fails to disclose a process which will result in the product, because of errors and omissions in paragraph 4. If the directions of that paragraph are literally followed, no dye stuff of a black color, and capable of dyeing shades of dark blue, will be produced. The error consists in calling for the "addition of seven kilograms of nitrate of sodium," instead of the same quantity of "nitrite of sodium." The evidence in the case sustains the finding of the circuit court that this error is immaterial, for the reason that no one skilled in the art would be misled by the mistake, "since it was well known at the date of the patent that it was necessary to use nitrite of sodium to carry out the diazotization in the manufacture of coal-tar colors, and that the use of the word 'nitrate' for 'nitrite' was common in the earlier United States azo patents."

The omission from paragraph 4 is of any express direction for a second diazotization, whereby the amido-azo compound is converted into a diazo-azo compound. On this point, again, we concur with the judge who heard the cause in the circuit court, in the finding that this error of omission is immaterial, since any one skilled in the art would have understood that there was to have been a second diazotization, because it is so stated in the general description or formula of paragraph 3, and also because paragraph 4 itself indicates that the product of the first steps of the "special process" is to be a diazo-azo compound, which would be sufficient "to inform any practical coal-tar manufacturer that a second diazotization was necessary."

It appears that the specification as originally filed called for "nitrite" of sodium, and not "nitrate," and gave specific directions in paragraph 4 to diazotize a second time. Defendant contends that

Digitized by Google

the variance in these respects between the specification as filed and as finally amended cannot be claimed to be inadvertence, but, on the contrary, was a distinct and intentional change, and that the court should find that the patentee, for the purpose of deceiving the public, caused his specification to contain less than the whole truth relative to his invention or discovery, and should therefore hold the patent absolutely and ab initio void. Simpson v. Holliday, 13 Wkly. Rep. 577. The applicants for this patent were in Europe and their solicitor here evidently knew little, if anything, about the chemistry of azo products; and there is nothing in the record to suggest that the changes which the solicitor made were due to anything except his own ignorance, or that he had any intent to mislead or to conceal. It is not doubted that an applicant is bound by the acts of his solicitor, but this contention seems to go beyond this wholesome rule when it seeks to void a patent, upon the theory of a fraudulent concealment or fraudulent misrepresentation, because, through the solicitor's ignorance, the specifications, when describing the process of manufacture, contain some immaterial error or omission, which could not mislead a person skilled in the art.

It is next objected that the patent is void because, as is alleged, a person skilled in the art, making the corrections of error and omission above set forth, and following the special process of paragraph 4, would, nevertheless, not succeed in producing the "naphthol-black" which that paragraph asserts to be the product of such process. The issue raised upon this branch of the case is tersely stated in appellant's brief:

"The bodies referred to in the example [of the special process] are, in the first place, naphthylamine disulphonate of sodium; in the second place, the chlor-hydrate of alpha-naphthylamine; and, in the third place, beta-naphthol alpha-disulphonate of sodium (salt R). The last two terms relate only each to a single body. The words 'naphthylamine disulphonate of sodium' relate to a number of bodies. Complainant's expert says five were known at the date of the patent,—acid R, acid G, and three other acids. * * * Defendant's expert, a chemist of the highest science, * * * tried in vain to produce the coloring matter of the patent using these acids, and adding thereto the knowledge of the art as known to him. [This, of course, with the corrections above set forth.] In carrying out these experiments, he took the instruction of the art for the making of the acids he used, * * * and [with the acids thus made] entirely failed to produce the results aimed at in the patent."

Complainant's experts, on the other hand, insist that the difficulty with these experiments was that the acids used were not pure; and although they admit that the literature of the art, if followed in the manufacture of these acids, would have resulted in acids more or less loaded with impurities, they insist that one skilled in the coal-tar color art, when instructed, as he was by this patent, to take acid R, or acid G, or what not, would have understood that, before using such acid as starting material for producing an azo coloring matter, he should test it for impurities, and, when found, remove them. Upon this branch of the case, the evidence is voluminous and highly technical. The judge at circuit reviewed it at great length. It is, of course, purely a question of fact, the discussion of which need not be entered into in this opinion. The pertinent rule of law is correctly stated in appellant's brief:

Digitized by Google

"Patents [such as this] should be so plain under the statute as that an ordinary manufacturer of aniline colors, having such ordinary knowledge as would exist in this country at the date of the patent, should be enabled by the instructions of that patent to carry out successfully its processes."

The weight of evidence seems to support the findings of the trial judge that:

"It was the common practice in coal-tar factories, at the date of the patent in suit, to test the raw materials to be used in the manufacture of colors, in order to ascertain their character and degree of purity."

It appears that, when naphthylamine disulphonate of sodium is used technically pure,—i. e. not chemically pure, but only in that degree of purity which the practice of the art requires,—the reactions of the patent may be affected. It would therefore appear that the circuit court correctly found that:

"The specifications of the patent in suit are sufficient to enable a person skilled in the art to obtain the product of the patent, using the ordinary knowledge of the class of persons to whom the patent is addressed."

A much more serious objection to the validity of the patent arises by reason of what complainant's counsel calls the "effort of the inventors to protect themselves against such as might try to steal their broad discovery." Referring again to the patent, the following analysis of it is found in the testimony of complainant's experts:

"The patent in suit was the first printed publication which described a process by which a black dye could be produced from coal tar. The patentees declared their broad invention, and described it in [paragraph 3]. They said: 'If you take any sulpho acid of any radical, and treat as we direct you, you will get a color producing black.' By this declaration they opened their discovery broadly to the public, concealing nothing. Then they proceeded [paragraph 4] to take one radical naphthyl, and describe specifically the production of the black color from it. Having done so, they proceeded [paragraph 5] to describe some characteristic relations, other than their use in the art, by which they might be known and identified [the "tests" of the fifth paragraph]. Of course, with the change of the radical there is a change in the chemical composition of the product; but in the art the patent, in effect, declares that one is the equivalent of the other, and may be used as a substitute for the other, and that they are therefore technically the same."

In other words, the patentees, according to this construction of the patent, say:

"We described here a special process, whereby, with one of the general group of chemical compounds which are known as 'sulpho acids' as starting material, we produce a black dye. This, however, we give as an example, for we hereby announce to the world that we have discovered that if you take any sulpho acid of any radical, and treat it according to our process, you will get a coloring producing black; wherefore we shall insist that whatever particular sulpho acid any one may hereafter use to obtain this result is an equivalent of the one we use in the special process."

Now, the evidence shows, and it is not disputed, that the phrase "any sulpho acid of any radical"—which is the translation of the general formula, "$R\ (S\ O_3\ H)x—N{=}N—C_{10}\ H_6\ N\ H_2$ (a)"—is a very broad one, covering over 100, possibly as many as 500, different sulpho acids. It is proved and conceded that very many, in fact nearly all, of these, will not, when treated according to the patentee's process, produce the patentee's color. In other words, when the inventors said, "If you take any sulpho acid of any radical, and treat it as we direct you, you will get a color producing black," they

Digitized by Google

made a false statement. Complainant's experts insist that this would mislead no one. They say:

"The preparation of these various bodies [other than what the special process specifically names], and the tests of their capability of forming naphthol black compounds, would require several years; and therefore any one would know that the patentee had never done this, and did not mean to be so understood. * * * The patentee * * * gives a general description of the whole possible scope of his discovery, and thereby intimates that, though he cannot possibly himself have tried all the hundreds of bodies which fall under the general formula, still it is probable that many of them will fit into his process, and produce his product. But he confines his positive assertion to what he has himself actually tried, as set forth in his example; that is, the naphthylamine disulpho acids, or, rather, the sodium salts thereof."

In other words, having himself experimented only with three or four bodies out of a group of hundreds, he proposes to set himself in the pathway of future experimenters with any or all of the other bodies, and, as the result of each new experiment is disclosed, will fire away at it, calculating to "hit it if it is a deer, and miss if it is a cow." That this is precisely what is contended for is manifest from the statement, prominently set forth in appellee's brief:

"The inventors were entitled to protect themselves against such as might try to steal their broad discovery, by the general statement that many of the bodies included in the general formula might, when subjected to their process, produce naphthol-black; and that the products so produced from those that did work were the equivalents of the product resulting from the specific materials set forth in the example. Without this or something of the kind, the real invention could have been appropriated with impunity, and this pioneer patent for a most valuable discovery would have been almost valueless to the inventors."

This assertion at once suggests two criticisms: (1) The patent contains no general statement that "many of the bodies included in the general formula might," etc. The general statement is that "all such bodies will," etc. (2) The inventors did not make any such "broad discovery." They made the specific discovery that some di-sulpho acids, treated according to their process, would produce their product. The broad discovery that all sulpho acids may be thus transformed they certainly did not discover, for it is apparently undiscoverable, since most of them cannot be thus transformed by the process of the patent. Some future experimenter will have to make some new discovery, and invent some new process, before these other sulpho acids can be transformed into naphthol-black. We are referred to no authority, and know of no principle, which will sustain the complainant's contention that he can thus, in the language of the circuit court, "speculate on the equivalents of his claimed invention, and thereby oblige the public to resort to experiments in order to determine the scope of the claims of his patent."

The appellant insisted that the multifariousness of the general formula and description invalidated the whole patent; but the circuit court reached the conclusion that it could be held valid, by limiting it so as to embrace only the product of the special process, definitely stated, and applied to naphthylamine disulphonate of sodium, as specifically claimed. The argument in support of this

Digitized by Google

construction may be best stated in excerpts from the opinion below:

"The general statement may be fairly considered as a disclosure to the public of the general character and scope of the discovery, inserted merely as a help to a better comprehension of the special process of the patent. As is stated by complainant's expert, a chemist would more readily understand the process and reactions from such a graphical formula than from a general description. A comparison of said statement with the special process, and an examination of the claim, show that the general formula only describes the class of bodies to which naphthyl belongs, and covers only the first step in the reaction. It does not profess to give a resulting color product. * * * When the patentees undertake to describe the complete process, and to claim the resulting product, they confine the application of the process to a single body, and the tests and claim to a single product. It does not appear that a person skilled in the art, upon reading the patent, would have been misled into supposing that all the compounds covered by the general formula would produce the patented color, or, upon an examination of the whole patent, would have understood that it purported to describe all the bodies included under the general formula. The patentees say that 'the present invention relates to a new method for manufacturing blue to a violet coloring matter belonging to the azo group.' They then say: 'We take one of the compounds corresponding to the general formula,' etc., and treat and convert it. Then follows the special process for obtaining one of the various 'coloring matters belonging to the azo group,' namely, naphthol-black, with appropriate tests, and a claim limited to the single product of the special process upon the special body 'naphthyl.' "

Referring to the rule of interpretation that a patent must be construed in conformity with the self-imposed limitations contained in the claims, the court proceeds:

"In the case at bar the case is confined by 'the herein-described dye stuff, * * * as set forth.' The only dye stuff described is the filtered coloring matter delivered to the trade as a black paste or in solid form, of the special process. The general statement contains no reference to a product. Manifestly, the claim could not be construed to cover any body other than naphthyl of the special process, either upon the question of infringement or validity."

And the conclusion arrived at is that the patent may fairly be construed as a patent for the definite product of the special process. Such construction would, of course, naturally reduce the range of equivalents within extremely narrow limits. The conclusion we have reached as to the question of infringement, however, renders it unnecessary to decide this question of construction upon this appeal.

It must be borne in mind that, in the practical determination of questions of alleged infringement, the problem is very different when we are dealing with a chemical compound than it is when we are dealing with a machine. Such observation as the eye can give to the machine at rest and in action, illuminated by a comparison of the co-ordination of its parts with that of like parts in other machines, will be ordinarily sufficient to determine its classification. Far different is it with a chemical compound. No mere observation by the eye, supplemented even by the taste and touch, can go very far towards a solution of the problem. The same mysterious forces through whose action and reaction the compound was produced must be availed of to disintegrate and disrupt, before there can be any assurance of what it is we have be-

Digitized by Google

fore us. Hence it is that so-called "tests" are devised by those skilled in the art and science of chemistry, which, in their opinion, as experts, will reveal the secrets of the composition sufficiently to make the answer to the question positive enough to support the judgment of a court.

An inventor takes certain starting materials, and subjects them to a process he has devised. The result is a product. If he sufficiently describes the starting materials and the process in his patent, he may claim the product, being new; but, if he simply defines what he claims as the "product of his process," he might find it an extremely difficult matter to prove infringement. "Every patent for a product or composition of matter must identify it so that it can be recognized, aside from the description of the process for making it, or else nothing can be held to infringe the patent which it not made by that process." Cochrane v. Badische Anilin & Soda Fabrik, 111 U. S. 293, 4 Sup. Ct. 455. Now, there are many tests that may be applied to two bodies which are being compared in order to determine whether they are or are not identical. The number of these tests may be multiplied indefinitely, for the skill, the experience, the scientific ingenuity of the chemist, will ever devise new ones in the future, as they have the old ones in the past. Some of these tests will be of great significance; some, almost crucial; others will be of but minor importance. Their relative value, no doubt, may change as science goes sweeping on from point to point; but it must be sound law, as it is reasonable common sense, to hold that the tests of prime importance in a suit for infringement are those which the patent itself prescribes. The inventor certainly may be assumed to know what it is that he has invented. If any one is able to describe the product of his inventive skill, it is himself. He surely knows the earmarks of the thing he seeks to patent, and when, out of the multitudinous qualities which his product may exhibit under varying conditions and in different relations, he has selected and set forth in his patent a chosen few, surely these should be accepted as the distinguishing earmarks,—the characteristic stigmata of the product his patent is to cover. It may be that, after it is found that the body under investigation responds to all the tests of a patent, science may yet be able to demonstrate by other tests that, nevertheless, it is not the new product therein patented; that the patentee had selected identifying tests broader than he was entitled to, and which would cover products not within the range of his discovery. But, when the body under investigation fails to respond to the specific tests the patentee has himself selected, he certainly cannot fairly insist that it is identical with his product.

In framing the patent in suit, care was taken to avoid the difficulty pointed out in Cochrane v. Badische Anilin & Soda Fabrik, supra. Certain identifying tests were set forth, so that the inventors might be able to contend that a chemical compound which responded to them all was, prima facie at least, an infringement of their patent. The tests of the patent are:

Digitized by Google

First. The dye stuff is a black paste or in solid form; and, though the patent does not say so, this test would be fairly responded to if the black solid had been mechanically transformed into a black powder.

Second. It produces on the fiber, in an acidulated bath, dark-blue shades.

Third. It is very soluble in water.

Fourth. It is insoluble in spirit.

Fifth. It dissolves in strong sulphuric acid with green color.

Sixth. Reducing agents destroy the color-forming alpha-naphthylamine besides other products.

The dye stuff as to which it is to be determined whether or not it infringes is the dye stuff sold by defendant, of which a can was, by stipulation, put in evidence, as "Complainant's Exhibit, Defendant's Color." There is no evidence at all in the case by what process the dye stuff was made. Complainant therefore undertook to prove infringement by the application of "tests." His expert testified that he had applied 34 tests, and that of those tests 5 are named in the patent. We have carefully examined his enumeration of the tests he applied, and fail to find therein more than 4 of the tests of the patent, viz. the third, fourth, fifth, and second. In applying the fourth test, he used both methylic alcohol, in which it was soluble, and ethylic alcohol, in which it was not; but he evidently does not mean to imply that these are to be taken as two tests under the patent, for, if the various double and triple tests of his enumeration are to be thus split up, the list will number more than 34. The evidence supports the conclusion of the circuit court that the words "insoluble in spirit" refer to ethylic alcohol, not to methylic alcohol. To the four tests of the patent which complainant's experts applied, the defendant's dye stuff responded.

The testimony as to the first test of the patent is not very satisfactory, but, in view of the sense in which the word "black" appears to be used in this art, we are not prepared to say that defendant's color failed to respond fairly to this test. The sixth test above quoted from the patent brings up a question of construction. It reads "reducing agents destroy the color-forming alpha-naphthylamine besides other products." Even without any evidence, it is apparent that the sentence is awkwardly expressed. It seems to imply that the black paste or solid consists of alpha-naphthylamine, which forms the color, and of other products, and that reducing agents destroy them all. The proof shows conclusively (all the experts agreeing) that there is no alpha-naphthylamine in the black paste or solid. The alpha-naphthylamine perished long before the ultimate black paste of the patent appeared. Complainant's expert suggests that the sentence means that, "by reducing agents, alpha-naphthylamine, which was used to form the color of the patent in suit, and therefore in the patent is named the color-forming alpha-naphthylamine, is destroyed." But this is not materially helpful, for he says that reducing agents would not change alpha-naphthylamine at all, and he most certainly concedes that, in the ultimate product of the patent, alpha-naphthylamine does not exist as such. The sum of his testimony is that the reducing agents are to be applied to the color. In the light of

Digitized by Google

the testimony, the sentence, as it stands, is, if not meaningless, at least ambiguous. It is apparent that the awkwardness of the sentence arises from the use of the hyphen between "color" and "forming." If that were eliminated, all concede that the plain meaning of the sentence would be that reducing agents would destroy the color, and alpha-naphthylamine would be formed. And the same result would follow if the hyphen were made a little longer, so as to become a printer's dash. It is not necessary, however, to theorize upon this point, or to guess at the meaning of the sentence. It is demonstrable by evidence well recognized as competent in patent causes that the presence of the hyphen is due to a printer's error.

The file wrapper shows that as to tests the original specification read as follows:

"These new dye stuffs produce on wool and silk, in an acidulated bath, violet to dark-blue shades. They are very soluble in water, insoluble in spirits, and dissolve in strong sulphuric acid with green color. They are destroyed by reducing agents, forming alpha-naphtylendiamine besides other products."

Subsequently this part of the specification was amended so as to read as follows:

"Naphthol-black produces on the fiber, in an acidulated bath, dark-blue shades, It is very soluble in water, insoluble in spirit, and dissolves in strong sulphuric acid with green color. Reducing agents destroy the color, forming alpha-naphthylamine, besides other products."

And in this form it was allowed by the patent office. That the hyphen was inserted in the printed copies issued by the office through a printer's blunder is manifest. It is apparent, then, that the inventors prescribed, as one of the tests which would disclose the identity of any body with their product, the action of reducing agents thereon. This action must be such as to destroy the color, and form certain products. The characteristic product of those thus formed, the one which they selected as determinative under this test, they originally declared to be "alpha-naphtylendiamine." Subsequently, and before patent issued, they changed that declaration to "alpha-naphthylamine." There is no evidence that one skilled in the art would know, when he saw "alpha-naphthylamine" named as the identifying product, that it was a misnomer for "alpha-naphtylendiamine." We know no reason why they should not be held to the selection they thus declared to the public as one of the characteristic tests of their product. If this were a blunder of an ignorant solicitor, they had ample opportunity to correct it by reissue; but, having allowed it to stand in their patent, they must be held to their declaration that reducing agents will produce this result. It has been suggested that since the evidence shows that alpha-napthylamine would not be formed out of the product of the patent by reducing agents, and that persons skilled in the art would know that fact, the entire test may be rejected as nonsensical surplusage. But there must be some limit to a court's functions in rewriting patents. Assuming that all the imperfections in this patent were due to an ignorant solicitor, remote from his clients,—and it may be noted that there is no evi-

Digitized by Google

dence of this,—it does not follow that all should be disregarded. We held, as to the error and omission of paragraph 4, that the omission was really supplied elsewhere in the patent; that the error was harmless, since the skilled workman would himself substitute "nitrite" for "nitrate"; and that, although the error must stand in the patent where the patentee's careless solicitor had placed it, we would not infer from its presence that it was due to a fraudulent design to mislead, formed and carried out by the patentees. But here there has been an identifying test put into the patent by the solicitor; the patentee accepts such patent, and applies for no reissue, alleging no mistake; and the court is asked to strike out the test altogether, as ridiculous surplusage. In the absence of any authority for such action, we are unwilling to establish the precedent. By what their solicitors do, patentees should abide. If they are dissatisfied with the letters patent their solicitors obtain, they may, in proper cases, apply for a reissue; but, when they accept their original patents without objection, they must be assumed to have assented to such changes as were made by their solicitors in specification or claim while their application was on its way through the patent office.

When the defendant's coloring matter is treated with reducing agents, it is destroyed, but no alpha-naphthylamine is formed. We have, then, a case where the inventor has prescribed six tests in his patent, and an alleged infringing body responds to five of them, but fails to respond to the sixth. Manifestly, it is not absolutely identical with the product of the patent, as the inventor has defined that product by distinguishing characteristics. It may be that the variance results from some immaterial change in the process, from the use of starting material, which is within the fair range of equivalents; but, having failed to prove identity by the prescribed tests, the burden is on the holder of the patent to show that the variances in process are immaterial, or the starting materials equivalents of those of the patents. There being no such proof here, the complainant must stand or fall by the results of the tests of the patent; and, since the defendant's color does not respond to these, it cannot be held to be an infringement. The conclusion thus reached renders it unnecessary to discuss the other points raised in the case. The decree of the circuit court is reversed, with costs, and cause remanded, with instructions to dismiss the bill.

On Rehearing.

PER CURIAM. In the patent, as it was finally amended in the patent office, and in the form in which that office notified the patentees that it was prepared to issue it upon payment of the fees, the sixth test was phrased as follows: "Reducing agents destroy the color, forming alpha-naphthylamine besides other products." In the printed copies as they were subsequently issued, the same test is phrased as follows: "Reducing agents destroy the color-forming alpha-naphthylamine besides other products." The record does not disclose which of these forms appeared in the original letters patent,

Digitized by Google

"issued in the name of the United States of America under the seal of the patent office, and signed by the secretary of the interior, and countersigned by the commissioner of patents," as provided in section 4884 of the United States Revised Statutes. We assumed, perhaps erroneously, that the original letters patent conformed to the text of the amendments as allowed; but, if such original letters patent were phrased in the alternative, the situation is not materially changed. In the brief filed with this petition, it is asserted that the statement, "Reducing agents destroy the color-forming alpha-naphthylamine besides other products," is not untrue as to either complainant's or defendant's color. We do not find this assertion to be supported by the proof. The complainant's expert did, under cross-examination, make the following statements:

"My view is that by reducing agents alpha-naphthylamine, which was used to form the color of the patent in suit, and therefore in the patent is named the color-forming alpha-naphthylamine, is destroyed."

"Your interpretation that reducing agents are applied to the color is the right one. The meaning of this sentence is very clear. Reducing agents are applied to the color. The reaction which takes place destroys the alpha-naphthylamine besides other products."

"Alpha-naphthylamine is the most characteristic constituent of the so-called 'naphthol-black color compound.' Therefore that sentence, perhaps only to emphasize that alpha-naphthylamine is so important in the process, states that alpha-naphthylamine is destroyed by the reduction process."

None of these accurately states the fact. It is not true that any "alpha-naphthylamine is destroyed by reducing agents," nor that "the reaction which takes place [when reducing agents are applied to the product] destroys the alpha-naphthylamine," nor that "alpha-naphthylamine, * * * the most characteristic constituent of the * * * compound, * * * is destroyed by the reduction process," for the very good reason, as pointed out in the original opinion, that the alpha-naphthylamine had ceased to exist before the product was obtained, having perished in the process of chemical combination which gave birth to the product. Certainly, in defendant's color there is no alpha-naphthylamine for reducing agents to destroy. If the same is true of a color produced according to the "example" set forth in the patent, as the evidence shows, then the sixth test is a false one, and must have been known to the patentees to be a false one when they received their patent. Their proper course would have been to correct this false statement by reissue.

Inasmuch as complainant now contends that a highly meritorious discovery and a patent otherwise valid has been wrecked by holding the inventors to a rigid construction of tests which they were under no obligation to insert in their specification, it may be appropriate to decide the question, which was not passed upon in the original opinion. It was contended that although the patent could not be sustained for the broad discovery set forth in the specification, that "any sulpho acid of any radical," when treated according to the process described, would give the result indicated, because no such broad discovery had been made, it might yet be valid for the definite product of a special process set forth in the specification as an "example." Reference may be had to our former

Digitized by Google

opinion for a brief statement of the argument in support of this contention. A majority of this court, whose opinion is hereinafter set forth, are unable to assent to the conclusion sought to be sustained. To do so would be practically to rewrite the patent. Such a restriction of it to the product of the special process conforms neither to what the patentees have asserted to be their invention, nor to what they undertook to claim. Even upon this appeal it was still insisted by their counsel that their patent covers such sulpho acids of the general formula as might, when subjected to their process, produce naphthol-black. Their expert advanced this theory of a narrow construction only as a last resource, when the inherent defects of the patent were made apparent. We are unable to find in the patent or elsewhere any evidence that paragraph 3 was inserted merely as a "help to a better comprehension of the special process." On the contrary, it is the special process which is given "as an example" or helpful elucidation of the general process. Moreover, the statement is hardly accurate that paragraph 3 "only describes the class of bodies to which naphthol belongs," nor are we able to see that it "covers only the first step in the reaction." Manifestly, it does more than describe a class of bodies; it gives a recipe:

"First. Take one of a group of compounds which have been obtained by the reaction of certain acids upon a named substance. Second. Convert this into the diazo-azo compound, with a nitrous acid. Third. Take the compound thus formed, and allow it to react upon naphthol or naphthol-sulphonic acids. Fourth. Keeping it during this reaction in an alkaline solution."

And the following out of this recipe will take the experimenter from the first to the last step of the process. We do not understand from the testimony that any one skilled in the art would have any difficulty in applying the process of paragraph 3 seriatim to every sulpho acid in the group corresponding to its general formula. Certainly, he would not when further assisted as to details by the "example" given of how to treat one of this general group. That paragraph 3 states what the patentees declare to be their invention seems to us beyond doubt, and the only fair interpretation of the patent is that originally given by complainant's expert, that their invention is, broadly, the formation by their process of the product sought to be patented from any sulpho acid of any radical; any one radical being susceptible of use interchangeably with any other, being the equivalent of that other and the products of all technically the same. The evidence shows conclusively that the statement that they had discovered that "any sulpho acid of any radical," treated according to their process, would give the product they said it would, was untrue. Briefly stated, the "discovery" which the inventors profess to disclose is that all mono-sulpho acids and all di-sulpho acids, treated in a prescribed way, will give a specific result; while the fact is that, so far as appears, no mono-sulpho acid thus treated will give such result; and, when they professed thus to disclose their "discovery," they either knew that the mono-sulpho acids will not give such result, or else knew nothing about the reaction of mono-sulpho acids under such process. In

Digitized by Google

either case the "discovery" which they disclosed is not the "discovery" they made, and it is for the discovery or invention which the patentee makes and discloses that patent issues. Petition for rehearing is denied.

(78 Fed. 839.)

BARTLETT v. AMBROSE et al.

(Circuit Court of Appeals, Fourth Circuit. February 11, 1897.)

No. 189.

1. TAX DEEDS—LACHES.

Laches does not grow out of the mere passage of time, but out of the inequity of permitting a claim to be enforced, arising from some change in the condition or relations of the property or parties. Accordingly, *held*, that a nonresident owner of wild lands, who had reason to suppose the taxes thereon were paid, and had delayed, for a period beyond that of the statute of limitations, to assert his claim against one who had held the lands under a tax deed, without improving them, might not be guilty of laches, although he would be barred by the statute of limitations.

2. SAME—COLOR OF TITLE—ADVERSE POSSESSION.

A tax deed, though void and based upon a void sale, if not showing invalidity on its face, is a sufficient color of title to be a foundation for adverse possession.[1]

Appeal from the Circuit Court of the United States for the District of West Virginia.

Thomas E. Davis and M. F. Stiles, for appellant.

W. P. Hubbard, B. F. Ayers, and H. P. Camden, for appellees.

Before SIMONTON, Circuit Judge, and MORRIS and BRAWLEY, District Judges.

SIMONTON, Circuit Judge. This case comes up on appeal from the circuit court of the United States for the district of West Virginia, sitting in equity. The bill of complaint was filed on 15th October, 1895, to remove a cloud on the title of real estate. The facts are these: Frederick Fickey, a resident of Baltimore, had a controversy with one Cyrus Hall with regard to land situate in the county of Ritchie, W. Va. He employed, as his attorney to conduct the controversy, John R. Kenly, a lawyer residing in the same city of Baltimore. Kenly was to receive one-fourth of the land recovered as his fee. On 4th March, 1872, the suit was compromised, and Hall conveyed to Fickey 468 acres of the land in dispute. Thereupon, pursuant to his agreement, Fickey conveyed to Kenly, by deed dated 19th April, 1872, 117 acres of the land so conveyed to him by Hall,—just one-fourth. The two deeds, that of Hall to Fickey, and that of Fickey to Kenly, were duly admitted to record in the same year, 1872. Both deeds conveyed the land, in each described by courses, distances, and monuments. It is said that the actual amount of land conveyed by the description in Kenly's deed was 165 acres. This is not specially important.

[1] See note at end of case.

Digitized by Google

Kenly owned no other parcel of land in Ritchie county. The land of Kenly was entered on the tax book of Ritchie county in the name of John R. Kenly as 177 acres, and was so charged with taxes for the years 1873, 1874. The taxes for 1874 were not paid, and the land was returned delinquent. On 11th October, 1875, 34 acres of this land was sold by the sheriff to Thomas Reeves, for the purpose of paying the taxes due for 1874. Reeves soon thereafter assigned his purchase to C. Ambrose. Ambrose, on 26th December, 1876, obtained a deed for these 34 acres from the clerk of the county court, and on 11th May, 1878, sold and conveyed the 34 acres to Richard Wanless, a defendant below, and one of the appellees here. Notwithstanding this sale of a part of the Kenly tract, it was still carried on the land books as 177 acres, and for the years 1875, 1876, 1877, and 1878 was charged with taxes in the name of John R. Kenly. It was again returned delinquent, and on 14th October, 1879, the entire tract of 177 acres was sold by the sheriff to C. T. Harrison and the same Richard Wanless, in order to pay these taxes. On 27th April, 1880, Wanless redeemed the 34 acres from Harrison, taking a redemption receipt, which, however, he failed to record. On 18th February, 1881, having purchased Harrison's interest in the land, he obtained a deed from the clerk of the county court for the whole tract entered in the name of Kenly, Harrison joining in the deed. When Wanless purchased the 34-acre tract, and the whole tract charged in Kenly's name, he was the owner of coterminous tracts of land, and was then and at the commencement of this suit in actual possession of them. In June, 1880, after his last purchase, Wanless extended a fence on his adjacent lands across Elm run, which divided them from the Kenly tract. This extension was three rods in length, and was closed with a cross fence. The inclosure embraced 35 acres of his adjacent lands, and three-fourths of an acre of the Kenly land, and he has used this inclosure every year since then for pasture and grazing purposes. He had the Kenly tract entered in his own name on the land books, has paid the taxes annually thereon, claims to have exercised ownership over the whole tract by cutting and selling the timber on it, and in 1890 leased the land for oil purposes to one Gracy, who assigned the lease to the other appellees, known as the Cairo Oil Company. In 1894 this company began operations, and were drilling a well when this suit began. In the meantime the whole tract of 463 acres, conveyed by Hall to Fickey, was placed by the assessor in 1873 on the land books in the name of Fickey, and taxes were assessed thereon. This was continued from that time to the year 1889, all the 463 acres being entered each year, except in the years 1883 and 1884, when the land was put down as 351 acres. Fickey paid the taxes each year in his own name on the whole tract, including the 117 acres he had conveyed to Kenly. He had an agent looking after his own interests, and not expressly charged, however, with Kenly's interest. In 1890 Fickey directed that the 117 acres should be deducted from the lands entered in his name. In 1891 Kenly died. No tax was paid by him or his representatives after that on these 117 acres. In December, 1894,

Digitized by Google

the heirs at law of Kenly conveyed the tract of 117 acres to the complainant (appellant here). In 1895 appellant posted the land, claiming as owner, and soon after filed this bill to remove the cloud from his title. A temporary injunction was granted. Answers were filed. The cause was heard on its merits. The injunction was dissolved, and the bill dismissed. The cause is here on errors assigned. These present important questions: Has the complainant by laches deprived himself of the right to relief at the hands of a court of equity? Has the complainant forfeited all title to the land because of its omission from the land books? Are the tax deeds under which the defendants claim title valid? Has the claim of the defendants ripened into title by virtue of adverse possession? Is the Cairo Oil Company protected in its possession under the special laws of West Virginia? These questions have been argued before us.

Laches.

Whether a party has lost his right to come into a court of equity does not depend upon the lapse of time, but upon the question whether, during this time, such changes and circumstances have taken place as made it inequitable to recognize the claim of the party asserting title.

In Galliher v. Cadwell, 145 U. S. 368, 12 Sup. Ct. 873, the court says:

"Laches does not, like limitation, grow out of the mere passage of time. It is founded upon the inequity of permitting the claim to be enforced, an inequity founded upon some change in the condition or relations of the property or parties."

So, also, in Alsop v. Riker, 155 U. S., at page 461, 15 Sup. Ct., at page 167, we find the doctrine thus expressed:

"Equity, in the exercise of its inherent power to do justice between the parties, will, when justice demands it, refuse relief even if the time elapsed without suit is less than that prescribed by the statute of limitations. [Quoting many authorities.] The length of time during which a party neglects the assertion of his rights, which must pass in order to show laches, varies with the peculiar circumstances of each case, and is not, like the matter of limitations, subject to an arbitrary rule. It is an equitable defense, controlled by equitable considerations; and the lapse of time must be so great, and the relations of the defendant to these rights such, that it would be inequitable to permit the plaintiff now to assert them."

See, also, Gildersleeve v. Mining Co., 161 U. S. 578, 16 Sup. Ct. 663.

In this case these equitable considerations do not exist. The lands in question were what are known as wild lands,—lands not in cultivation. The appellant has very recently acquired his title. Kenly, under whom he claims, was a nonresident of the state, and up to 1890 the taxes on this land which he claimed had been paid regularly by his grantor. Wanless got the lands at a tax sale, which itself was a strong intimation of the existence of an adverse title. No improvements have been made on the lands, and no expenditure of money thereon, except by the Cairo Oil Company, whose rights stand on a different footing from those of the other defendants. Wanless purchased at tax sales. Upon the deeds obtained from those sales, and upon his possession, he must stand

Digitized by Google

or fall. He has no special claim upon the protection of a court of equity. A crucial question in the case, therefore, is that made under the statute of limitations. But, although statutes of limitations strictly do not bind courts of equity, they will use the analogy of the statute, and will recognize rights acquired thereunder.

Are the Defendants Protected by the Statutory Bar?

Wanless obtained, in 1881, a deed for a whole tract of 177 acres, described by metes and bounds, and placed that deed on record. Assuming for the sake of argument that the tax sale was void, and the deed under it void also, can this operate as color of title?

In Pillow v. Roberts, 13 How. 477, the supreme court says:

"Statutes of limitation are founded on sound policy. They are statutes of repose, and should not be evaded by a forced construction. The possession which is protected by them must be adverse and hostile to that of the true owner. It is not necessary that he who claims their protection should have a good title, or any title but possession. A wrongful possession, obtained by a forcible ouster of the lawful owner, will amount to a disseisin, and the statute will protect the disseisor. One who enters upon a vacant possession, claiming for himself upon any pretense or color of title, is equally protected with the forcible disseisor. Statutes of limitation would be of little use if they protected those only who could otherwise show an indefeasible title to the land. Hence color of title, even under a void and worthless deed, has always been received as evidence that the person in possession claims for himself, and, of course, adversely to all the world. A person in possession of land, clearing, improving, and building on it, and receiving the profits to his own use, under a claim of title, is not bound to show a forcible ouster of the true owner in order to evade the presumption that his possession is not hostile or adverse to him. Color of title is received in evidence for the purpose of showing the possession to be adverse, and it is difficult to apprehend why evidence offered and competent to prove that fact should be rejected till the fact is otherwise proven."

And commenting on a law of the state of Arkansas, creating a bar as to tax titles after five years, the court add:

"In order to entitle the defendant to set up the bar of this statute, after five years' adverse possession, he had only to show that he and those under whom he claimed held under a deed from a collector of the revenue of lands sold for the nonpayment of taxes. He was not bound to show that all the requisitions of the law had been complied with in order to make the deed a valid and indefeasible conveyance to the title. If the court should require such proof before a defendant could have the benefit of this law, it would require him to show that he had no need of the protection of the statute before he could be entitled to it. Such a construction would annul the act altogether, which was evidently intended to save the defendant from the difficulty, after such a length of time of showing the validity of his tax title."

This case was affirmed in Wright v. Mattison, 18 How., at page 57. Nor is this doctrine overruled in Redfield v. Parks, 132 U. S. 239, 10 Sup. Ct. 83. In that case plaintiff claimed under a patent from the United States, dated 15th April, 1875. The defendant relied on his possession under color of title of a tax deed executed 11th August, 1871, upon a sale for taxes for the year 1868. The deed was executed for default of payment of taxes on land, the title to which land was in the United States, and so not liable to the tax laws of the state. The grounds of decision on this point are thus stated:

"But neither in a separate suit in a federal court, nor in an answer to an action of ejectment in a state court, can the mere occupation of the demanded premises,

Digitized by Google

by plaintiff's or defendant's, for the period prescribed by the statute of limitations of the state, be held to constitute a sufficient equity in their favor to control the legal title subsequently conveyed by the patent of the United States, without trenching upon the power of congress in the disposition of the public lands. That power cannot be defeated or obstructed by any occupation of the premises before the issue of the patent under state legislation, in whatever forum or tribunal such occupation be asserted." Quoting Gibson v. Chouteau, 13 Wall. 101; Rector v. Ashley, 6 Wall. 142; U. S. v. Thompson, 98 U. S. 486.

But the defendant in that case also set up in bar a short statute of limitation intended to protect tax titles. As to this, the court would not treat the tax deed as color of title, because on its face it showed that it was void. In this record it does not appear that the tax deed on its face showed invalidity.

In Bryant v. Groves, 24 S. E. 608, a decision by the supreme court of West Virginia, it is said to be settled law that a tax deed, though void, constitutes good color of title.

In Mullan's Adm'r v. Carper, 16 S. E. 527, 37 W. Va. 215, it is said that: "Any written instrument, however defective or imperfect, and no matter from what cause invalid, purporting to sell, transfer, or convey title to land which shows the nature and extent of the parties' claim, constitutes color of title, within the meaning of the law of adverse possession." The court add, "This has been held in many cases, especially in cases of void tax deeds," and then quotes and discusses the cases.

This principle is well established by decisions of the supreme court. "Color of title is that which in appearance is title, but which in reality is no title. No exclusive importance is to be attached to the invalidity of a colorable or apparent title if the entry or claim has been made in good faith." Wright v. Mattison, 18 How. 50; Beaver v. Taylor, 1 Wall. 637. Whenever an instrument, by apt words of transfer from grantor to grantee, whether such grantor act under the authority of judicial proceedings or otherwise, in form passes what purports to be the title, it gives color of title. Even if invalid, possession under it for the period prescribed by statute bars the right of the true owner. It is an absolute defense to the action of ejectment, and a suit in equity brought after that period will not be entertained, as it is founded on a stale claim. Hall v. Law, 102 U. S. 461. An adverse possession under a deed for land previously granted is sufficient to give title, although the deed was void. Green v. Neal, 6 Pet. 291. In Cameron v. U. S., 148 U. S. 301, 13 Sup. Ct. 595, many of these cases are recognized and affirmed.

Richard Wanless, under whom the appellees claim, obtained a deed of conveyance in fee for the whole 177 acres, February 18, 1881, and it was put on record, the deed describing the land by metes and bounds. Before that time, but after his purchase at the tax sale, he had extended his fence across Elm run, which separated this land from the contiguous lands some three rods, and inclosed the ends of the fence. He used the lands thus inclosed for his own purposes. This he did in his own right, without permission of any one, asserting title. The land was in his exclusive possession. It is true that Fickey had a man by the name of Hewitt on his land.

Digitized by Google

But the record nowhere shows any agreement between him and Kenly that he or his agents should protect Kenly's possession, nor any instructions or agreement by Kenly with Hewitt that the latter should hold possession for him. If we can infer from the action of the parties, it could easily be concluded that Fickey had not assumed any such office. His first act on getting title to his land was at once to ascertain and segregate the interest of Kenly in it by the execution of a conveyance to him in fee of his share therein. Nor does the record show that Hewitt really acted for Kenly. Wanless, besides inclosing and occupying this piece of land, under color of title of the whole tract, sold timber to one Wilson on that part of the tract outside of the fence, on the boundary line of Fickey, with the knowledge of Fickey and of his agreement. In 1890 he sold timber on the rest of the tract to Dick and Donahue, who were occupied for nine months in getting the timber out. In the same year he leased the land for oil purposes. These were acts of ownership, not fugitive trespasses. His testimony shows that Wanless, having obtained his deed, asserted title at once in the most open and public way by inclosing for his sole use a part of the land so held by him, and by disposing of the timber on the rest. He held from February, 1881, until July, 1895. The statutory bar is 10 years. This will bar relief in equity. Elmendorf v. Taylor, 10 Wheat. 152; Godden v. Kimmell, 99 U. S. 201; Hall v. Law, supra.

The other questions in the case are full of interest, but the result reached renders the consideration of them unnecessary. The decree of the circuit court is affirmed, with costs, without prejudice to any action at law the complainant may be advised to bring.

NOTE.

Tax Deeds as Color of Title.

1. "Color of Title" Defined.
2. Tax Deed, though Defective, Gives Color.
3. Tax Deed Void on Its Face.
4. Same—Good Faith of Claimant.
5. Same—Cases Holding Void Tax Deed Sufficient as Color.
6. Same—Under Special Short Statute.
7. Sale without Deed Gives no Color.

1. "COLOR OF TITLE" DEFINED.

"Color of title" is the semblance, appearance, or simulacrum of title. It may be any instrument or fact, extraneous to the act or mere will of the claimant, which has the appearance, on its face, of supporting his claim of a present title to land, but which, for some defect, in reality falls short of establishing it. Black, Law Dict. "Color of Title." And see Veal v. Robinson, 70 Ga. 809. "The courts have concurred, it is believed, without an exception, in defining 'color of title' to be that which in appearance is title, but which in reality is no title. They have equally concurred in attaching no exclusive or peculiar character or importance to the ground of the invalidity of an apparent or colorable title; the inquiry with them has been whether there was an apparent or colorable title, under which an entry or a claim has been made in good faith." Wright v. Mattison, 18 How. 50. "Color of title, according to the most approved authorities, is taken to be such title as in appearance is good and sufficient, but which in reality is not good and effectual. The paper title, to give color, must be so far prima facie good in appearance as to be consistent with the

Digitized by Google

idea of good faith on the part of the party entering under it; the inquiry being whether there existed such an apparent or colorable title, under which claim and entry could have been made in good faith, the party believing his title to be good and his claim well founded. If such color and good faith do not exist, the party's seisin must be confined to his actual possession." Baker v. Swan, 32 Md. 355. "Any instrument having a grantor and grantee, and containing a description of the lands intended to be conveyed, and apt words for their conveyance, gives color of title to the lands described. Such an instrument purports to be a conveyance of the title, and because it does not, for some reason, have that effect, it passes only color or the semblance of a title. It makes no difference whether the instrument fails to pass an absolute title because the grantor had none to convey, or had no authority in law or in fact to convey one, or whether such want of authority appears on the face of the instrument or aliunde. The instrument fails to pass an absolute title for the reason that the grantor was not possessed of some one or more of these requisites, and therefore it gives the semblance or color only of what its effect would be if they were not wanting." Brooks v. Bruyn, 35 Ill. 392. And see Mullan's Adm'r v. Carper, 37 W. Va. 215, 16 S. E. 527; Bernal v. Gleim, 33 Cal. 668; Goodson v. Brothers (Ala.) 20 South. 443. "Color of title exists wherever there is a reasonable doubt regarding the validity of an apparent title, whether such doubt arises from the circumstances under which the land is held, the identity of the land conveyed, or the construction of the instrument under which the party in possession claims his title." Cameron v. U. S., 148 U. S. 301, 13 Sup. Ct. 595.

2. Tax Deed, though Defective, Gives Color.

A deed of land given upon a sale of the same for the nonpayment of taxes, when founded upon an actual sale, made by the proper officer, and purporting by apt words to convey to the grantee named the title to the land therein described, will give color of title to the land, although it may be irregular or defective in form or substance, or be founded on proceedings so informal or irregular as not to pass the true title, provided that nothing appears on the face of the deed which is sufficient to make it a mere nullity and absolutely void. Wright v. Mattison, 18 How. 50; Pillow v. Roberts, 13 How. 472; Moore v. Brown, 11 How. 414; Cowly v. Monson, 10 Biss. 182, 5 Fed. 779; Aiken v. Ela, 62 N. H. 400; Finlay v. Cook, 54 Barb. 9; Carter v. Woolfork, 71 Md. 283, 17 Atl. 1041; Flanagan v. Grimmet, 10 Grat. 421; Lennig's Ex'rs v. White (Va.) 20 S. E. 831; Bryant v. Groves (W. Va.) 24 S. E. 605; Dillingham v. Brown, 38 Ala. 311; Rivers v. Thompson, 43 Ala. 633; Ladd v. Dubroca, 61 Ala. 25; Stovall v. Fowler, 72 Ala. 77; Doe v. Anderson, 79 Ala. 209; Michel v. Stream, 48 La. Ann. 341, 19 South. 215; Edwards v. Sims, 40 Kan. 235, 19 Pac. 710; Pillow v. Roberts, 12 Ark. 822; Cofer v. Brooks, 20 Ark. 542; Elliott v. Pearce, Id. 508; Pleasants v. Scott, 21 Ark. 374; Hearick v. Doe, 4 Ind. 164; Doe v. Hearick, 14 Ind. 242; Stubblefield v. Borders, 92 Ill. 279; Coleman v. Billings, 89 Ill. 190; Woodward v. Blanchard, 16 Ill. 433; Baily v. Doolittle, 24 Ill. 577; Holloway v. Clark, 27 Ill. 483; Hardin v. Crate, 78 Ill. 533; Morrison v. Norman, 47 Ill. 477; Whitney v. Stevens, 77 Ill. 585; Gage v. Hampton, 127 Ill. 87, 20 N. E. 12; City of Chicago v. Middlebrooke, 143 Ill. 265, 32 N. E. 457; Phillips v. People, 11 Ill. App. 340; Childs v. Shower, 18 Iowa, 261; Colvin v. McCune, 39 Iowa, 502; Hamilton v. Wright, 30 Iowa, 490; Railway Co. v. Allfree, 64 Iowa, 500, 20 N. W. 779; Hunt v. Gray, 76 Iowa, 268, 41 N. W. 14; Smith v. Johnson, 107 Mo. 494, 18 S. W. 21; Chapman v. Templeton, 53 Mo. 463; King v. Harrington, 18 Mich. 213; Edgerton v. Bird, 6 Wis. 527; Parish v. Eager, 15 Wis. 532; Wheeler v. Merriman, 30 Minn. 372, 15 N. W. 665; Gatling v. Lane, 17 Neb. 77, 22 N. W. 227; Webber v. Clarke, 74 Cal. 11, 15 Pac. 431. Even in the earlier cases, decided before the adoption of the various statutes which have been devised for the strengthening of tax titles, and when the accepted doctrine was that a tax deed, unless accompanied with proof of compliance with all the preliminary requisites to a valid sale, was no evidence of title, it was held that such a deed was admissible in an action of ejectment as an item of proof to show the extent of the possession claimed under it, although it was insufficient to convey title. Dresback's Lessee v. McArthur, 7 Ohio, 146; Todd v. Kauffman, 19 D. C. 304.

Digitized by Google

Where the land attempted to be sold and conveyed was exempt from taxation (as, for instance, where it belonged to a municipal corporation, the state, or even the United States), a tax deed purporting to convey it in due and regular form, as also a deed from the purchaser to a third person, will give color of title. Piatt Co. v. Goodell, 97 Ill. 84; Railway Co. v. Allfree, 64 Iowa, 500, 20 N. W. 779. Where the law of the state is such as to require a judgment against the land for the delinquent taxes, as a prerequisite to its sale, a tax deed founded upon such a sale, if fair and complete on its face, will give color of title, although the judgment was fatally irregular or defective, or though there is no record of any judgment at all. Baily v. Doolittle, 24 Ill. 577; Lewis v. Pleasants, 143 Ill. 271, 30 N. E. 323; Lewis v. Barnhardt, 43 Fed. 854, affirmed on error 145 U. S. 56, 12 Sup. Ct. 772. Want of authority in the officer who made the tax sale would invalidate the sale; yet, if the deed is regular on its face, it may found a right of adverse possession. Thus, in New York, it is held that a comptroller's deed for land sold for nonpayment of taxes, accompanied by actual possession of a part of the land and claim of title to the whole, is a sufficient foundation for an adverse possession, although the comptroller had no authority to sell. Finlay v. Cook, 54 Barb. 9. And so, though the officers charged with that duty made the fatal error of omitting the required advertisement of the sale of the land for taxes, yet, if a sale was actually made, a tax deed founded thereon, and not disclosing the want of an advertisement, may be good as color of title. Doe v. Hearick, 14 Ind. 242; Williams v. Lumber Co., 62 Fed. 558; Giddens v. Mobley, 37 La. Ann. 417. Although the land was sold on a wrong day, and under a law not applicable to lands of that character, yet if the land was liable to sale because of the delinquency of taxes thereon, and there was an actual sale by the proper officer, the tax deed gives color of title to support a claim based on adverse possession. Brougher v. Stone, 72 Miss. 647, 17 South. 509. In the case of Van Gunden v. Iron Co., 8 U. S. App. 229, 3 C. C. A. 294, and 52 Fed. 838, it was held that, although the land was actually owned by three tenants in common, and was assessed and sold for taxes in the name of one of them alone, yet if the deed purported to convey the entire tract, by metes and bounds, and the purchaser took and held possession and claimed under it, he could, by aid of the statute of limitations, acquire good title against all the former owners. But compare Howcott v. Board, 46 La. Ann. 322, 14 South. 848. A tax sale of separate tracts of land en masse, in violation of the statute, and based on an assessment not containing separate valuations for separate tracts, as required by law, and on an advertisement of sale not giving the amount of taxes due for each year, is absolutely void. Yet in a case in Alabama it was said that a tax deed based on such sale "would have been competent evidence, as color of title, to mark the boundaries and extent of the purchaser's possession, if there had been any evidence that he entered and claimed under it." National Bank of Augusta v. Baker Hill Iron Co., 108 Ala. 635, 19 South. 47. And see Johnson v. Elwood, 53 N. Y. 431. Again, although the purchaser at the tax sale was a tenant for life of the property, and, being under a legal obligation to pay the taxes, would not himself be allowed to cut out the estate of the reversioner by defaulting in the payment of the taxes and then buying in at the sale, yet one who purchases in good faith from him, as the holder of the tax title, without notice of its infirmity, will have color of title to the land as against the reversioner. Lewis v. Barnhardt, 43 Fed. 854. In Illinois, however, under the language of the statute (Rev. St. Ill. 1891, c. 83, § 4), which limits to seven years the time for beginning actions to recover land "of which any person may be possessed by actual residence thereon for seven successive years, having a connected title, in law or equity, deducible of record from any public officer authorized to sell such land for the nonpayment of taxes," it is held that a tax title based upon an affidavit showing that notice of redemption was not properly given is not sufficient title to set the statute running. In view of the peculiar wording of this section, it is considered as requiring something more than mere color of title to create the bar contemplated by the law; it requires a prima facie title. Burton v. Perry, 146 Ill. 71, 34 N. E. 60.

3. Tax Deed Void on Its Face.

If the tax deed is void on its face,—that is, if it lacks the essential elements of a good and effectual conveyance, or if it fails to comply, in matters of form

Digitized by Google

or execution, with the requirements of the statutes regulating such conveyances, or if it discloses, by its recitals, a fatal defect, omission, want of authority, illegality, or incurable irregularity in the proceedings on which it is founded,—then it is held, in several of the states, that the deed cannot serve as color of title. Keefe v. Bramhall, 3 Mackey, 551; Winstanley v. Meacham, 58 Ill. 97; Dawley v. Van Court, 21 Ill. 460; Fell v. Cessford, 26 Ill. 522; Holloway v. Clark, 27 Ill. 483; Bride v. Watt, 23 Ill. 507; Webster v. Webster, 55 Ill. 325; Wettig v. Bowman, 47 Ill. 17; Hardin v. Crate, 60 Ill. 215; Shoat v. Walker, 6 Kan. 65; Carithers v. Weaver, 7 Kan. 110; Sapp v. Morrill, 8 Kan. 677; Wofford v. McKinna, 23 Tex. 36; Kilpatrick v. Sisneros, Id. 114; Cain v. Hunt, 41 Ind. 466. Thus, in Alabama, it is held that, where the officer whose duty it is to make and execute the tax deed is authorized by the statute to make such deed only to the purchaser at the tax sale or to the assignee of the certificate of purchase, a tax deed made by him to a stranger will not constitute color of title for adverse possession. Childress v. Calloway, 76 Ala. 128. So, again, a tax deed to a partnership in its firm name, being to a grantee incapable of taking title, does not on its face purport to convey the legal title, and a subsequent purchaser from the partners cannot make it the foundation of a claim of color of title to support his possession. Burns v. Edwards, 163 Ill. 494, 45 N. E. 113. Again, in Texas, it is held that if a tax deed is void on its face for want of a description of the property, it will not even give color of title; and, if the claimant under it enters upon the possession, he has no rights save those of a mere trespasser, though even in that capacity he may found a claim to such portion of the land as he actually holds and occupies. Claiborne v. Elkins, 79 Tex. 380, 15 S. W. 395. (But it should be remembered that a description in a tax deed is sufficient to support an adverse possession by the grantee therein if, without the aid of extrinsic facts, it satisfies the mind that the land adversely occupied is embraced within the description contained in the deed. If so, the owner is notified that his possession has been invaded. Day v. Needham, 2 Tex. Civ. App. 680, 22 S. W. 103.) One of the earlier decisions of the United States supreme court is sometimes relied on as holding generally that a tax deed which is void on its face does not give color of title. Moore v. Brown, 11 How. 414. But Wayne, J., who delivered the opinion of the majority of the court, said: "We do not put the conclusion upon this point exclusively upon the fact that it is a void deed, but that it is so, being a deed made in violation of law." And Taney, C. J., and Catron, J., dissented, on the ground that such a construction of the statute would be entirely subversive of its intention and would render it nugatory. In the case of Hurd v. Brisner, 3 Wash. St. 1, 28 Pac. 371, it appeared that the assessment roll on which the tax was supposed to be founded was missing, and there was no evidence to explain its disappearance, which fact, the court held, wholly invalidated the sale. It was considered that the statute of limitations could not avail the tax purchaser, not on account of anything appearing in the deed, but because the sale was void. In Redden v. Tefft, 48 Kan. 302, 29 Pac. 157, it was held that, where one claims title to land on account of the prior possession of his grantor, and such prior possession is founded upon a fabricated and forged deed, such possession will not avail against a party who has taken actual possession of the land at about the same time under an invalid tax deed, made lasting and valuable improvements thereon, and also paid taxes on the land for many years. In Oglesby v. Hollister, 76 Cal. 136, 18 Pac. 146, it is said that, although a tax deed void on its face does not affect the title, and its record gives no notice to any one, yet receiving such a deed is an act which may be considered in determining whether one taking thereunder meant to claim adversely.

4. Same—Good Faith of Claimant.

The decisions which hold that a tax deed which is void on its face cannot constitute color of title generally rest upon the principle that an adverse possession, to be effectual, must not only be based upon a colorable title, but held in good faith by the claimant; and, if the instrument under which his claim is made shows on its own face that it is worthless, no presumption of good faith can be indulged in his favor. See Arrowsmith v. Burlingim, 4 McLean, 489, Fed. Cas. No. 563. But other cases show that this principle requires considerable modification before it can be accepted as decisive of the question. Thus, in

Digitized by Google

California, it is said that, while the claimant must enter and hold the land in good faith, believing his conveyance to be valid, and knowledge that the instrument is absolutely void will vitiate the claim of title, yet such knowledge must be actual, and not such as would arise merely from the legal construction of the instrument. Wilson v. Atkinson, 77 Cal. 485, 20 Pac. 66. And in Colorado it is held that, where a tax deed regularly executed, in form and by apt words purports to convey the land to the grantee by virtue of the legal authority vested in the grantor, the proper officer, the deed will give color of title, even though a person of legal learning and experience might, by a critical examination, discover defects in the instrument which would be fatal to its validity as a muniment of title. De Foresta v. Gast, 20 Colo. 307, 38 Pac. 244. And in Illinois this distinction is carried even further. For it is there held that bad faith, as distinguished from good faith, within the meaning of the limitation law, is not established by showing a knowledge, on the part of one holding color of title to the land, of such legal defects as would prevent his title from being absolute and valid. Where there is no actual fraud, and no proof showing that the color of title was acquired in bad faith, which means in or by fraud, the court will presume that it was acquired in good faith. Russell v. Mandell, 73 Ill. 136, citing McCagg v. Heacock, 42 Ill. 157. Actual fraud, however, will clearly prevent the starting of a claim sufficient to support the bar of the statute. For example, a tax deed executed to a partnership on a sale of lands to the firm by one of its members, acting as deputy county collector, is invalid, because a public official cannot be both seller and purchaser of the same land, and such an attempted sale amounts to a fraud on the owner; and consequently the deed will not, in the hands of the firm or of either partner, constitute "claim and color of title made in good faith" on which they could base a claim of adverse possession. Burns v. Edwards, 163 Ill. 494, 45 N. E. 113. For a similar reason, a tax deed which appears upon its face to have been altered in a material respect after its execution is not admissible in evidence to show title in the holder thereof. Miller v. Luco, 80 Cal. 257, 22 Pac. 195. Moreover, there are some cases in which a tax deed, though fair and regular on its face, may not give color of title. If there was an informality or defect in the prior proceedings which was caused by the negligence or wrongful act of the officers charged with the execution of the revenue laws, and not by the tax purchaser, his possession is not inconsistent with a claim of good faith on his part; and his title will be colorable, at least if the deed is not utterly void. But if the purchaser himself is charged by the law with some duty, before he can become entitled to a deed, of such a nature that his neglect or omission of it is a fraud upon the owner's rights, then his possession, acquired without compliance with what he is required to do, is in bad faith, and the regularity of the tax deed will not help him. Thus, if the tax purchaser is required by law to give to the owner a notice of his intention to apply for a deed, or of the expiration of the time allowed for redemption, and he procures a deed and takes possession without doing so, his holding is not in good faith, and, even though the tax deed is perfectly regular and valid on its face, he cannot avail himself of it even for the purpose of defending his possession. Dalton v. Lucas, 63 Ill. 337. But compare Miller v. Pence, 132 Ill. 149, 23 N. E. 1030.

5. SAME—CASES HOLDING VOID TAX DEED SUFFICIENT AS COLOR.

In some of the states it is settled that, when the protection of the special short statute of limitations is invoked, it is immaterial whether the tax deed is valid or void on its face, or informal or defective in substance; it will in any event give color of title. And these decisions proceed upon the ground that if it were necessary for the party to produce a regular deed, and prove compliance with all the preliminary requisites, the statute would be unnecessary, its intention defeated, and its provisions robbed of all value or benefit to the holder of the deed. Leffingwell v. Warren, 2 Black, 599; Edgerton v. Bird, 6 Wis. 527; Hill v. Kricke, 11 Wis. 442; Sprecker v. Wakeley, Id. 432; Lindsay v. Fay, 25 Wis. 460; Oconto Co. v. Jerrard, 46 Wis. 317, 50 N. W. 591; McMillan v. Wehle, 55 Wis. 685, 13 N. W. 694; Whittlesey v. Hoppenyan, 72 Wis. 140, 39 N. W. 355 (but compare Cutler v. Hurlbut, 29 Wis. 152); Mullan's Adm'r v. Carper, 37 W. Va. 215, 16 S. E. 527; Carn v. Haisley, 22 Fla. 317; Harrison v. Spencer, 90 Mich. 586, 51 N. W. 642; Ricker v. Butler, 45

Digitized by Google

Minn. 545, 48 N. W. 407; Pugh v. Youngblood, 69 Ala. 296; Doe v. Clayton, 81 Ala. 391, 2 South. 24; Ward v. Huggins, 7 Wash. 617, 32 Pac. 740. And this doctrine apparently has the sanction of the United States supreme court; for in one of its decisions it is said: "Statutes of limitation are founded on sound policy. They are statutes of repose, and should not be evaded by a forced construction. The possession which is protected by them must be adverse and hostile to that of the true owner. It is not necessary that he who claims their protection should have a good title, or any title but possession. A wrongful title, obtained by a forcible ouster of the lawful owner, will amount to a disseisin, and the statute will protect the disseisor. One who enters upon a vacant possession, claiming for himself upon any pretense or color of title, is equally protected with the forcible disseisor. Statutes of limitation would be of little use if they protected those only who could otherwise show an indefeasible title to the land. Hence color of title, even under a void and worthless deed, has always been received as evidence that the person in possession claims for himself, and, of course, adversely to all the world. A person in possession of land, clearing, improving, and building on it, and receiving the profits to his own use under a claim of title, is not bound to show a forcible ouster of the true owner, in order to evade the presumption that his possession is not hostile or adverse to him. Color of title is received in evidence for the purpose of showing the possession to be adverse, and it is difficult to apprehend why evidence offered and competent to prove that fact should be rejected until the fact is otherwise proven." Pillow v. Roberts, 13 How. 472. In the case of Edgerton v. Bird, 6 Wis. 527, the court held that the tax deed offered in support of the claim of adverse possession was void on its face because (1) the officer who executed it named himself as grantor instead of the territory of Wisconsin, and because (2) it did not purport actually to convey the premises to the grantee, but only recited that the land had been sold to him. Nevertheless it was held that the deed was admissible as color of title. In Smith v. Shattuck, 12 Or. 362, 7 Pac. 335, it is held that, although the tax deed does not contain any sufficient description of the premises which it purports to convey, yet it is admissible as color of title. Again, a tax deed purporting to convey an entire tract of land, though void on its face, is sufficient to give one in actual possession of a part of the tract constructive possession of the whole. Pharis v. Bayless, 122 Mo. 116, 26 S. W. 1030, citing Hickman v. Link, 97 Mo. 482, 488, 10 S. W. 600; Allen v. Mansfield, 108 Mo. 343, 18 S. W. 901. In the case of Reusens v. Lawson, 91 Va. 226, 21 S. E. 347, the tax deed was held defective because there was nothing to show that the person who executed it had authority to do so, and because the grantee, who was not the purchaser at the tax sale, was not shown to have succeeded to the rights of the latter. But it was held that the deed gave color of title; for "it is immaterial whether an adversary possession under a claim or color of title be under a good or bad, a legal or equitable, title." Again, although the recital of the tax deed in respect to the quantity of land sold and conveyed differs from that of the official record of the sale, yet the deed, as color of title to the whole of the land described in it, is sufficient. Doe v. Clayton, 81 Ala. 391, 2 South. 24. In Stevens v. Johnson, 55 N. H. 405, where the tax deed was void for uncertainty in the description of the property, and the grantee conveyed to a stranger, using the same description, it was held that the latter conveyance furnished color of title to such stranger. And see Minot v. Brooks, 16 N. H. 374. But a person claiming under a void tax deed has no color of title until after the delivery of the deed to the recorder to be recorded. Nye v. Alfter, 127 Mo. 529, 30 S. W. 186. And in Nebraska it is said that, if the tax deed is void on its face, it cannot be made available, and is not admissible in evidence, in an action by the holder thereof to quiet his title to the land as against the original owner. Merriam v. Dovey, 25 Neb. 618, 41 N. W. 550.

6. Same—Under Special Short Statute.

In several of the states it appears to be the accepted doctrine that, although a tax deed which is void on its face may constitute color of title under the general statute of limitations applicable to real property, yet it will not have that effect under the special short statute of limitations provided for the security of tax titles. Bartlett v. Kauder, 97 Mo. 356, 11 S. W. 67; Mason v. Crowder, 85 Mo. 526; Kinney v. Forsythe, 96 Mo. 414, 9 S. W. 918; Gatling

Digitized by Google

v. Lane, 17 Neb. 77, 22 N. W. 227; Lantry v. Parker, 37 Neb. 353, 55 N. W. 962; Redfield v. Parks, 132 U. S. 239, 10 Sup. Ct. 83 (a case from Arkansas); Cutler v. Hurlbut, 29 Wis. 152. Thus, in Nebraska, where the statutes of the state require that a deed of land for taxes shall be authenticated by the seal of the county, and this is omitted, it is held that, for lack of conformity to this requirement, the deed is void, and that it cannot be admitted even as showing a colorable title, under the special short statute of limitations relating to tax titles. Sutton v. Stone, 4 Neb. 319; Alexander v. Wilcox, 30 Neb. 793, 47 N. W. 81. But in the same state, as appears from a decision of the United States supreme court, a tax deed which is open to this fatal objection is sufficient color of title to support an adverse possession under the general limitation law. Deputron v. Young, 134 U. S. 241, 10 Sup. Ct. 539.

7. SALE WITHOUT DEED GIVES NO COLOR.

No instrument will be sufficient to constitute color of title which does not purport on its face actually to convey the title. A paper which makes no other pretensions than merely to contain an executory agreement to convey title to land at a future time does not answer this requirement and will not avail as color of title. Osterman v. Baldwin, 6 Wall. 116; O'Mulcahy v. Florer, 27 Minn. 449, 8 N. W. 166. For this reason the certificate of sale given to a tax purchaser, not professing to convey the title to him, but merely reciting the facts of the sale and stating when he will become entitled to a deed, will not give him color of title. McKeighan v. Hopkins, 14 Neb. 361, 15 N. W. 711; Bride v. Watt, 23 Ill. 507. And for an even stronger reason it is held that a mere sale of the land by a collector of taxes, without any deed, will not give the purchaser anything which may be relied on as color of title. Annan v. Baker, 49 N. H. 161; Langdon v. Templeton, 66 Vt. 173, 28 Atl. 866. But in California it is held that a deed to a tenant in possession, by one who has purchased the premises at a tax sale, but to whom no tax deed has been issued, gives such tenant color of title. Millett v. Lagomarsino, 107 Cal. 102, 40 Pac. 25. In New York, where the collection of taxes is enforced, not by an outright sale of the delinquent lands, but by a lease of the same to the successful bidder for a term of years, it is held that no adverse possession of such lands can be established under such a lease. King v. Townshend, 141 N. Y. 358, 36 N. E. 513; Sanders v. Riedinger, 19 Misc. Rep. 289, 43 N. Y. Supp. 127. From the nature of the case, a claimant of land under a tax deed has color of title only from the date of the deed, and not from the day of the sale. De Graw v. Taylor, 37 Mo. 310.

H. CAMPBELL BLACK.

(78 Fed. 923.)

BEACH v. INMAN et al.

(Circuit Court of Appeals, Second Circuit. February 1, 1897.)

PATENTS—INFRINGEMENT—PAPER-BOX MACHINE.

The Beech reissue, No. 11,167, for attaching stays to the corners of paper or strawboard boxes *held* infringed by a machine using a grooved roller which was substantially the upper clamping die of the patent. 75 Fed. 840, affirmed.

Appeal from the Circuit Court of the United States for the Northern District of New York.

This was a suit in equity by Fred H. Beach against Horace Inman and others for alleged infringement of reissued letters patent No. 11,167, for a machine for attaching stays to the corners of paper or strawboard boxes. The patent was sustained in prior litigation by both the circuit court and the circuit court of appeals. See 63 Fed. 597, 18 C. C. A. 165, and 71 Fed. 420. The present suit was heard in

Digitized by Google

the circuit court on motion for a preliminary injunction, which was granted.

The following is the opinion of the circuit court:

COXE, District Judge. The first three claims of the Beach patent are involved. That the defendants' machine contains all the elements of the combinations of these claims, save one, is conceded. It does not, it is said, have the upper clamping die of the patent. In a narrow, technical sense this is true. The defendants' die moves horizontally instead of vertically, and has a roller pressure instead of that of a plunger. Both reciprocate; both cut off the stay-strip and both press it upon the box corner with sufficient force to make it stick. One has a rolling progressive cut; in the other the knife has a straight edge, which cuts across the strip synchronously as the die descends. So far as the cutting action is concerned, it is like the substitution of a circular saw for a straight saw, or a scimiter for a claymore. The character of the cut is not of the essence of the invention, and it is wholly immaterial whether a round cutter begins operations at the edge, or a straight cutter begins on the top or bottom of the stay-strip, so long as the cut is completed in time to enable the die to press the severed portion down upon the corner of the box. The same, substantially, is true of the pressing action of the two machines. It is the difference between a roller and a hammer—instruments often used interchangeably in mechanics.

The defendants' upper die is provided with a V-shaped groove around its periphery, which co-operates with the diverging faces of the lower die, and between the two dies the stay-strip is pressed into position. In principle the two machines are identical; they differ in details only. So long as the strip is made to adhere in the proper manner to the corner of the box it can make no difference whether pressure is applied uniformly to the entire adhesive surface, or by beginning the application at the side and continuing it until the desired result is accomplished. A postage stamp can be made to stick as well by passing a blotting roller over it as by pressing it down with the hand. In short the defendants accomplish the same result by equivalent means. Having in mind the broad construction placed upon the patent, the court is convinced that the defendants infringe.

The complainant is not limited to the precise mechanism shown. He is entitled to a liberal application of the doctrine of equivalents. "The first three claims are broad ones," says the circuit court of appeals, "covering the particular combinations referred to without any restriction to the details of mechanical construction. * * * The only question is whether, in view of the state of the art, Beach was entitled to appropriate as broad a combination as he has set forth in his first three claims, which cover every device for affixing stay-strips to the outside of box covers, where the operation is performed by the combined action of a feeding mechanism, a cutting mechanism and a pasting mechanism, in combination with any opposing clamping dies whose faces diverge. The circuit court sus-

Digitized by Google

tained these broad claims, and we concur in this decision." It must, therefore, be held that the changes made by the defendants are of form, and not of substance; they introduce no new function, accomplish no new result and are only such as would occur to an ingenious mechanic whose object is to produce a machine which will do the forbidden work while presenting a different appearance to the eye.

When a patentee has obtained a final decree after years of arduous litigation, it should be final in reality as well as in name. It should guard his rights against all intruders; it should be a document of the utmost value, and not a mere brutum fulmen. If, after having passed the ordeal of the courts, patents are still to be scanned with a hostile microscope, and the inartistic and, perhaps, thoughtless nomenclature of the description is to be substituted for the machine itself, an invitation is extended to infringers to begin again the work of spoliation under a new disguise. They have only to change the mechanism by substituting a new part, taking care that it shall be known by a different name from the one used by the inventor to describe the corresponding part in the patented machine, and they may proceed with impunity. When the actual invention is made clear, the inventor should not be impaled upon a sharp construction of his ill-chosen adjectives. An infringer should not escape because he is able "to evade the wording of the claims." Parts of speech should yield to parts of iron and brass. A defendant who has been pronounced in the wrong at every stage of a litigation extending over a period of eight years should be satisfied. He should stop. When he persists in producing the old article by using a machine which concededly contains all the elements of the forbidden combination, save one, the court should not be overzealous to strain the rules of equity in his behalf. The presumptions are all against him. The motion is granted.

Defendant thereupon took this appeal.

Edmund Wetmore, for appellants.

John Dane, Jr., for appellee.

Before WALLACE, LACOMBE, and SHIPMAN, Circuit Judges.

PER CURIAM. We agree with the judge who heard the motion in the circuit court that the grooved roller of defendant's machine is substantially the upper clamping die of the patent, for the mechanical reasons set forth in the opinion below. That being so, defendant's machine is an infringement, and the order of the circuit court (75 Fed. 840) is affirmed, with costs.

Digitized by Google

(78 Fed. 924.)

THE CHICAGO.

THE ALVENA.

ATLAS S. S. CO. v. THE CHICAGO.

PENNSYLVANIA R. CO. v. THE ALVENA.

(Circuit Court of Appeals, Second Circuit. February 1, 1897.)

COLLISION—FERRYBOAT—TUG AND TOW NEAR THE SLIPS, OBSTRUCTING EGRESS—CONFLICTING TESTIMONY—TUGS LIABLE—TOW DISCHARGED.

As the ferryboat C. was leaving her New York slip near a long covered pier which obstructed the view above, the tug G. having the S. S. Alvena, 275 feet long, in tow astern upon a hawser 175 feet long, suddenly appeared near the mouth of the slip. On very conflicting testimony as to the distance of the collision from the end of the pier. *Held*, that the tugs were in fault for navigating with an unwieldy tow so near the slip without excuse; and that the ferryboat was proceeding along the covered pier at moderate speed, and having reversed as soon as she was aware of the presence of the tow behind the tug was without fault.

Appeal from the District Court of the United States for the Southern District of New York.

Libels in admiralty to recover damages resulting from a collision. The following opinion was filed in the district court:

BROWN, District Judge. About half past 7 o'clock in the morning of October 28, 1895, the steam ferryboat Chicago, just as she got out of her slip at the foot of Cortlandt street on a trip to Jersey City, came in collision with the steamship Alvena, coming down a short distance outside of the piers in tow of the tugs Goodwin and Barrett. The latter was on the steamer's starboard side, and the tug Goodwin was ahead, towing upon a hawser about 175 feet long. The bow of the ferryboat, very near the center, came in collision with the stem of the steamer, doing damage to both, for which the above libels were filed. The steamer was 275 feet long. She was not under her own steam. Her navigation was in charge of the pilot of the Barrett, who was on the bridge of the steamer along with the captain.

The ferryboat gave a long whistle on leaving the bridge. About the time that whistle stopped, the Goodwin gave her one whistle, having seen the Chicago only a moment or two before. The Goodwin was then seen from the ferryboat, but not the hawser, or the Alvena, as they were obscured by the shed. On seeing the hawser a few moments later, the ferryboat reversed full speed, and got three revolutions astern at collision. The contention of the ferryboat is that the collision took place within 50 or 100 feet of the end of pier 13, called Starin's pier, which forms the upper side of the ferryboat slip. This pier is about 750 feet long by 100 feet wide, and is covered by a shed up to within about 22 feet of the outer end, which obstructs the view of boats above. The other witnesses contend that the collision was from 250 to 500 feet from the end of the pier.

Digitized by Google

If the place of collision was as near the end of Starin's pier as the ferryboat's witnesses testify, I should have no doubt that the time was insufficient for the ferryboat to avoid the collision after the tow was discoverable. The testimony as respects the distance of the collision from the end of the pier is, however, very conflicting. The greater number of witnesses are opposed to the ferryboat. But the estimates of distances are not very trustworthy. Besides the differences in the estimates themselves, there is such frequent lack of consistency in the testimony of several of the witnesses as greatly to diminish confidence in these estimates. Four witnesses on the part of the steamer and the tugs, testify that at the time of collision they could see clear water between the stern of the ferryboat and Starin's pier; and they estimate the breadth of clear water seen at from 50 to 100 feet. The ferryboat was headed at the time of collision from 2 to 4 points up river; so that if any considerable space of clear water was visible between that pier and the stern of the ferryboat at the time of collision, her bow must have been at least 200 feet outside of the pier, since the ferryboat herself is 200 feet long. I cannot give credit to the testimony of the Goodwin's captain on that point, as he could not have been in a position to see any such clear space, if there was any, if his other testimony as to his position is correct; and as respects the other witnesses below the place of collision, I am not at all sure that the space of clear water they say they saw was not between the stern and one of the shorter piers below Starin's pier.

In the very unsatisfactory state of the direct testimony as respects the distance from the piers, I am inclined to place more reliance upon what may be deduced from the testimony of the principal witnesses as to their positions, and the bearings of the vessels a little before the collision, especially as the principal witnesses are in accord on that point. The captain of the Goodwin states that when he blew a blast of one whistle to the ferryboat, he was abreast of the upper line of Starin's pier, and saw the ferryboat in the slip over the lower corner of Starin's pier, i. e. outside of the shed. He could not see the steamer over the shed. He also stated, in answer to a question by the court, that the ferryboat's bow at that time was about 100 feet inside of the outer end of Starin's pier, and heading straight for his boat, i. e. about 3 points up river. This agrees with the statement of the captain of the ferryboat that when he first saw the tug's hawser and rang to stop and reverse (which he says was 3 or 4 seconds after the Goodwin's whistle), he saw her across the lower end of Starin's pier, a little on his starboard bow—the steamboat being at that time headed about 2 points up, and her bow about 100 feet inside the end of the pier. Other witnesses place the Alvena in accord with this distance up river.

On placing models upon a diagram of that part of the shore line drawn to scale in accordance with this testimony, it becomes evident that if the Goodwin was as much as 300 feet outside of Starin's pier, the ferryboat, in order to be seen across the lower corner of Starin's pier, would have to be placed in a position which it is

Digitized by Google

impossible she could have occupied at that time. Coming out from the lower bridge, as she did, any reasonably possible position for her would not permit the Goodwin, when abreast of the upper line of Starin's pier, to be placed at the utmost more than 200 feet outside of that pier; and a distance of 150 feet or less would be much more probable, if not almost certain; and if the place of collision was also 50 feet below the lower side of Starin's pier, as some of the tug's witnesses say, the course of the tugs must have been much nearer than 150 feet from Starin's pier, in order to keep good the range on which both agree.

The witnesses Kenny and O'Neil, who were standing at the end of a float 50 feet wide, moored on the southerly side of Starin's pier, about 150 feet inside of the outer end, were in the best position of any of the disinterested witnesses to observe the exact place of the collision, and the position of the ferryboat. They could not see over the shed at all, and the Alvena would not come within range of their vision until her bow had got near the lower corner of Starin's pier. They both testify that they saw the collision, and that it was a trifle below the lower side of Starin's pier. O'Neil says it was 15 or 20 feet below; and that the ferryboat passed within about 25 feet of the corner of his float as she went out, and was headed up stream 2 or 3 points; and that the stern of the ferryboat, at the time of the collision, was inside of the pier. These witnesses had not noticed the boats until a few moments before. They were not subject to any such excitement as would hinder correct observation; and the very limited range of their vision makes it improbable that there could be much confusion in their recollection, or much liability to error. As this testimony accords with the positions required by the range before referred to, I must find that the place of collision was less than 200 feet from Starin's pier, probably not over 175 feet, if so much.

This finding further agrees with the testimony of many of the witnesses to the very short interval between the time when the Goodwin gave her whistle and the collision. With an ebb current of one or two knots, such as there must have been along the docks three hours and a half after high water, I have no doubt from the testimony that the Goodwin and Alvena were going down at the rate of upwards of 5 knots. As she traversed only about 350 feet from the time of her whistle to the collision, the interval of time would be less than three-fourths of a minute. The ferryboat had slowed soon after starting, and could not have acquired her full speed; and she reversed when the tug's hawser came in sight a few seconds after the whistle, when her bow was about 75 or 100 feet inside of the end of Starin's pier. During this interval, with the engines reversed, it is not probable that she could have moved over 250 feet.

Upon this conclusion as to the place of collision, I think the necessary result is that the Chicago must be freed from blame, and the fault be charged upon the tugs for coming down river so near to the wharves and obstructing egress from the ferry slip. Even if the collision had been 300 feet from the end of the pier, I

Digitized by Google

do not see how the tugs could have been exempted from blame. The suggestion that they gradually worked in shore to go astern first of another tow, and then of a sail lighter, is not a sufficient excuse. There is no evidence that they could not have gone farther out in the river; and the evidence shows that no serious attempt was made to regain their previous position farther from shore. A steamer like the Alvena, 275 feet long, without steam of her own, is an unwieldy tow, and there is no justification for bringing such a tow so near the slips, except some actual necessity, and that is not shown in this case.

The clear primary fault being upon the tugs, the Chicago cannot be held in fault, unless it clearly appears that she had notice of the tow, and of its dangerous character, in time to avoid collision, or that she ought by a good lookout to have seen it; and that she failed either in the observance of some specific rule, or in the exercise of reasonable prudence to avoid collision. The burden of proof in this regard, in a situation like the present, falls upon the tugs. They have not sustained that burden. The testimony of the witnesses upon the ferryboat in respect to the reversal of her engines, must be accepted, rather than the testimony of persons at a distance, as to what they think they saw in regard to the movement of her paddle wheels. The testimony of her own witnesses is also confirmed by disinterested persons in that regard. I see no reason to discredit the officers of the ferryboat as to the management of their boat from the time she left the bridge.

In the case of The Monticello, 15 Fed. 474, the ferryboat was held in fault on the finding that the boats outside the slip could have been seen from the time the former left the landing. That is not so here. The shed on the pier above obstructed the view above until the time when the Goodwin whistled and then the ferryboat's bow was nearly out of the slip. When the Goodwin first came in view, moreover, neither the hawser nor the tow could be seen. There was no danger to the Goodwin, and the ferryboat at that moment had no apparent reason for stopping; and when a little afterwards the hawser first hove in sight, which was the first notice that the Goodwin had a tow, the ferryboat's officers testify that they reversed full speed. I do not see sufficient reason to discredit that testimony. In the interval that remained before collision, three revolutions astern, to which the engineer testifies, are quite as many, considering the slower movement astern at first, as would naturally be expected. They were not sufficient to stop the way of the ferryboat before the collision. It does not appear that there was any delay in reversing after the presence of the tow was visible. There was nothing else the ferryboat could do to avoid collision. Starboarding would naturally have produced a more destructive collision, by bringing the Alvena's stem into the starboard side of the ferryboat, with greater danger to the lives of her passengers.

If the evidence warranted the finding that the ferryboat, when within 100 feet of the end of Starin's pier, was going at her full speed of 12 knots, or at nearly that rate, I should have no hesita-

Digitized by Google

tion in finding her partly to blame for this collision. Such a rate of speed in passing along a covered pier which obstructs the view of other vessels above, must be held to be most imprudent if not reckless navigation, not merely with reference to the frequent practice for vessels to come down unjustifiably near the piers, but also with reference to other vessels that, in pursuit of their legitimate right of entrance to the slips, might be approaching unseen near the piers above. And if the ferryboat was going at nearly full speed when the Goodwin, or her hawser, was first visible, the fact that she had reduced her speed to a comparatively small rate at the time of collision, which the nature of the injuries to the two boats shows to be the case, would be conclusive evidence that had she been going at the moderate speed, say of six or seven knots, as was manifestly her duty when coming along such a covered pier, she would have been wholly stopped before reaching the line of the Alvena's course, and the collision thereby avoided. But the evidence of her officers, is to the effect that after starting from the bridge under a jingle bell, she soon slowed, and proceeded under one bell only. This would give her but a moderate and justifiable speed in going out of the slip. There is not sufficient evidence, as I have said above, to discredit the officer's testimony in this regard; and the circumstances are in harmony with this testimony.

It does not appear that the captain, who was on the bridge of the Alvena, took any part in the responsibility for her navigation. Though the navigation was procured by the Alvena, and was for her benefit, and was with the acquiescence of the master, and though the damage was done by her, yet, under the existing decisions of the appellate courts in this country, as I understand them, I am not at liberty to hold the Alvena responsible, however much this result may seem to me to be impolitic and unjust, and neither in accord with the generally accepted principles of the maritime law elsewhere, nor harmonious with our own decisions as respects the liability of chartered steamers. The Doris Eckhoff, 32 Fed. 558, 560, 50 Fed. 135, and cases there cited; The Express, 46 Fed. 860, 863; Id., 3 C. C. A. 342, 52 Fed. 890.

Decrees dismissing the libel as against the Chicago and the Alvena, with costs; and decrees for the libellants against the tugs, with costs.

Chas. C. Burlingham, for the tugs.
Everett P. Wheeler, for Atlas S. S. Co.
Henry G. Ward, for Pennsylvania R. Co.

Before WALLACE and LACOMBE, Circuit Judges.

PER CURIAM. In these cases the fundamental questions are the distance of the Alvena and tugs from the piers, and the rate of speed of the ferryboat. Upon the evidence contained in the record, much of which was put in in the presence of the district judge, we concur in his conclusion that the collision was occasioned solely by the fault of the tugs in towing the Alvena so near to the slip of the ferryboat that the latter, when about to leave the slip, on discovering the tug, was unable to avoid collision by the exercise of reasonable care.

Digitized by Google

(78 Fed. 926.)

YPSILANTI DRESS-STAY MANUF'G CO. v. VAN VALKENBERG et al.

(Circuit Court of Appeals, Second Circuit. February 1, 1897.)

1. PATENTS—NOVELTY AND INVENTION—GARMENT STAYS.
   The Bowling patent (original No. 362,568, reissue No. 11,009), for improvements in stays for garments, consisting in securing the stiffening blade between sheets of rubber projecting beyond the blade both at its ends and edges, the rubber being covered with fabrics of similar dimensions, which are made to adhere thereto by pressure between warm plates, *held* void as to claim 1, for want of patentable invention, in view of the prior state of the art. 72 Fed. 277, affirmed.

2. SAME—INVENTION.
   Invention cannot be predicated of the popularity of the article alone, as the success thereof may be accounted for by superior workmanship, attractive manner of display, and the energy and ability with which it is introduced to the market. 72 Fed. 277, affirmed.

3. SAME.
   The Bowling patent No. 378,080, for an improvement upon the garment stay covered by patent No. 362,568, to the same inventor (reissue No. 11,009), *held* void for want of invention. 72 Fed. 277, affirmed.

Appeal from the Circuit Court of the United States for the Northern District of New York.

This was a bill in equity by the Ypsilanti Dress-Stay Manufacturing Company against Wells Van Valkenberg and others for alleged infringement of two patents relating to garment stays.

This action is based upon two patents granted to Enoch C. Bowling and now owned by the complainant. Both are for improvements in stays for garments. The patent principally relied on is reissue No. 11,009, dated July 2, 1889. The original, No. 362,568, is dated May 10, 1887. The specification states that it was common to form in a garment a series of pockets by stitching, into which steel or whalebone stiffeners were inserted. This method was not only expensive, but the stiffeners, being loose, soon wore through the garments and dropped out. The object of the patentee was to obviate these and other difficulties by securing the stiffening-blade between sheets of rubber projecting beyond the blade both at its ends and edges, the rubber being covered with a suitable fabric, so that when subjected to pressure between warm plates the parts adhere and a stitching edge around the stiffener is provided. The stiffening-blade may be of steel, whalebone, wood or any other suitable material. The outer covering may be of any suitable cloth. The strips of rubber between the stiffener and the outer fabric must be unvulcanized and very thin. The specification says: "The parts constituting the stay, when placed in position, are subjected to pressure between heated clamps or plates, whereby the rubber strips become softened or melted, thereby passing into the meshes of the covering fabrics around and over the stiffener, the rubber sheets joining each other, so that when congealed they form a solid mass, firmly cementing the parts together, inclosing the stiffener D within a rubber covering, thus holding said parts firmly in position between the fabrics, and when using steel for the stiffeners D the rubber prevents moisture or perspiration from the

Digitized by Google

body of the wearer from reaching the stiffener, thereby preventing the rusting of the steel, as is now common with steel stays." The first claim only is involved. It is as follows: "(1) The stay herein described, comprising the stiffening-blade D, having sheets of rubber t t lying upon each side thereof and projecting over the edges and ends of said blade, with the covering fabrics B B' having a like projection and adhering thereto, whereby a stitching-edge is provided surrounding the stiffening-blade, as and for the purposes specified." The specification and the first claim of the original and the reissue are the same. No attack is made upon the reissue, as such, so long as the controversy is confined, as it is here, to the first claim. The defenses are that the claim is anticipated, does not involve invention, and that it is not infringed by the stay manufactured by the defendants at the present time.

The second patent is No. 378,080, dated February 21, 1888. "This patent," says the complainant's brief, "differs from reissue No. 11,009 only in capping the ends of the steels before making up the stay." The patentee says in the specification: "I am aware that metallic end caps secured to the ends of stiffening-blades for corsets and stays have long been in use, and therefore do not claim, broadly, such matter; but I am not aware that stiffening-blades having such metallic end caps have heretofore been secured within a covering of fabric having interposed layers of gutta-percha tissue, with a marginal or fabric stitching-edge surrounding said protected blade and metallic end caps, whereby such blades and metallic end caps are provided with an impervious coating having an outer textile covering, the gutta-percha tissue cementing the end caps firmly to the ends of the blade and within the textile fabric coverings, whereby said metallic parts are prevented from rusting or corroding, the metallic end caps being cemented within the fabrics, thereby preventing said caps from pulling off the blade, as is common when attached in the ordinary way to the exterior of the stay, by simply pressing said caps on to the ends of the stay." The claim is for "the herein-described stay comprising the stiffening-blade having metallic end caps, and fabric coverings projecting beyond the edges and capped ends of the stiffening-blade, with interposed sheets of gutta-percha tissue, said parts adhering together and forming the textile fabric stitching-edges f f, as and for the purposes specified." The defense is that the claim is void for want of invention.

In the circuit court the following opinion was filed:

COXE, District Judge (after stating the facts). The first claim of the reissue is not for a process or method, but for a product, a new article of manufacture—a garment stay. This stay has the following features: First. A stiffening blade. Second. Two sheets of rubber, one lying on each side of the blade and projecting over its edges and ends. Third. Covering fabrics similar in dimensions to the rubber sheets and adhering thereto. Fourth. Projections sufficient to provide a stitching edge entirely around the blade. Such a stay, no matter how produced, would infringe, and such a stay, made prior to March, 1886, would anticipate.

Digitized by Google

The prior art shows a very large variety of stays. In January, 1883, Austin Kelley made a dress stay by covering a capped blade, precisely like the blade of the patent, with "gutta-percha tissue" which is concededly the equivalent for the "very thin" rubber strips of the patent. Kelley's stay was also covered with a textile fabric which was wrapped round the gutta-percha, the parts being made to adhere by heat and pressure. Kelley's object, like Bowling's, was to cover the stay so "as to exclude moisture," and provide means for fastening it securely to the garment to be stayed. Although the Kelley patent says that "a line of stitching is run near the edge of the busk, so as to pass through the four-fold outer covering, as well as the inner layer of muslin and gutta-percha," it is not contended that this is the means of attachment shown in the patent at bar. On the other hand, it can hardly be disputed that the Kelley patent shows all of the features of the Bowling stay, except the stitching edge. The complainant's brief admits this, by implication, when it says: "The Kelley stay has been brought into use only by adding the stitching edges of Bowling." In other words, if the former had shown the edges of the latter it would have been an anticipation. Other patents might be cited showing, substantially, the same combination. For instance, Brown, in 1863, described a thin strip of steel covered with a woven fabric "the inner face of which is coated with India-rubber," and the Smith specification describes the corset stay of that patent (1879) as follows:

"A is the stay; a, the interior steel portion; b, the rubber coating between the steel and the outer cloth covering, c."

References might be multiplied, but it is unnecessary. There can be no doubt that at the date of Bowling's application it was old to cover a steel busk with India-rubber, or equivalent materials, and an outer covering of cloth completely enveloping the busk, adhesion of the parts being produced by heat and pressure. It cannot, then, be disputed that the prior art shows all the features of the claim as enumerated above except the fourth, viz.: "A stitching edge entirely around the blade."

Starting with the Kelley patent, which, for present purposes, is as pertinent a reference as any, the question of patentability may be reduced to the simple proposition, did it involve invention to provide a stitching edge for Kelley's stay? It is obvious that with no assistance from the prior art the problem which Bowling had to solve was not particularly difficult. Before him was a waterproof dress stay designed to be attached to garments. The garment was there, the stay was there. How shall the stay be attached? Did it require any severe strain upon the "intuitive faculty of the mind" to suggest sewing? But it is said that not only was it necessary to think of sewing, but also to provide projections to hold the stitches. This is true, but in view of the ordinary expedients resorted to when it is desired to sew one article, through which a needle will not penetrate, to another, did it involve invention? It would seem that the weight of authority would require a negative answer. Thus far we have proceeded on the hypothesis that the prior art furnished no hint as to the manner in which rubber and

Digitized by Google

cloth covered stays might be attached to the garment by sewing, but it will be found, on examination, that the way adopted by Bowling was well known as applicable to this particular art. The Brown patent, before alluded to, describes "a selvedge of woven fabric on each side of the crinoline" by means of which it "may be sewed onto any fabric by merely stitching down the sides instead of sewing over the metallic strands." The fact that the Brown patent relates to stays for ladies' skirts instead of dress or corset stays is immaterial as they both belong to the same art. The record abundantly proves that in the eye of the patent law they are one and the same thing.

The patent to Van Orden, 1877, contains the following statement:

"The impervious covering is, preferably, made of the substance known as 'celluloid,' which is very strong and tough as well as elastic, and is sufficiently soft, or may be made so, as to permit of its being stitched through or sewed onto the cloth portion of the corset."

The patent also says, that vulcanized rubber or other plastic compound may be used, and that the stay is attached to the corset "by sewing through one or both edges of the impervious covering."

Nettleton, in 1885, described a stay having the covering material projecting at the ends. He says:

"The stitches in seams H, which pass through the portions E of the stays, are thus made to perform the additional function of securing the stays in place."

The "German stay," which was on the market long prior to 1886, shows a steel stay with a cloth covering projecting on both sides so that it may be sewn to the garment by a line of stitches through these projecting edges. It is true that this is not a waterproof stay and that the stitching edges do not extend around the ends, but it certainly shows that there was nothing new in sewing a dress stay to a garment by stitching through edges projecting at the sides, and Nettleton shows the same through end projections. The question may, therefore, be still further narrowed to the inquiry, did it require invention to provide the Kelley stay with the German and Nettleton projections? The court is constrained to answer this question in the negative. Bowling did not invent a new stay or a new means of attaching an old stay. His stay is, very likely, more convenient than any which preceded it, but the features of which it is composed were ready at his hand in the prior art. To put them together did not require the genius of the inventor, but the skill of the mechanic. The ideas were all old, their application obvious, and the result the same.

In Cluett v. Claflin, 140 U. S. 180, 11 Sup. Ct. 725, the court had before it a patent for an improvement in shirts. One of the claims was as follows:

"In combination with a shirt body, a shirt bosom bound on the outer edge with a folded and stitched binding, and attached to the shirt body by a separate line of stitching through such binding."

The court says, after stating the facts:

"What then was left for Cluett to invent? Nothing, apparently, but a separate line of stitches through the binding attaching the bosom to the shirt.

Digitized by Google

But whether a separate line of stitches shall be used for this purpose, or whether such stitches shall pass through the binding or inside of it, is obviously a question of mere convenience, involving nothing which, under a most liberal construction, could be held to be an exercise of the inventive faculty. * * * We think this case must be added to the already long list of those reported in the decisions of this court wherein the patentee has sought to obtain the monopoly of a large manufacture by a trifling deviation from ordinary and accepted methods."

The applicability of this language seems obvious. If it be not invention to bind a bosom and sew it to a shirt, it is not invention to bind a dress stay so that it may be sewn to a dress.

The popularity of the complainant's stay has been abundantly demonstrated by the proof, but, of course, invention cannot be predicated of this alone. McClain v. Ortmayer, 141 U. S. 419, 428, 12 Sup. Ct. 76; Walk. Pat. (3d Ed.) § 40. Sufficient reason for the success of the complainant's stays is found in the attractive manner in which they are displayed, their superior workmanship and the ability with which they have been introduced to the market.

Patent No. 378,080 requires but a passing comment. It seems too plain for discussion that there is no patentable novelty in adding end caps to the steel of the former patent, especially when it is conceded that end caps identical in structure had been attached to similar steels as shown in at least seven different prior patents.

The bill is dismissed.

Edmund Wetmore, for appellant.
C. H. Duell, for appellees.

Before WALLACE, LACOMBE, and SHIPMAN, Circuit Judges.

PER CURIAM. Decree of circuit court affirmed, with costs, upon the opinion of court below.

(79 Fed. 1.)

MACKAYE v. MALLORY (two cases).

(Circuit Court of Appeals, Second Circuit. February 23, 1897.)

APPEALABLE FINAL DECREES—ORDER OF REVIVAL.

An order entered in the original cause, reviving the suit in the name of complainant's administrator, is not a final appealable decree.[1]

Appeals from the Circuit Court of the United States for the Southern District of New York.

Carter & Ledyard, for appellant.
E. W. Tyler, for appellee.

Before WALLACE, LACOMBE, and SHIPMAN, Circuit Judges.

[1] As to what are final appealable decrees, see note to Trust Co. v. Madden, 17 C. C. A. 238.

Digitized by Google

WALLACE, Circuit Judge. These are appeals by the defendant from an order in each cause admitting the administratrix of the estate of Steele Mackaye, deceased, to prosecute the cause. In one cause Steele Mackaye was the complainant, and in the other he was the complainant in a cross bill. Upon his death his administratrix filed a bill of revivor in each case, and the defendant interposed an answer. In the answers the defendant alleged facts which he insisted established that during a period of about 12 years the original complainant, through negligence and laches, had wholly failed to prosecute the actions, and that the actions had been practically abandoned by the parties at the time of his death. The court below was of the opinion that the revival of the suits by the administratrix was a matter of right under section 955, Rev. St. U. S.; that the defenses alleged in the answers were unavailing; that the filing of bills of revivor was unnecessary; and that, instead of decrees upon the bills of revivor adjudging the actions to stand revived, orders should be entered to that effect in the original causes. The appellant assigns as error that the court below should have sustained the defenses set up in the answers, and should have dismissed the bills of revivor. We are of opinion that these orders cannot be reviewed except by an appeal from the final decree in the causes. Inasmuch as a bill of revivor is not an original suit, but is merely a continuance of an original suit (Clarke v. Matthewson, 12 Pet. 164), it is not clear that an order or decree thereon would be a final decision, within the meaning of section 6 of the act of congress of March 3, 1891, conferring jurisdiction upon this court to hear appeals. A decision is final, in the sense in which an appeal from it is permitted, when it decides and disposes of the whole merits of the cause as between the parties to the appeal, reserving no further questions or directions for the future judgment of the court; so that to bring the cause again before the court for decision will not be necessary. When a bill of revivor is dismissed, as this would practically determine the original cause by leaving it in a situation in which no further proceedings could be had in it, doubtless an appeal would lie in favor of the party seeking a revival; but, if the revival is allowed, the order or decree allowing it does not finally dispose of the cause, and can be reviewed, if it becomes necessary, by an appeal from the final decree therein. Buckingham v. McLean, 13 How. 150; Railroad Co. v. Soutter, 2 Wall. 520, 521. In Fretz v. Stoner, 22 Wall. 198, upon an appeal from a final decree in a cause in which a bill of revivor had been brought, the court considered the defenses which had been interposed by the answer to the bill of revivor. In Terry v. Sharon, 131 U. S. 40, 9 Sup. Ct. 705, the court held that an appeal by a defendant would lie from an order reviving a suit and admitting an executor in the place of the deceased complainant. That case is distinguishable from the present, however, in the circumstance that the original suit had passed to a final decree, and the defendant would have had no opportunity to review the order by appealing from that decree.

In the present case there was no decree upon the bills of review, and the orders are merely interlocutory orders in the cause, and are strictly analogous to an order in a suit at law entered on a suggestion

Digitized by Google

upon the record admitting the legal representative of a deceased party to continue the action. Hatfield v. Bushnell, 1 Blatchf. 393, Fed. Cas. No. 6,211.

The appeals are dismissed.

(79 Fed. 6.)

BURKE et al. v. SHORT.

(Circuit Court of Appeals, Sixth Circuit. March 2, 1897.)

1. RAILROAD FORECLOSURES—DISTRIBUTION OF PROCEEDS—BONDS AND COUPONS.
   A decree for the distribution of the proceeds of a sale under the foreclosure of a mortgage which provided that the coupons of the bonds secured by it should be preferred over the principal, directed that the surplus, after paying preferential claims, should be equally divided among the bonds, paying a certain sum, less than the face of the bond, to the holder of each bond. *Held* that, though it named only bonds, such decree could not be construed as intended to disregard the preference of the coupons, but was intended to deal with the ownership of bonds with their coupons, the holders of both being at the time the same, and, accordingly, that a holder of coupons subsequently detached, which had matured before the foreclosure, was entitled to be paid in full.
2. SAME.
   Held, further, that coupons not matured at the time of the foreclosure, though thereby merged in the principal of the bonds, were entitled, when detached and separated in ownership from the bonds, to be paid proportionately with the remainder of the principal.
3. SAME.
   Held, further, that orders permitting the withdrawal of parts of a fund deposited in court to secure the payment of certain bonds, the ownership of which was in dispute, upon the deposit of some of such bonds, contemplated the deposit of bonds with proper coupons, and where sums had been withdrawn upon the deposit of bonds without coupons, the same, so far as in excess of the amount properly due to bonds without coupons, must be refunded by the parties making such deposit.

Appeal from the Circuit Court of the United States for the Western Division of the Northern District of Ohio.

The questions for settlement arise upon an intervening petition filed by the appellee in the case of American Loan & Trust Co. v. Toledo, C. & S. Ry. Co., 47 Fed. 343. The petitioner is the owner and holder of certain interest coupons detached from mortgage bonds issued by the railway company. The object of the intervention is to obtain the payment thereof out of the proceeds of a foreclosure sale had at the instance of the American Loan & Trust Company as trustee under a mortgage made by the said railway company to secure an issue of 825 bonds for $1,000 each, bearing interest at the rate of 6 per cent., payable semiannually, for which interest coupons were attached to the bonds. By the terms of the mortgage the interest was preferred in payment over the principal. The coupons which the appellee owns are coupons detached from bonds so secured. On the 23d of June, 1887, a decree foreclosing said mortgage for the equal benefit of all holders of bonds secured thereunder was duly entered in said cause, and by said decree it was determined that the principal of said bonds was due and payable by operation of a default, under a clause in the mortgage precipitating the maturity of the principal upon default in payment of interest, though otherwise the principal would not have matured for many years. The coupons maturing January 1, 1886, July 1, 1886, and January 1, 1887, were also declared to be due and unpaid. At the sale had

Digitized by Google

under this decree the mortgaged railroad was bought by the appellants at the price of $600,000. Subsequently a decree was entered determining the ownership of the bonds presented for participation in the distribution of the proceeds of sale, wherein it was decided that all of the 825 bonds secured under the mortgage foreclosed were held and owned by the purchasers of the railroad, now the appellants, except 112, which the court found were held and owned by others. The court also found that after providing for the payment of certain receiver's debts, and all costs and expenses of foreclosure, there would be for distribution $543,442.50. This sum the court ordered should be distributed equally to each of said 825 bonds; making, as the decree recites, the sum of $658.70 "applicable on each one thousand dollar bond." This decree was entered December 20, 1890. From it and the pleadings it appears that the appellants had claimed the 112 bonds which the circuit court had decided belonged to others, and, not being content with the decree deciding this question of ownership, they prayed an appeal to the supreme court, which was granted. For the purpose of providing for the payment of the bonds whose ownership was thus disputed, the court required the purchasers to pay into court a sum of money equal to that required to pay the preferential claims, costs, and expenses, and, in addition, a sum sufficient to pay to each of the 112 bonds owned by others than the purchasers the sum of $658.70. That decree also provided that, if the appeal was perfected, the purchasers should have the option of depositing 150 of the bonds owned by them, "together with the coupons attached thereto," to be held as a security for the ultimate payment of the bonds whose ownership was involved in the appeal. The purchasers adopted the latter course, and deposited the bonds as required by the decree. Pending the appeal to the supreme court, Messrs. Burke and Hickox from time to time bought in the bonds over which the litigation was proceeding. As they did so they obtained modifications of the security order theretofore made. Among these modifications was one based upon their claim to have acquired title to some 62 of the litigated bonds. Upon this theory the former order was so modified as to permit them to withdraw from the registry of the court the bonds theretofore deposited, upon paying into court the 62 bonds so acquired by them and $50,000 in money; this sum to be held as security for the payment of $658.70 and interest from December 20, 1890, to each of the remaining bonds the ownership of which was still in dispute. Subsequently others of the disputed bonds were paid into court, as having been acquired by them, and upon that basis they were suffered to withdraw from the money so deposited, until at the time of Mrs. Short's presentation of her petition there remained in the registry of the court a sum insufficient to pay her coupons, if she was entitled to payment thereof. Upon a reference of the matters involved under her petition, it was shown that her coupons were in large part coupons maturing before the foreclosure decree, and that the remaider did not mature until thereafter, and that all of them had been detached from some of the disputed 112 bonds. It was also shown that these bonds, minus their coupons, had been bought in that condition by appellants, and, minus the coupons, had been paid into court under the modifying orders above mentioned. The fact that the coupons properly belonging to said bonds were missing when paid into court was unknown to the clerk, who received them as complete bonds. Upon this state of facts the circuit court held that Mrs. Short's coupons were entitled to be paid in full out of the proceeds of the foreclosure sale, with interest from December 20, 1890, so far as she held coupons which represented interest accrued at the date of the foreclosure decree of January 23, 1887. The court also decided that coupons maturing after that date were to be treated as part of the principal of the bond from which they had been detached, and as entitled to a ratable proportion of the pro rata properly payable upon the principal of the bond of which they were to be treated as a part. The court also held that, to the extent that the sum within the registry of the court had been inadvertently reduced by overpayments to the appellants as owners of the bonds from which these coupons had been detached, appellants should pay into the registry of the court a sum sufficient, with that now there, to pay the decree in favor of Mrs. Short, and the costs. From this decree Burke and Hickox have appealed.

Stevenson Burke, for appellants.

James Parker, for appellee.

Digitized by Google

Before TAFT and LURTON, Circuit Judges, and SAGE, District Judge.

LURTON, Circuit Judge, after stating the facts as above, delivered the opinion of the court.

Where there is a fund in court to be distributed among a class of creditors, a decree of distribution which seems to make no provision for some of the class will not ordinarily preclude any of the class, having rights similar to those of other claimants, from asserting by bill or petition their right to a share in the fund. The question of delay in filing such claim is one largely governed by the particular circumstances of the case, and by the question as to whether any of the fund remains, out of which equity may be done the tardy applicant. In re Howard, 9 Wall. 175; Williams v. Gibbes, 17 How. 239. It is unnecessary to consider how far the decree of distribution made in this case is subject to be reopened by one of the class secured by the foreclosed mortgage, inasmuch as we are of opinion that that decree, properly construed, does provide for the equal distribution of the proceeds of sale among all the beneficiaries under the mortgage. The averment of the petition that the decree of December 20, 1890, makes no provision for the payment of the interest coupons held by petitioners may be treated as an inadvertent conclusion of law, not estopping the court or the petitioner. The facts entitling her to relief are stated, and the meaning of that decree, as well as others made later, is matter of law, for legal ascertainment. If the decree of distribution is to be construed as adjudging that the proceeds of sale are to be exclusively distributed in payment of the principal of the bonds secured by the mortgage, and that holders of interest coupons are not entitled to consideration, or to any benefit of the common security, then appellee was entitled to no relief, however erroneous the decree, inasmuch as she was, at least by representation, a party to the cause in which that decree was made. Such a construction is wholly unauthorized. Conceding that her rights must depend upon the real meaning and legal effect of the decree of foreclosure, the decree of distribution, and the later orders made in the cause, we think the decree from which appellants have appealed was right. The decree of distribution, properly construed, was intended to deal with the ownership of bonds and their coupons under the general designation of "bonds." The decree of foreclosure had found that three interest coupons had matured and were unpaid. The mortgage provided for a preference of interest over principal, and it is inconceivable that the court meant that the principal should be paid in preference to the coupons, or to exclude the coupons from consideration as independent subjects of ownership. The case of a separation of a bond from its coupons was doubtless not in the mind of the court, because at that time the bonds and coupons were in the hands of the same persons. The share to be paid to each bond was insufficient to pay both principal and interest, and it was unimportant to pay one sum on account of interest and another on account of principal. Hence the order that $658.70 should be

Digitized by Google

paid "on each of said one hundred and twelve bonds, * * * with interest from December 20, 1890." This order clearly meant the bond with its proper coupons,—the coupons found thereon by the decree of foreclosure. This idea is further found in the direction of the same decree which allowed appellants to deposit 150 bonds, "with the coupons attached thereto," as a security for the payment of the distributive share due to the owners of the bonds not owned by them, when the question of ownership should be settled. The subsequent order allowing appellants to withdraw those bonds, and the later order allowing a withdrawal of the share due to bonds subsequently acquired by them, upon paying into court the bonds so purchased, contemplated a payment into court of a bond with its proper coupons, and all sums withdrawn by appellants under such orders in excess of the share properly due to a bond without its coupons were inadvertent overpayments, and should be returned to the registry of the court, as improperly obtained.

The objection to so much of the decree as is based upon coupons maturing after the decree of foreclosure is predicated upon the argument that by the decree of foreclosure the coupons not matured were merged in the bonds. This may be admitted. But it does not dispose of the question. The circuit court regarded the accrued interest at date of foreclosure as preferred over the principal, and the principal of the bond with its annexed unmatured coupons as together constituting the principal of the bond. If the owner of such a bond chose to sever the bond proper from its unearned coupons, he thereby divided the bond. The holder of the several coupons would become equitably the owner of a proportion of the bond. The court therefore treated Mrs. Short, so far as she held coupons maturing before the decree of distribution and after the foreclosure decree, as equitably entitled to that part of the dividend due on the principal of the bond represented by the proportion which the par value of the coupons bore to the par value of the bond from which it was taken. We see nothing inequitable in this. The decree must be affirmed, with costs.

(79 Fed. 10.)

PECK et al. v. ELLIOTT.

(Circuit Court of Appeals, Sixth Circuit. March 2, 1897.)

1. FEDERAL COURTS—JURISDICTION—POSSESSION OF RES—CITIZENSHIP.
   The fact that the circuit court has possession of all the assets of an insolvent corporation, for the purpose of winding up its affairs, in a suit pending in such court, gives it jurisdiction to entertain a petition, ancillary to such suit, against a debtor of the corporation, to ascertain and enforce payment of his debt, without regard to the citizenship of the parties or the amount in controversy.
2. CORPORATIONS—INCREASE OF CAPITAL.
   When the charter of a corporation or the general law under which it is incorporated does not impose any limitation upon the amount of capital

Digitized by Google

which the incorporators may venture in the business, nor require the amount of the capital to be stated in the certificate of organization, but such corporation is given power to fix by by-laws the amount of capital, the rule that there can be no implied power to increase the capital of a corporation, fixed by the charter or articles of incorporation at a definite sum, has no application; and an increase of capital, by an amendment of the by-law fixing it, is valid, and a subscriber to such increase is bound.

3. SAME—REPEAL OF STATUTE.
The provisions of section 5 of the Tennessee act of March 23, 1875 (Laws Tenn. 1875, c. 142), by which an increase of stock of a corporation is permitted by the action of the stockholders, were not repealed by the act of March 27, 1883 (Laws Tenn. 1883, c. 163).

4. SAME—TAX ON INCREASE OF STOCK—PRESUMPTIONS.
When a statute requires the payment of a tax by a corporation upon increasing its capital stock, and makes its payment a condition precedent to the exercise of corporate powers, a court, in a suit involving the validity of such an increase of stock, will presume, in the absence of proof to the contrary, that the tax has been paid.

5. SAME—ACCEPTANCE OF INCREASED STOCK—ESTOPPEL.
One who has accepted increased stock of a corporation, and has taken the office of president of such corporation by virtue alone of such stock, is estopped to question its validity, on the ground of the nonpayment of a tax required to be paid by the corporation on increasing its stock.

6. SAME—SUBSCRIPTIONS—ISSUE BELOW PAR—COLORABLE TRANSACTION.
Where increased stock of a corporation is required by the terms of the authority for the increase to be sold at par, and the corporation buys from a subscriber to the increase a patent of no value to it, for the purpose of allowing the subscriber to get his stock below par by crediting the purchase price on his subscription, and afterwards resells the patent to him for a nominal sum, such transaction, being a mere evasion of the requirements of the issue of the stock, does not entitle the subscriber to any credit on his subscription.

Appeal from the Circuit Court of the United States for the Eastern District of Tennessee.

The Southern Malleable Iron Company is a manufacturing company, incorporated in August, 1890, under the general law of Tennessee. In November, 1893, H. H. Peck and Charles D. McGuffey were appointed receivers under a bill filed in the United States circuit court for the Southern division of the Eastern district of Tennessee, by the Northern Bank of Kentucky, a judgment creditor, with a levy upon certain assets. The object of the bill was to preserve the property as an operative unit plant, collect in its debts, complete certain valuable contracts, and sell the property as a whole, including its good will, for the satisfaction of all its debts according to priority of lien. The appellants under this bill were appointed receivers, and placed in possession of all its assets of every kind. During the course of the proceedings usual to such a creditors' bill, the receivers filed a petition, alleging the total inadequacy of the assets to pay debts, and setting out that the appellee, J. M. Elliott, a director and president of the corporation, was a subscriber to the capital stock of said company to the extent of 120½ shares of $100 each, and was indebted on that account in a balance due thereon of $6,997.32, and that the insolvency of the corporation rendered it necessary that this stock liability should be enforced. Leave of court was asked to file this petition in the principal case, and that J. M. Elliott be made a defendant thereto by proper process, and for a decree against him to the extent of his unpaid stock liability. An order was accordingly made by the Honorable D. M. Key, district judge, holding the circuit court, allowing the petition to be filed, and ordering that process should issue as prayed. It may not be out of place to say that, after the filing of the original bill, other bills were filed by creditors, including one for a foreclosure of a mortgage on the property of the company made to secure an issue of bonds. Subsequently all these bills were consolidated, and ordered to proceed under the name and style of "Ross-Meehan Brake Shoe

Digitized by Google

Foundry Company v. Southern Malleable Iron Company et al." Elliott was duly made a defendant to the proceeding begun by the receivers, and filed his answer, denying the jurisdiction of the court; denying the jurisdiction to proceed against him by petition or bill in equity; and denying his liability as a stockholder. Proof was taken, and, upon a final hearing, the petition of the receivers was dismissed. 72 Fed. 957. From this decree, an appeal has been prosecuted, and errors assigned by the receivers.

Thomas McDermott, for appellants.

Geo. T. White, for appellee.

Before TAFT and LURTON, Circuit Judges, and SAGE, District Judge.

LURTON, Circuit Judge (after stating the facts as above). The jurisdiction of the court to entertain this petition of the receivers against the appellee depends upon its jurisdiction in the original case, to which this proceeding was wholly ancillary. This petition is auxiliary to the original suit. It is a petition by the receivers asking the aid of the court to enable them to collect in an asset of the corporation. It was filed by direction of the court under an order made in the principal cause. The jurisdiction of the court in the principal cause is not questioned, and cannot be in this collateral suit. Compton v. Railroad Co., 31 U. S. App. 486–529, 15 C. C. A. 397, and 68 Fed. 263; Mellen v. Iron Works, 131 U. S. 352–367, 9 Sup. Ct. 781; Lumley v. Railroad Co., 22 C. C. A. 60, 76 Fed. 66. The fact that the circuit court had possession of all the assets of the Southern Malleable Iron Company, for the purpose of winding up its affairs as an insolvent corporation, is the fact which made it admissible to bring a debtor of that corporation into the court, to the end that his debt might be ascertained and payment coerced. For the purpose of collecting in choses in action, the court might direct its receivers to institute independent suits in that or courts of the state, or cause such debtors to be made defendants in the principal cause, and determine for itself any question which might be involved by the defenses to the claim. Such a proceeding would not involve any question of citizenship, or amount in controversy, nor mode of trial. The complete jurisdiction of the court over the res, the property and assets of this corporation, involved its right to bring before it persons having possession of any of those assets, or having claims thereon, or who were indebted to it, and either itself hear and determine all controversies, or refer them to a master or to a jury, as it saw fit. A court of equity is not deprived of jurisdiction simply because a purely legal question becomes collaterally involved. It might, in its discretion, submit such controversy upon issues made to a jury, or dispose of them without doing so. That the liability of appellee was one of a legal character did not operate to defeat the jurisdiction, and bring its proceedings against him to a stand. These questions seem conclusively settled by White v. Ewing, 159 U. S. 36, 15 Sup. Ct. 1018, a case which arose upon a like proceeding in the same court, and in which certain questions were certified by this court under the court of appeals statute.

We come, then, to the merits of the case. The defense to this stock liability is that the stock subscribed for by appellee was increase

Digitized by Google

stock, and that there was no power in the corporation to increase its capital. In Tennessee, prior to 1870, all charters were granted by special legislation. Such charters, as in other states, usually defined definitely the amount of the capital stock of the company, or fixed a maximum beyond which it should not go. By article 11, § 8, of the Tennessee constitution, adopted in 1870, it is provided as follows:

"No corporation shall be created, or its powers increased or diminished, by special laws, but the general assembly shall provide by general laws for the organization of all corporations hereafter created."

The "general law" under which the Southern Malleable Iron Company was organized was approved March 23, 1875, and is chapter 142 of the Acts of Tennessee for 1875. That act prescribes a form of application to be followed whenever the corporation is one for the purposes of profit, and that the general powers of such corporations shall be those prescribed by section 5 of the act. The act contains no requirement that the application for incorporation shall anywhere state the amount of the capital stock proposed to be invested in the business. Upon the contrary, the only provision in the act of 1875 touching the matter of capital stock is found in section 5, where it is said:

"The corporation may, by by-laws, make regulations concerning the subscription for, or transfer of stock; fix upon the amount of capital to be invested in the enterprise; the division of the same into shares; the time required for payment thereof by subscribers for stock; the amount to be called for at any one time."

Judge Clark, who heard this case in the court below, was of opinion that this power should be construed as authorizing the corporation "to fix only the original or initiatory stock of the company," and that this corporation, having, by a by-law, settled upon "the amount of capital to be employed in the enterprise," was without power to subsequently increase this capital by an amendment of the by-law. He was further of opinion that the fact that Elliott, by virtue of this new stock, became a member of the corporation, a director, and its president, did not estop him from denying the validity of the new stock, although creditors of the corporation were dependent upon its collection for the satisfaction of claims presumably contracted upon the faith of the increased capital. This latter conclusion was grounded upon the proposition that, where the corporation is totally without power to increase its stock, the void act of increase cannot be adopted or ratified or the subscriber estopped in favor of creditors. Scovill v. Thayer, 105 U. S. 143. That changes in the amount of the capital stock do involve changes in organization, and in the relative relation of the original stockholders towards the corporation and each other, is very evident. That such changes cannot occur without the consent of the shareholders affected is also elementary. How such consent is to be given depends upon the organic law of the corporation. In the absence of some other binding provision in the constitution, that consent would have to be unanimous. But if the stockholder becomes such under a charter or statutory provision which subjects him, by the action of the directors or of a majority of the members of the corporation, to the liability of such change of relation growing out of an increase

Digitized by Google

of stock, he cannot complain. He has so contracted. Cook, Stocks & S. § 280; Thomp. Corp. § 78; Payson v. Withers, 5 Biss. 276, Fed. Cas. No. 10,864; Payson v. Stoever, 2 Dill. 427, Fed. Cas. No. 10,863; Railroad Co. v. Gammon, 5 Sneed, 567; Read v. Gas Co., 9 Heisk. 545–553. In the case last cited, where a large increase in the capital stock had been authorized, after the defendant in error had become a subscriber, Judge McKinney, referring to the effect upon the relative rights of original subscribers, said:

"One of the terms of his subscription was that after organization the board of directors would have the power under the charter to increase the capital stock from time to time, not exceeding one million of dollars. But [said the judge] such increase of the capital stock could work no change in the rights or liabilities of the original subscribers, for the reason that the corporation continues to be the same entity, and for the further reason that it was part of the contract of the original subscribers that the directors should have the power to increase the capital stock."

Where the capital is fixed in the charter, whether the charter be by special act of legislation, or under a general organization statute, the limit so settled by the charter itself cannot be exceeded unless authority to make an increase be plainly conferred in the charter or by statute. Railway Co. v. Allerton, 18 Wall. 236; Thomp. Corp. §§ 2076–2079; Mor. Priv. Corp. § 454; Beach, Priv. Corp. § 468. The reason is plain. Where the amount of the capital stock is definitely fixed by the charter itself, a departure therefrom would be to alter the charter itself. The general rule that the powers of a corporation are those definitely granted and those necessarily implied from the character of the business it is authorized to carry on has application to any change of the authorized capital, and no authority to alter the capital thus defined will be implied. This is the limit of the rule against the power to increase by implication, as laid down in the authorities cited above.

Mr. Morawetz, in his very carefully prepared text, states the principle thus:

"A corporation has no implied authority to alter the amount of its capital stock where the charter has definitely fixed the capital at a certain sum." Mor. Priv. Corp. § 434.

So Mr. Beach says:

"It is well settled that a corporation has no implied authority, either by resolution of the shareholders or by-law, to alter the amount of its capital stock where the charter has definitely fixed it at a certain sum." Beach, Priv. Corp. § 468.

The cases cited in support of the text of both of these authors are all cases where the amount of the capital was definitely fixed in the constitution of the company. The case before us is that of an incorporation under a general law which does not impose any limitation whatever upon the capital which incorporators may venture in their business. Neither does it require that the corporators shall in the constating instrument state what their capital is or is to be. No provision is made for any registration or other mode of publishing the amount of the capital of any company organized under this statute. The marked distinction between this and all other such acts to which attention has been called lies in the fact

Digitized by Google

that, under this law, the amount of the capital of any company formed thereunder constitutes no part of the organic law, but is distinctly made a matter for corporate regulation, and relegated to the field covered by that branch of corporate law constituting the by-laws of the company. A by-law may regulate the exercise of a corporate power, but it cannot enlarge or alter the powers conferred by the charter or by statute. A by-law in its nature is subject to amendment, alteration, and repeal. It cannot destroy or impair a right, and must therefore be a reasonable exercise of the internal management of the corporation. Rights may vest in members or others under a by-law which cannot be divested by subsequent alteration. A by-law is a subordinate law. It must not conflict with law, constitutional, statutory, or common, and must not conflict with the constitution of the corporation as found in its charter. Subject to these qualifications, a by-law is distinguishable from the charter of the corporation in the fact that it is subject to alteration. These principles are primary, and need no support.

If a corporation is given power to determine upon its capital stock as a matter of internal regulation, it is difficult to see why one determination is the exhaustion of the power. Any matter which is the proper subject of regulation by by-law may be so regulated from time to time as the corporate interests demand. The right to alter such a regulation when once made may involve vested rights, and for that reason be inadmissible without consent of all affected. But the right to alter or amend a regulation which is the proper subject of corporate legislation through by-law must depend upon questions wholly foreign to those involved by the assumption of powers not expressly granted. Hence it is that the rule invoked against an implied power of increase where the amount of the capital is definitely fixed by the charter or the statutory articles of incorporation has no application where the power to determine upon the capital to be engaged is made one of the matters for internal regulation by by-law.

But it is said that in Tennessee there was a well-settled, definite, public policy, which forbids the granting of an unlimited power of increasing the capital of such artificial creations. This public policy is supposed to be indicated by what is said in reference to old legislative charters, wherein it is said was always found a definite amount of capital. Whether this is so or not may be matter of dispute. But, assuming it to be so, we find by the nineteenth section of this act of 1875 a very marked departure from any former policy in respect to the increase of the capital of such old legislative charters. That section provides "that any corporation heretofore created by an act of the general assembly which may desire to change its name, increase its capital stock, or obtain any powers granted by this act, shall have the right to do so, by the board of directors of said corporation copying such amendment and making an application," etc. Then follows a form of application and a direction that, when the same has been acknowledged and probated and filed with the secretary of state in the manner provided for articles of original incorporation, the desired amendment shall become ipso facto a part of such old charter. The

Digitized by Google

whole matter is set in motion by the directors, and no one may deny or question the granting of the powers thus applied for. By the subsequent act of 1883, being chapter 163 of the Acts of 1883, this same easy mode of increasing capital stock is extended to corporations theretofore created under a general law which gave to chancery courts the power to organize corporations. Now, whether section 19 of the act of 1875 and the act of 1883 be construed as working an increase of capital stock by the mere application of the directors, or as merely conferring a power of increase to be subsequently exercised by the members of the corporation to be affected, we shall not stop to consider. In one event the directors alone would be able to increase the stock of any such company to any extent they saw fit. Upon the other construction the applying corporation, acting alone through its directors, would obtain for their corporation an unlimited right of increasing capital stock, whenever the members chose to exercise it. It is thus very evident that, when this act was passed, there was no definite legislative policy prohibiting the granting of a right to increase the capital of such companies, to be exercised at the will of the corporation concerned. The liberality of the legislature in this respect towards these old legislative irrepealable charters would not lead us to expect any less liberality towards the new brood of corporations anticipated under the legislation then in hand, especially as the same act reserved the right to repeal, alter, or amend the law under which they were to organize. Neither does the power to increase imply or involve the power of decrease. Very different questions of public policy are involved by a power of diminishing capital invested in such companies. The rights of creditors would be affected by a decrease. Their rights are not injuriously involved by an increase. To decrease the capital of such a company would be, in most cases, to withdraw capital pledged to the fortunes of the adventure. These reasons have led the courts with great unanimity to hold that the power of increasing the capital does not involve or imply the power to decrease. Sutherland v. Olcott, 95 N. Y. 94; Moses v. Bank, 1 Lea, 398–408; Salt Co. v. Curzon, L. R. 3 Exch. 35–42; Seignouret v. Insurance Co., 24 Fed. 332; Spell. Priv. Corp. § 770; Smith v. Goldsworthy, 4 Adol. & E. (N. S.) 430; Cook, Stocks & S. § 281; Mor. Priv. Corp. § 434. That an increase in the capital stock goes to the very foundation of the organization, and changes the relation between original subscribers and the corporation, must be admitted. It furnishes a consideration which might move the legislative authority to withhold or regulate the power. But in the last analysis this is a matter which affects members alone. If they become such, subject to such changes, they cannot complain. No question of public policy is involved by this consideration. Under this act, the power of increase is vested in the whole corporation to be exercised by the shareholders. Under such a power, the directors alone cannot authorize an increase. Railway Co. v. Allerton, 18 Wall. 233; Eidman v. Bowman, 58 Ill. 444; Brice, Ultra Vires (3d Eng. Ed.) 280.

These considerations lead us to the conclusion that where, by the constitution of a corporation, it is given power to fix upon the amount of capital stock to be engaged in the business by by-laws, an increase

Digitized by Google

of capital by an amendment of the by-law is valid, and a subscriber bound. The case is like that of a corporation whose capital, by charter provision, is limited by a maximum named therein. In such a case an increase is valid, provided it does not exceed the charter limit. Brice, Ultra Vires (3d Eng. Ed.) 280; Gray v. Bank, 3 Mass. 364; Railroad Co. v. Cushing, 45 Me. 524–532; Cook, Stocks & S. § 281. This question has not been decided by the supreme court of Tennessee. The question was mooted in Cartwright v. Dickinson, 88 Tenn. 476–487, 12 S. W. 1030, but expressly reserved.

The case of Insurance Co. v. Kamper, 73 Ala. 325, has been much relied upon by appellee. It is not in point. The Alabama law required that the constating instrument should state the amount of capital proposed to be employed. This became a definite sum stated in the charter. The fact that the application also stated that the sum named was subject to increase was a nullity. It was an unauthorized power injected into the application. The Tennessee statute contains, as we have already stated, no requirement that the application shall fix the amount of the capital.

This brings us to the Tennessee act of March 27, 1883, being chapter 163 of the Acts of 1883. That act is as follows:

"That any persons organized as a corporation under a charter granted by a chancery court of this state, or under the Acts of 1875, chapter 142, approved March 25, 1875, who may desire to, to change the name of such corporation, increase its capital stock, or obtain any power granted by the act entitled 'An act to provide for the organization of corporations,' approved March 23, 1875, shall have the right to do so under and in the manner provided by section 19 of said act, which provides for the amendment of charters granted by the legislature, and with the like effect as therein provided: provided, that this act shall in no way apply to or affect corporations where suits have already been brought to declare their charters void, and shall have no effect on any kind of litigation or suits now pending against such corporation, for any purpose."

This it is urged is a repeal by implication of the provision in the act of 1875 which we construe as permitting an increase of stock through corporate action of stockholders. This act deals with two distinct classes of corporations,—those organized under the act of Jan. 30, 1871, authorizing chancery courts to organize corporations with the powers conferred by the act, and those organized under the act of 1875. The language of the act is general, but it is manifest that some of the subjects with which it deals relate to but one of the two classes of corporations, while others are common to both. Thus, it is provided that persons organized under either of the two general laws referred to, "who may desire to," may have three distinct privileges. First, they may change the name of the corporation. Second, they may increase the capital stock of the corporation, or obtain the power to increase the capital stock, as these words may be construed. Third, they may obtain the powers granted by the act of 1875. The words of the act in furtherance of the intention must be taken distributively, "redendo singula singulis." They should be applied to the subject-matter to which they relate, as indicated by the context. Suth. St. Const. § 282. "Persons organized as a corporation under" the act of 1875

Digitized by Google

cannot possibly wish to obtain the powers with which they are already vested. This provision must therefore be referred to corporations not organized under the act of 1875. This principle of construction, being clearly applicable to this act, may be properly applied to so much of the act as refers to the subject of an increase of capital stock. If this act be construed as one by which the power to increase capital stock is to be obtained by such an amendment, to be exercised by the members of the corporation, then that power already existed, and these words should be referred to the other class of corporations where the power did not exist. The power to change the corporate name did not exist under either class of articles of association. This part of the act may therefore be regarded as applicable to both classes of corporations.

The act of 1883 contains no repealing clause, and the argument for repeal of the power of increase by by-law, which we find in the fifth section of the act of 1875, has no basis, if the rule of construction we have applied be sound. But if the maxim, "Redendo singula singulis," has no proper application, and all the provisions of the act be held as intended to apply to corporations organized under the act of 1875, then there is no room for an implied repeal of that power, if the act of 1883 be construed as conferring on the directors the power to increase the capital by simply making the application prescribed. Such a power of increase by action of the directors would not be necessarily inconsistent with the power of increasing by action of the shareholders through by-law. The whole subject would not be covered by the new act. Repeals by implication are not favored, and will not be presumed if the two acts can stand together. Repugnancy in principle merely is not enough to work a repeal, unless it is clear that the new legislation is intended to cover the whole field. Suth. St. Const. § 137; Cate v. State, 3 Sneed, 120; Durham v. State, 89 Tenn. 723 et seq., 18 S. W. 74. On the other hand, if the act be construed as a method by which corporations not having the power of increasing capital may obtain the power, then the inclusion of corporations organized under the act of 1875, among those intended as beneficiaries, would not repeal a power already existing, there being no difference in limitation or method between the existing power and that to be obtained by applying for the amendment. So far as that act may be regarded as a legislative opinion that the power of increase did not exist under the act of 1875, such opinion, though entitled to some consideration, would not be of any considerable weight, and is offset by a contrary opinion evidenced by the repeal of the act by the act of April 7, 1893 (Acts Tenn. 1893, p. 299), and the substitution of no other mode of increasing capital. This express repeal would leave no mode by which such companies might lawfully increase their capital stock, unless the power existed under the act of 1875,—a condition of things which we cannot assume the legislature to deliberately intend in view of the legislative history of this subject.

Another objection to a decree against appellee remains to be considered. The eighth section of the revenue act of 1891 provided, among other things, that every corporation increasing its capital

Digitized by Google

should pay a certain privilege tax upon the increase; "and no such corporation, joint-stock company, or association shall have or exercise any corporate powers until the said tax shall have been paid. And the secretary of state shall not file or record any charter, certificate of incorporation, or articles of association, or certify or give any certificate to any corporation, joint-stock company, or association until the foregoing tax has been paid; and no such company, incorporated by any special act of the legislature, shall go into operation, or exercise any corporate powers or privileges, until said tax has been paid." There are several answers to this:

First. It does not appear that this tax has not been paid. The court will not presume that this tax law has been violated, but will, on the contrary, presume that the law has been complied with. Young v. Iron Co., 85 Tenn. 189, 2 S. W. 202.

Second. This defense is not open to appellee. If the corporation had the power to increase its stock, the failure to pay this tax is a mere irregularity, against which the appellee, by his acceptance of the stock and his taking the office of president by virtue alone of his stock, has estopped himself. The case in this aspect falls under the cases of Handley v. Stutz, 139 U. S. 417, 11 Sup. Ct. 530, and Veeder v. Mudgett, 95 N. Y. 295. That this increase was made by a resolution of the stockholders clearly appears. A by-law is nothing more nor less than a resolution of the members of the incorporation. This resolution was unanimously passed. Elliott claimed a credit for $3,012.50, for a patent right assigned to the company in part payment on his stock. This arrangement was made as a means of letting Elliott have the stock at less than par, its capital having been impaired by losses, so that its actual value was less than 75 per cent. of its par value. The difficulty to be met was not that increase stock might not in good faith be sold at less than par, but in the fact that the by-law authorizing the increase required the new stock to be sold at par. Elliott made the transfer of this patent right July 6, 1892, and on January 31, 1893, the directors passed a resolution in the following words:

"Resolved, that, for and in consideration of the sum of $1.00, the right transferred to this company by J. M. Elliott, Jr., for the manufacture of his vertical hook coupler, be, and is hereby, transferred back to him. All rights by this transfer are released and conveyed back to him, the same as though said transfer made on the 6th day of July, 1892, had not been made."

The arrangement by which this patent right was to be taken at the price fixed was for the purpose of evading the condition prescribed by the shareholders, namely, that the increase stock should be sold at par. This seems to have been known to Elliott. The resolution by which he reacquired the patent, at the nominal sum of one dollar, must be construed either as a rescission of the agreement for the purchase of his patent, or as but a part of the original illegal scheme by which the limitation upon the power of the directors to sell the new stock at less than par was to be evaded. In either event, the appellee is not entitled to the credit, it not appearing that the patent was of any value to the corporation while it held the title. The subsequent agreement of the receivers to al-

Digitized by Google

low this credit was a mere proposed compromise settlement, and never carried out, appellee refusing to pay the balance due upon obtaining such credit or to give his notes therefor.

The decree must be reversed and remanded, with direction to enter a decree against appellee for $6,997.32, with interest from the filing of the petition of the receivers. Appellee will pay the costs of this court and costs under the petition in the court below.

(79 Fed. 32.)

STRATTON et al. v. DEWEY et al.

(Circuit Court of Appeals, Fifth Circuit. February 2, 1897.)

No. 523.

1. EQUITY PRACTICE—HEARING EVIDENCE ON DEMURRER.
   It is contrary to correct practice for the court, upon a demurrer to a bill, to consider evidence submitted by consent of the parties; and an order entered upon such a hearing, overruling the demurrer and granting relief, is altogether irregular.
2. APPEAL—FINAL DECREES.
   An order which grants certain relief upon the party's complying with conditions specified in the order, and provides that, if the conditions are not complied with, the relief shall be denied, is not a final decree, and is not appealable.[1]

Appeal from the Circuit Court of the United States for the Eastern District of Texas.

The appellees, Charles P. Dewey and Albert B. Dewey, on September 29, 1894, filed their bill, which they designate as a "bill in the nature of a bill of review," against Jesse D. T. Stratton, Minnie Stratton and her husband (J. Thomas Stratton), and Horace E. Kelley, to review and set aside a final decree pro confesso rendered by the circuit court November 18, 1893, in equity cause No. 235, in which all appellants here except Kelley were complainants and the appellees were defendants. The decree in suit No. 235 adjudged the real estate in controversy to the appellant Minnie Stratton. And, without a reference to a master to state the account between the parties, the sum of $4,000 was further decreed in her favor against the appellees, as the rental value of the land for the years 1890, 1891, 1892, and 1893. A more extended reference to the provisions of the decree is not considered necessary. Errors of law apparent upon the face of the decree in suit No. 235 are principally relied upon by appellees to reverse the decree and reopen the case. And, as an excuse for their failure to seasonably file a bill of review, the bill alleges ignorance on the part of appellees of the rendition of the decree in No. 235, which resulted from the serious and protracted illness of their counsel, who had exclusive charge and control of the litigation in their behalf. Appellants filed a demurrer to the bill December 31, 1894. It appears from the briefs on file that counsel for the respective parties agreed that at the hearing of the cause the court below should consider certain affidavits and other written evidence in connection with the bill and demurrer. The record discloses that the agreement of counsel was respected by the court, and the cause coming on to be heard March 19, 1896, in the manner suggested by the agreement, the following decree was rendered: "This cause came on to be heard at this term, and was argued by counsel; and thereupon, and upon consideration thereof, it was ordered, adjudged, and decreed as follows: That the demurrers of the defendants to complainants' bill are overruled, to which rulings defendants except; and the court having heard the bill and exhibits and affidavits in support thereof, and counter affidavits and exhibits submitted by defendants, it is thereupon order-

[1] As to what are final appealable decrees, see Trust Co. v. Madden, 17 C. C. A. 238.

Digitized by Google

ed, adjudged, and decreed that complainants, Chas. P. Dewey and A. B. Dewey, shall within thirty days from this date pay all costs incurred in equity cause, in this court, No. 235, up to this date, and also all costs that have been incurred in this cause No. 294, and that they shall pay into the registry of this court the sum of four thousand dollars ($4,000), with interest thereon from the 18th day of November, 1893, to the date hereof, at the rate of six per cent. per annum, to be held until the final decree shall be rendered in cause No. 235, to abide such order as may be rendered in said decree; and, upon complainants paying said costs and making said deposit within the time specified, it is ordered, adjudged, and decreed that the pro confesso taken and entered upon the order book of this court on the ——— day of August, 1893 (the same being one of the rule days of this court), and also the final decree of this court pronounced, passed, and entered on the 18th day of November, 1893, in that certain cause then pending in this court upon the equity side of the docket, wherein the said Jesse D. T. Stratton, Minnie Stratton, and her husband, J. Thomas Stratton, defendants herein, were complainants, and said Charles P. Dewey and A. B. Dewey were defendants, and styled upon the equity docket of this court as 'Jesse D. Stratton et al. vs. C. P. Dewey et al.,' and numbered 235 on said equity docket of this court, be and the same are set aside, and said cause reopened, and that said complainants herein, Charles P. Dewey and A. B. Dewey, be now permitted to answer said bill in said cause No. 235,—such answer to be a full answer to the allegations of the bill, and the interrogatories therein to them propounded, and to be filed on or before the first Monday in May, A. D. 1896,—and, upon said payments and deposit being so made within the time herein specified, said cause No. 235 will thereafter proceed according to the rules of practice in equity. It is further ordered, adjudged, and decreed that if said costs are not paid or said deposit not made within thirty days from the date hereof, or if said answers are not filed within the time herein specified, then said decree pro confesso and final decree in said cause No. 235 shall be and remain in full force, and not vacated by this decree, and complainants' bill in this cause will thereupon stand dismissed as on final hearing, and all costs in this cause incurred are in that event adjudged against them, for which execution may issue." From this decree the defendants in the court below appeal and assign error.

Branch T. Masterson, for appellants.
S. W. Jones, for appellees.

Before PARDEE and McCORMICK, Circuit Judges, and MAXEY, District Judge.

MAXEY, District Judge, after stating the facts, delivered the opinion of the court.

The manner in which this cause was heard finds no warrant in the rules of correct chancery practice, and the order made upon the hearing of the demurrer is altogether irregular. This court, however, cannot enter upon a consideration of these questions, nor determine those raised by the assignment of errors, as we are satisfied the motion to dismiss the appeal must be sustained because the order made by the court is not a final decree. It is in the nature of a conditional order, its finality depending upon certain contingencies that might or might not occur. The decree passed in suit No. 235, November 18, 1893, was ordered to be vacated and the cause reopened, and leave granted appellees to file an answer therein, if they should within 30 days deposit $4,000 in the registry of the court, and pay all the costs of this suit and in suit No. 235. But if the costs should not be paid, nor the deposit of $4,000 made, within the 30 days, or if the answer should not be filed within the time allowed, the decree in cause No. 235 was to remain in full force; and (using the concluding language of the decree) "complainants' bill in this cause will thereupon stand

Digitized by Google

dismissed as on final hearing, and all costs in this cause incurred in that event adjudged against them, for which execution may issue." Something more was required to make the decree final than was done in this case. If appellees failed to do what the order required to be done within the prescribed time, appellants should have applied to the court for a final decree dismissing the bill. If the order of court was fully complied with by appellees, a final decree should have been passed, upon their application, reversing the decree in suit No. 235, and reopening that cause for further proceedings. Speaking of an order similar in some of its aspects to the one now before the court, Mr. Justice Miller, as the organ of the court, in Jones' Adm'r v. Craig, 127 U. S. 215, 216, 8 Sup. Ct. 1175, says:

"This order, made upon the hearing of the demurrer to a bill in chancery, is wholly irregular. This court, however, has no jurisdiction of the case as it stands, because the order just cited is not a final decree. Something yet remains to be done in order to make it such, and that action depends upon whether or not the complainants will comply with the order to bring in the sum due on the mortgage. If that order is complied with, then a decree should be made, upon the hypothesis on which the order was made, in favor of the complainants in the bill, and quieting their title. If, however, the money is not brought into court, then, according to the theory of the order, the bill of complaint should be dismissed. But, even assuming the right of the court to make the order, as well as its validity, the circumstances under which the bill of complaint is to be dismissed or the relief granted to the complainants named therein, and the sum to be paid, are matters which are yet to be determined, which may turn out either one way or the other, and which, when ascertained, will be the foundation for a final decree. There is no final decree as the matter now stands."

The appeal is therefore dismissed, and the cause remanded for further proceedings.

(79 Fed. 35.)

SAVANNAH, F. & W. RY. CO. v. JACKSONVILLE, T. & K. W. RY. CO. et al.

(Circuit Court of Appeals, Fifth Circuit. February 23, 1897.)

No. 533.

RAILROAD RECEIVERSHIPS—PREFERRED CLAIMS—RENTALS OF TERMINAL FACILITIES.

A receiver of a railroad having been appointed in a foreclosure suit, with instructions to pay, out of moneys and income in his hands, for supplies and operating expenses, and for expenses of operation during the six months previous to the receivership, another railroad company presented an intervening petition in the suit, setting up a contract with the insolvent railroad company to furnish it with terminal facilities at a stipulated rental, alleging that such facilities had been used up to the appointment of the receiver, and by him after his appointment, and claiming a preference, for the rental due, over the mortgage debt. *Held*, that as the intervener, whether entitled to its whole claim or not, was at least entitled to a fair rental for the time during which its terminal facilities were used by the receiver, it was error to sustain a demurrer to the whole petition.

Appeal from the Circuit Court of the United States for the Southern District of Florida.

On July 23, 1892, the Pennsylvania Company for Insurances on Lives and Granting Annuities filed its bill against the Jacksonville, Tampa & Key West Railway Company for the foreclosure of a mortgage executed to it, as trustee, May 15, 1890, by said railway company. This mortgage is subsequent in point of time to three

Digitized by Google

others executed by the constituents of the Jacksonville, Tampa & Key West Railway Company to the Mercantile Trust Company, to secure bonds aggregating $2,216,000. Agreeably to the prayer of the bill, a receiver was appointed, who went into possession of, and is now operating, the railway. By the order of appointment, the receiver was authorized, out of the moneys and income coming into his hands, to pay all state and municipal taxes chargeable against the property; to pay for such repairs, supplies, labor, and services as should, in his judgment, be necessary or proper to conserve and operate the railway and other property; and to pay the indebtedness of said railway company incurred for expenses of operation during the six months next preceding the date of the order. He was further authorized to pay the maturing interest coupons attached to the bonds issued by the three constituent companies to the Mercantile Trust Company. Subsequently, the appellant, the Savannah, Florida & Western Railway Company, filed its petition of intervention in the original suit, in which it claimed an indebtedness of $45,352.32 against the Jacksonville, Tampa & Key West Railway Company, and, to secure the payment of the same, prayed that an equitable lien be declared in its favor superior to that of the bondholders. The debt of appellant is alleged to have arisen out of a contract entered into between it and the Jacksonville, Tampa & Key West Railway Company, August 1, 1888, by the terms of which appellant agreed to furnish to the Jacksonville, Tampa & Key West Railway Company certain terminal facilities at the city of Jacksonville, as follows: "The necessary track room at its terminal station grounds, in the city of Jacksonville, Florida, for the arrival, departure, standing, and making up of its trains, both passenger and freight, and the necessary facilities for the proper accommodation of its traffic at the said city of Jacksonville, for the period of ninety-nine (99) years, with the privilege of renewal on like terms and conditions." In the contract, the term "first party" refers to the appellant, and "second party" to the appellee, the Jacksonville, Tampa & Key West Railway Company. The third, fourth, and fifth clauses of the contract provide for the payment of the terminal facilities, as follows: "Third. The second party covenants and agrees to pay to the first party, for the use of such of the premises aforesaid as may be exclusively set apart and accepted for its purposes, an annual rental as follows: Six per cent. on the actual cost thereof, and the actual annual expenditure for maintenance and operating expenses, including taxes and insurance. Fourth. The second party covenants and agrees to pay to the first party, as annual rental for the use of such of the premises aforesaid as may be used by it in common with the first party, such part of the interest at six per cent. on the actual cost thereof, and of the actual cost of maintenance and operating expenses, including taxes and insurance, as may be proportionate to its use thereof, which proportion shall be ascertained and determined on the basis of the total number of passengers and tons of freight added together that are carried by each to and from Jacksonville during each year. Fifth. From the date of this agreement, and until the end of the present calendar year, the second party shall pay monthly, on account of the rental of all the premises aforesaid, three hundred and twenty-five ($325) dollars, and at the end of the calendar year, or at some reasonable time thereafter, the relative traffic for the year of each party shall be ascertained and stated by each party to the other for the purpose of arriving at the actual rental due by the second party for the said year; and the amount so established as the total actual rental due for the said year shall be the amount to be paid on account in equal monthly installments during the next calendar year, subject to further payments or deductions when the relative traffic of each party for that year shall have been ascertained and determined; and for each calendar year thereafter the same method of payments on account, subject to revision at the end of each year, shall be followed during the existence of this agreement, but, pending the said annual statement of passengers and tonnage, the second party shall pay monthly on account the same in amount as it has been paying during the previous year." In reference to the performance of the contract by the appellant, the petition alleges: "That, in pursuance of said contract, petitioner did furnish terminal facilities, including depots, warehouses, and wharves, necessary for the purpose of the transaction of its business by the Jacksonville, Tampa and Key West Railway Company, together with room at its station grounds for the arrival, departure, standing, and making up of its trains, and all necessary facilities for the accommodation of its traffic, including the use of switch engines, flagmen, watchmen, crew, and employés necessary for the making up of its trains and doing its switching, police for the protection of its property; and did also furnish a ticket of-

Digitized by Google

fice and ticket agent, and the money to pay for same; and, in addition thereto, did furnish and pay for the maintenance of a ticket office jointly with the petitioner at the St. James Hotel; and did pay the salary of a soliciting agent for both, and the salaries for maintaining a joint ticket office in the city of Jacksonville for the account of petitioner and the Jacksonville, Tampa and Key West Railway Company; and did pay moneys out for the Jacksonville, Tampa and Key West Railway Company for its proportion of cost of telephone at the ticket office in Jacksonville; and did pay for its proportion of electric lights, ice, and for the postage stamps necessary in the operation of said road; and also did pay out sums of money for labor and repairs to said cars of the said Jacksonville, Tampa and Key West Railway Company, and for lubricants; and did, from time to time, furnish labor and material for the said Jacksonville, Tampa and Key West Railway Company; and did pay for the rent of the different ticket offices for account of the Jacksonville, Tampa and Key West Railway Company; and did pay for repairs of piers and wharves for account of said Jacksonville, Tampa and Key West Railway Company, and for all water rents due for water used, and for all other material and labor and offices and repairs necessary and required for the operation of the said Jacksonville, Tampa and Key West Railway Company, and for proper facilities and terminals for said railway company. That for a more particular account of the several items of expenditure and repairs, and amounts before enumerated due to the petitioner, petitioner files herewith an itemized account, marked 'Exhibit B,' and makes said account a part and parcel of its petition; and, for particularity as to the amounts due petitioner, reference is made to said itemized account. Petitioner further states that, as far as the dates when said several amounts became due is concerned, petitioner refers to said itemized statement, marked 'Exhibit B,' hereto attached." Exhibit B consists of a lengthy and complicated itemized statement of account, extremely difficult to properly understand.

To the petition of intervention, demurrers were interposed by both the complainant and defendant in the original suit, and by the receiver. All the parties assign substantially the same grounds of demurrer, which may be stated in the language employed by the original complainant: "First. That it appears by the petitioner's own showing that the alleged debt is an unsecured claim against the defendant railway company, and that petitioner's right to payment is subordinate and inferior to that of the bondholders represented by complainant. And, second, that it appears from petitioner's own showing that the greater part of its alleged indebtedness is a claim which arose against the defendant railway company more than six months prior to the appointment of the receiver in this case, and that the petitioner has no greater equity to receive payment thereof than any other unsecured creditor in like situation would have; and wherefore, and for divers other errors and imperfections, this complainant demands of this court whether it shall be compelled to make any other or further answer to the said petition or any of the matters and things therein contained." At the hearing, the demurrers were sustained, and the petition dismissed, "without prejudice to the right of the Savannah, Florida and Western Railway Company to file a petition for the payment of any money which became due to it from the Jacksonville, Tampa and Key West Railway Company on account of operating expenses, within six months next preceding the appointment of a receiver herein." From the decree thus rendered, the Savannah, Florida & Western Railway Company appeals.

John T. Hartridge, for appellant.

J. C. Cooper and R. W. Liggett, for appellees.

Before PARDEE and McCORMICK, Circuit Judges, and MAXEY, District Judge.

MAXEY, District Judge, after stating the case, delivered the opinion of the court.

The appellant claims an indebtedness of $45,352.32 against the appellee the Jacksonville, Tampa & Key West Railway Company, on account of terminal facilities supplied the latter from August 1, 1888, to July 30, 1892, and insists that its demand is a preferential claim, superior in dignity to that of the bondholders, and hence en-

Digitized by Google

titled in priority of payment. The Jacksonville, Tampa & Key West Railway Company went into the hands of a receiver, July 23, 1892; and the receiver was authorized by the order of the court to pay, out of the earnings and income of the property, for such repairs, supplies, labor, and services as, in his judgment, should be necessary or proper to conserve and operate the railway, and to pay the indebtedness of the railway company incurred for expenses of operation during the six months next preceding the order of appointment. The account attached as an exhibit to the appellant's petition of intervention, if we understand its confused statement, embraces the period beginning August 1, 1888, to the appointment of the receiver, July 23, 1892, and also the interval between the date of such appointment and July 30, 1892. In the operation of the railway during the latter period, the receiver availed himself of the terminal facilities supplied by the appellant. It appears from the petition that the Jacksonville, Tampa & Key West Railway Company had no terminal facilities at Jacksonville. Those furnished were therefore indispensable to the successful operation and management of the railway. They added to the income, and enhanced the value, of the property in the receiver's hands. Indeed, without the facilities supplied by the appellant, the receiver could have operated the railway only at a serious disadvantage. It is therefore only right and proper that he should pay for the use and enjoyment of the property, certainly for the period of its occupancy by him (Thomas v. Car Co., 149 U. S. 95, 13 Sup. Ct. 824; Oil Co. v. Wilson, 142 U. S. 313, 12 Sup. Ct. 235; Carswell v. Trust Co., 20 C. C. A. 282, 74 Fed. 88; Railroad Co. v. Lamont, 16 C. C. A. 364, 69 Fed. 23), not necessarily at the rate fixed by the contract, but the reasonable rental value of its use, to be determined by the proof (Carswell v. Trust Co., supra).

The appellant, then, being entitled to a partial recovery on the case made by the petition of intervention, the court erred in sustaining the demurrers and dismissing the suit. It is a fundamental rule of equity pleading that "if any part of the bill is good, and entitles the complainant either to relief or discovery, a demurrer to the whole bill cannot be sustained." Livingston v. Story, 9 Pet. 658; Pacific R. Co. of Missouri v. Missouri Pac. Ry. Co., 111 U. S. 520, 4 Sup. Ct. 583; Heath v. Railway Co., 8 Blatchf. 407, Fed. Cas. No. 6,306.

As the case must be reheard in the circuit court, it is deemed proper to say that we would not be understood as restricting the appellant's measure of recovery, under the contract, to the period covered by the receivership; nor do we hold that it may recover, for that period, for all the items included in the account. An expression of opinion as to these questions is for the present reserved. As the case is presented, we must decline also to pass upon other difficult and important questions arising upon the assignment of errors. These involve, among others, the application of the landlord's lien laws of Florida, and suggest, rather than directly raise, the more serious question as to the effect of a continuance of the contract, pending the receivership, upon the rights of the holders of the

Digitized by Google

various issues of bonds. No steps appear to have been taken by any of the parties at interest, since the railway was placed in the hands of a receiver, to annul or modify the pre-existing contract of appellant and the Jacksonville, Tampa & Key West Railway Company. Hence the relationship which the receiver bears to that contract (New York, P. & O. R. Co. v. New York, L. E. & W. R. Co., 58 Fed. 268), and the effect of its continuance, present questions which should only be determined upon a record more specific and distinct than the one before us. These questions are merely suggested on this appeal that the appellant may, if deemed advisable, so amend its petition and exhibit as to present in a simple and lucid manner the precise grounds relied upon for a recovery, to the end that the court may act advisedly and with due intelligence in deciding questions of such gravity and importance to the parties interested. Upon this appeal the sole point decided is that the petition of intervention, considered in connection with the annexed statement of account, discloses that the appellant is entitled, at least, to a partial recovery, and that, therefore, the demurrers should not have been sustained and the petition dismissed.

For the error indicated, the decree of the circuit court is reversed, and the cause remanded, with directions to set aside the order sustaining the demurrers and dismissing the petition; the cause thereafter to proceed according to the established rules of equity practice.

(79 Fed. 43.)

GRAND AVENUE HOTEL CO. v. WHARTON et al.

(Circuit Court of Appeals, Eighth Circuit. March 1, 1897.)

SALE—IMPLIED WARRANTY.

Defendant made a contract with plaintiffs to purchase from them two boilers of a certain kind, particularly described in the specifications attached to the contract, such boilers to be set up by plaintiffs in defendant's hotel at Kansas City. After the boilers were set up, it was found that the muddy water of the Missouri river, which was the only source of water supply, caused a sediment to form, which rendered the boilers useless. *Held* that, though the plaintiffs knew that the water of the Missouri would necessarily be used in the boilers, and knew its character, yet, as defendant had contracted for a definite, known kind of boilers, there was no implied warranty on plaintiffs' part that they would operate successfully with the muddy water of the Missouri.

In Error to the Circuit Court of the United States for the Western District of Missouri.

The plaintiff in error, a Missouri corporation, owning and conducting the Midland Hotel at Kansas City, Mo., on August 26, 1891, entered into a written contract with the defendants in error, a Pennsylvania partnership, using the firm name and style of Harrison Safety Boiler Works, whereby the defendants in error agreed to furnish and deliver to plaintiff in error, upon the cars at Philadelphia, in the state of Pennsylvania, two Harrison safety boilers of 150 horse power each, and the services of an erector to set the same, for the sum of $3,600, to be paid therefor at times specified in the contract, all within 90 days from the time of shipment. The contract contained full, particular,

Digitized by Google

and minute specifications of the material and construction of the boilers in all their parts. The boilers were delivered and set up according to the contract, and by reason of some material accepted by the defendant in error to apply upon the price the claim for said boilers was reduced to $3,555. When said boilers were put in use in said hotel, it was found that from the muddy water of the Missouri river, used in them, sediment was deposited, filling, or partially filling, the caps which formed the lower portions of the boilers, and causing incrustations, diminishing the heating capacity of the boilers, and also causing such caps to burst, requiring the fires to be drawn and the replacing of the broken caps with new ones, entailing frequent interruptions in the heating of the hotel. For the purpose of cleansing such water from the mud before use in said boilers, the plaintiff in error, in December, 1891, purchased of defendants in error one Cochrane feed-water heater for $325, on which the defendants in error paid freight to the amount of $13.02, which is the basis of the second cause of action. The third cause of action is for new caps and other material furnished on orders of plaintiff in error for use in repairs of the boilers rendered necessary from the causes aforesaid. The defendants in error were the manufacturers of these boilers. And plaintiff in error, by its answer, alleged that when said written contract of August 26, 1891, was entered into, the defendants in error well knew that the boilers were for use in said Midland Hotel in Kansas City, and also the uses there required of them; that the only supply of water was the Missouri river; and that from these circumstances they impliedly undertook and warranted that such boilers were adapted to the use of said hotel, and to the use of water from the Missouri river; and alleged that by reason of constant incrustations and breakings as above indicated they wholly failed to subserve such uses, entailed on plaintiff in error large expenses and damages, sought to be recovered as a counterclaim, and were worthless, and as such had been removed from the hotel, after defendants in error had made ineffectual attempts to put them in suitable working order. Upon the trial, the plaintiff in error offered to show that before the making of said written contract the agent of defendant in error came to Kansas City to make the contract with plaintiff in error for boilers embodying the Harrison principle, adapted to the use of said hotel and to the use of Missouri river water, knowing that this was the supply of water on which the plaintiff in error must depend in using such boilers, and that this was made known to him by the plaintiff in error before the making of such contract. Also that the boilers furnished were wholly unfit and unsuitable for the use of Missouri river water. Upon the objection that the testimony so offered was immaterial and irrelevant, and had no tendency to prove an implied warranty, the court excluded such offers of testimony, to which rulings the plaintiff in error duly excepted. Under the direction of the court the verdict of the jury was in favor of the plaintiffs below for substantially the amount claimed in the first three causes of action, the other having been abandoned.

Gardiner Lathrop (Thos. R. Morrow, John M. Fox, and Samuel W. Moore with him on brief), for plaintiff in error.

Sanford B. Ladd (John C. Gage and Charles F. Small with him on brief), for defendants in error.

Before SANBORN and THAYER, Circuit Judges, and LOCHREN, District Judge.

LOCHREN District Judge, after stating the case as above, delivered the opinion of the court.

1. Where a manufacturer contracts to supply an article which he manufactures to be applied to a particular use of which he is advised, so that the buyer necessarily trusts to the judgment and skill of the manufacturer, there is an implied warranty that the article shall be reasonably fit for the use to which it is to be applied. Bridge Co. v. Hamilton, 110 U. S. 108, 3 Sup. Ct. 537; Leopold v. Van Kirk, 27 Wis. 152; Jones v. Just, L. R. 3 Q. B. 197;

Digitized by Google

Brown v. Edgington, 2 Man. & G. 279; Lime Co. v. Fay (Neb.) 55 N. W. 213; Pease v. Sabin, 38 Vt. 432; Iron Co. v. Groves, 68 Pa. St. 149.

2. But when a known, described, and definite article is ordered of a manufacturer, although it be stated by the purchaser to be required for a particular use, yet if the known, described, and definite thing be actually supplied, there is no implied warranty that it shall answer the particular purpose intended by the buyer. Seitz v. Machine Co., 141 U. S. 510, 12 Sup. Ct. 46; Jones v. Just, L. R. 3 Q. B. 197; Cosgrove v. Bennett, 32 Minn. 371, 20 N. W. 359; Chanter v. Hopkins, 4 Mees. & W. 399; Boiler Co. v. Duncan, 87 Wis. 120, 58 N. W. 232. In the case last cited it was said by the court:

"It was made plain that the defendant got the exact article or thing he bargained for; and, although it may have been stated that it was required for a particular purpose, still, as he did not exact an express warranty, he took the risk of its fitness for the intended use, and no warranty in that respect can be implied."

3. The language of the court in the Wisconsin case just quoted applies exactly to the present case. Here the purchaser contracted for a definite, well-known kind of boiler, its president having then a boiler of the same kind in use. The specifications as to the size, form, material, and every detail were minute, and embodied in the contract. The manufacturers were obligated to deliver exactly such boilers as were described and contracted for, and could not, under the contract, deliver anything different. There is no claim that the boilers did not in every respect conform to this contract and specifications, nor any claim that they were defective, either in respect to workmanship or material. The purchaser did not exact a warranty that the boilers would operate with the muddy waters of the Missouri river, and therefore assumed that risk itself. The writing must, on familiar principles, be held to embody the entire contract obligations of the parties, and all negotiations and colloquies of the parties preceding the execution of the writing were immaterial. The surrounding circumstances might be considered in applying the terms of the contract, or in the interpretation of doubtful terms, but not for the purpose of adding terms not contained in the writing. There was nothing doubtful or uncertain in the terms of this written contract. There were no errors in the rulings of the court, and the judgment is affirmed.

Digitized by Google

(79 Fed. 51.)

FIRST NAT. BANK OF CONCORD v. HAWKINS.

(Circuit Court of Appeals, First Circuit. March 5, 1897.)

No. 202.

1. NATIONAL BANKS—INSOLVENCY AND ASSESSMENT—ULTRA VIRES—ESTOPPEL.
   A national bank which has purchased from a third party shares of stock in another national bank as an investment, and which appears on the books of the latter bank as a stockholder, is estopped, after the latter's failure, to deny liability to an assessment on the stock on the ground that its purchase thereof was ultra vires.
2. SAME—ASSESSMENT—NATURE OF LIABILITY.
   The liability of a shareholder in a national bank to an assessment on his shares is not a contractual liability flowing from his acquisition of the shares, but a liability which arises by force of the statute authorizing the assessment.[1]

In Error to the Circuit Court of the United States for the District of New Hampshire.

This was an action by Edward Hawkins, as receiver of the Indianapolis National Bank, against the First National Bank of Concord, to recover an assessment made by the comptroller of the currency upon certain shares of stock in the former bank, which were held by the latter as owner. In the circuit court a jury was waived by stipulation in writing, and the case was tried to the court, which made a finding of facts, and rendered judgment for the plaintiff. The defendant has sued out this writ of error.

The finding of facts was in the following language:

"The plaintiff is receiver of the Indianapolis National Bank of Indianapolis, which bank was duly organized and authorized to do business as a national banking association. The bank was declared insolvent and ceased to do business on the 24th day of July, 1893. The plaintiff was duly appointed and qualified receiver of the bank on the 3d day of August, 1893, and took possession of the assets of the bank on the 8th day of the same month. The capital stock of the bank was 3,000 shares, of the par value of $100 each. On the 25th day of October, 1893, an assessment was ordered by the comptroller of $100 per share on the capital stock of the bank, to enforce the individual liability of shareholders, and an order made to pay such assessment on or before the 25th day of November, 1893, and the defendant was duly notified thereof. The defendant, being a national banking association, duly organized and authorized to do business at Concord, N. H., on the 21st day of May, 1889, with a portion of its surplus funds, purchased of a third party, authorized to hold and make sale, 100 shares of the stock of the Indianapolis National Bank, as an investment, and has ever since held the same as an investment. The defendant bank has appeared upon the books of the Indianapolis National Bank as a shareholder of 100 shares of its stock from the time of such purchase to the present time. During such holding the defendant bank received annual dividends declared by the Indianapolis bank prior to July, 1893. The defendant has not paid said assessment or any part thereof. The parties of record, through their counsel of record, having appeared before me in this, a jury-waived case, and having adduced their evidence, I find the facts above stated."

Reuben E. Walker and Frank S. Streeter, for plaintiff in error.

J. S. H. Frink, for defendant in error.

Before COLT and PUTNAM, Circuit Judges, and WEBB, District Judge.

[1] As to who are liable to assessment as shareholders in national banks, see note to Beal v. Bank, 15 C. C. A. 130.

Digitized by Google

PUTNAM, Circuit Judge. This case is based by the plaintiff in error on the proposition that it had no power under the law of its creation to acquire the stock of another national bank as an investment. It is not necessary for us to consider this proposition. It is settled that it had full power to loan on the stock as collateral, or to take it in settlement of a doubtful debt, and in either case, as incidental thereto, to cause the stock to be transferred into its own name absolutely, if it deemed it for its interest so to do. First Nat. Bank of Charlotte v. National Exch. Bank of Baltimore, 92 U. S. 122; Bank v. Case, 99 U. S. 628. Therefore, on the face of the transaction, no illegality appeared, and nothing to advise either the bank whose stock it acquired, or the existing or future creditors of that bank, or the comptroller of the currency, who was their quasi public representative, that the transaction was not within the scope of the unquestionable powers of the plaintiff in error. Under these circumstances, the entire trend of the law is that the plaintiff in error is estopped to deny its liability in this case. Chubb v. Upton, 95 U. S. 665; Pullman v. Upton, 96 U. S. 328, 330; Bank v. Case, 99 U. S. 628; Scovill v. Thayer, 105 U. S. 143, 149; Anderson v. Warehouse Co., 111 U. S. 479, 483, 4 Sup. Ct. 525. There might arise some exceptional instances where, for special reasons, this estoppel would not apply; as where stock had been issued in excess of the authorized limit (Scovill v. Thayer, ubi supra), or where, in the cases represented by section 5152 of the Revised Statutes, there are no interests capable of binding themselves either by contract or estoppel, or where the substance of the transaction appears on its face, as in Beal v. Bank, decided by us and reported in 15 C. C. A. 128, and 67 Fed. 816, although the latter class is not strictly exceptional. But none of those special elements are found here. We have no need to reconcile Burgess v. Seligman, 107 U. S. 20, 2 Sup. Ct. 10, which arose on a statute of Missouri, as the decisions referred to by us apply directly to national banks, and come down to a later date.

The plaintiff in error maintains that the liability sought to be enforced here is merely contractual, flowing out of the acquisition of the stock in question and continuous upon it; so that, therefore, if the original investment was unauthorized, the liability, being still in fieri, cannot be enforced. But this does not correctly state the nature of the liability. There can be no substantial doubt that, whether the purchase of the stock was authorized or not, the plaintiff in error was, after its transfer, by the force of the transaction, its owner, and that no one else could stand as such. Under these circumstances, the liability sought to be enforced here arises by force of the statute, and is not contractual. Keyser v. Hitz, 133 U. S. 138, 151, 10 Sup. Ct. 290. Indeed, the expressions of the supreme court found in Bank v. Case, ubi supra, are so much in harmony with the rules deducible from the practical conclusions of that court, in the cases to which we have referred, that we accept them as disposing of this suit. The court said, at page 633:

"There is nothing in the argument on behalf of the appellant that the bank was not authorized to make a loan with the stock of another bank pledged as collateral se-

Digitized by Google

curity. That is an ordinary mode of loaning, and there is nothing in the letter or spirit of the national banking act that prohibits it. But, if there were, the lender could not set up its own violation of law to escape the responsibility resulting from its illegal action."

The judgment of the circuit court is affirmed, with interest, and with the costs of this court to the defendant in error.

(79 Fed. 53.)

BOWEN v. CLYMER et al.

(Circuit Court of Appeals, Fifth Circuit. February 2, 1897.)

No. 543.

LIMITATION OF ACTIONS—POSSESSION OF LANDS BY HEIR—LITIGATION WITH ADMINISTRATOR.

Possession of land, held by one who claims it only as heir of a deceased owner, and who, during the whole of such possession, is litigating with the administrator of such deceased owner the validity of the administration, will not ripen into a title under statutes of limitation, good as against a purchaser from the administrator under an order of sale for payment of debts, made after the administrator's right is established; nor can the possession of one to whom the heir has conveyed pending the litigation, and who has knowledge of it, and of the nature of the heir's title, give any better right.

In Error to the Circuit Court of the United States for the Northern District of Texas.

De Edward Greer, for plaintiff in error.

Before PARDEE and McCORMICK, Circuit Judges, and MAXEY, District Judge.

McCORMICK, Circuit Judge. R. D. Bowen, the plaintiff, brought this action against J. M. Clymer, W. J. Dorsett, G. W. Wharton, and N. P. Wharton, to try the title and recover the possession of land described in the pleadings. The petition is in the statutory form. The defendants pleaded the general issue, and pleaded specially the three, five, and ten years' statutes of limitation. On the trial the judge instructed the jury to find a verdict in favor of the defendants, which action of the court is assigned as error.

The proof established or tended to show the following facts: That one Earle Cravens departed this life, intestate, April 10, 1880, in Dallas county, Tex.; that at the time of her death she was the owner of the land in controversy; that one Mary P. Fortson was the sister and sole surviving heir of the deceased; that plaintiff and defendants claim through Earle Cravens as a common source of title; that one George F. Alford was appointed administrator of the estate of Earle Cravens on September 20, 1880, by the county court of Dallas county, Tex., and that he duly qualified and entered upon the duties of such administrator; that, at the time of this grant of administration, there were existing claims against the estate to the amount of more than $1,000; that on February 28, 1882, Mary Fortson, as sole heir, joined by her husband, filed her suit in the county court of Dallas

Digitized by Google

county, Tex., in the administration of the estate of Earle Cravens, in which she attacked the grant of administration, on the ground that the court had no jurisdiction to grant the same, and asking that the same be dismissed, and the appointment of the administrator set aside, and that the grant of administration and all proceedings under it be declared null and void. On May 22, 1882, the county court granted judgment as prayed for by the heir, and decreed that the administration was null and void. On appeal to the district court, that court, on December 12, 1883, reversed the judgment of the county court, dismissed the suit of Mrs. Fortson, and established the validity of the administration. From this judgment, Mrs. Fortson appealed to the supreme court, which, on December 5, 1884, reversed the judgment of the district court, and remanded the cause thereto for further proceedings therein. On April 6, 1886, the district court adjudged and decreed that the administration was null and void, and that said Alford be removed as administrator, and his appointment be revoked, set aside, and held for naught. From this judgment the administrator appealed to the supreme court, and that court, on June 18, 1889, rendered its judgment, reversing the judgment of the district court, and adjudged and decreed that the suit against the administrator be dismissed, and that their judgment be certified to the district court for observance. On February 15, 1890, the district court, having received the mandate of the supreme court, rendered judgment thereon that the heir take nothing by her suit, and that the defendant Alford, the administrator, go hence without day, and the administration on the estate of Earle Cravens, deceased, be sustained, and that this judgment be certified to the county court of Dallas county, sitting in probate, with instructions to proceed in the matter of said administration. The proof tended to show that on January 24, 1892, the established and existing indebtedness against the estate of Earle Cravens amounted to $3,660.83; that on February 27, 1893, the county court of Dallas county ordered a sale of the land in controversy for the payment of the indebtedness against the estate, under which order the land was sold by the administrator, and bought by R. D. Bowen, plaintiff, the sale reported to the court, and duly approved and confirmed, and the administrator was ordered to make a deed therefor to plaintiff, which deed was made as ordered, bearing date November 13, 1893, and was duly recorded in the county where the land is situated. On January 18, 1884, Mary P. Fortson, as sole heir of Earle Cravens, sold and conveyed the land in controversy to C. H. Cooper. The next day he conveyed the land to J. M. Clymer, one of the defendants, under whom the other defendants claim through proper deeds. Clymer testified that he had all of his negotiations for the purchase of the land with George F. Alford; that they had considerable negotiation about the purchase of it; and that the price and terms were agreed on between him and Alford, and when the deeds of Mrs. Fortson to Cooper, and from Cooper to Clymer, were handed to him by Alford, Clymer objected, stating to Alford that he had bought the land from him, and wanted a deed from him. Whereupon Alford said that Cooper was his partner, and that a deed from Cooper was the same as a deed from Alford;

Digitized by Google

and, under these circumstances, relying on these statements, he accepted the deed, supposing that he was getting a good title to the land. He paid the purchase money to Alford. He had possession of the land before he bought it, but did not claim it until then, after which he continued in possession, claiming it as his own. There was proof as to the continued possession of the premises, and the payment of taxes on the land, but the view we have taken of the case makes any further reference thereto unnecessary.

There is no appearance for defendants in error in this court. We have not the benefit of either oral argument or brief on their behalf. There is no suggestion in the record of the ground on which the trial judge based his charge directing a verdict for the defendants. The counsel for plaintiff in error suggest that the only ground on which the charge of the court can be held to be correct is that the defendants had acquired title by the statute of limitations. It is certainly too late for the heir or those claiming under her to contest the validity of the administration. Waiving any question as to the proper forum for such matter, there is no suggestion in the record of any collusion between the purchaser at the administrator's sale and Alford, or any ground to charge the purchaser with the equities, if any, growing out of the dealings of Alford and Cooper with Clymer, in 1884. The indebtedness of the deceased was a charge upon her estate as clearly as the lien of an attachment upon her property in her lifetime would have raised. The estate vested in the heir, subject to administration. The heir herself did not claim against the estate, but through it. It is not suggested that the purchaser from her did not know her relations to the estate, but, on the contrary, it is shown that she sold and conveyed in her character as sole heir. We therefore concur with the suggestion of counsel for the plaintiff in error that the only ground upon which the charge of the court can be held to be correct is that the defendants acquired title by the statute of limitation. Plaintiff in error contends that these purchasers from the heir, pending the litigation between the heir and the administrator, over the grant of the administration itself, are chargeable as lis pendens purchasers. On this point there is a dearth of direct authorities. It is not a question of whether limitation will run against the estate in the course of administration,—for, subject to certain qualifications, not necessary to be mentioned, it is too well settled that the right of an estate may be lost by limitation,—but the question is: Can the heir, while holding only as such, keep possession of the property, and during the whole time litigate with the administrator over the validity of the administration, until, by the lapse of three or five years' time, her possession shall ripen into a title by prescription; and, if she cannot do this by holding possession herself, can she effect it by a sale to another, who has knowledge of her relation to the estate, and his subsequent possession, pending her litigation with the administrator, of three or five years? It seems clear to us that these questions must be answered in the negative, and that a purchaser from her is so charged with notice of the pending litigation, and notice of its character, as to debar him from claiming that his possession is peaceable, if adverse. As said above, direct au-

Digitized by Google

thorities have not been presented by plaintiff's counsel or found by us. The cases of Harle v. Langdon's Heirs, 60 Tex. 555, and Paxton v. Meyer, 67 Tex. 96, 2 S. W. 817, present closer analogies than any we have examined; but our conclusion is based rather upon elementary principles, deduced, it is true, from adjudged cases, but too well settled to require citation.

It follows that the judgment of the circuit court must be reversed, and the cause is remanded to that court, with instructions to award the plaintiff a new trial.

(79 Fed. 75.)

UNITED STATES v. DUDLEY.

(Circuit Court of Appeals, Second Circuit. February 23, 1897.)

CUSTOMS DUTIES—CLASSIFICATION—DRESSED LUMBER.

Boards and planks of uniform length, width, and thickness, planed and matched for splines, are not dutiable as "manufactures of wood," under paragraph 181, Act 1894, but are entitled to free entry as "dressed lumber," under paragraph 676. 74 Fed. 548, affirmed.

Appeal from the Circuit Court of the United States for the District of Vermont.

This is an appeal from a decision of the circuit court, district of Vermont, reversing a decision of the board of general appraisers which affirmed a decision of the collector of customs classifying certain importations for duty under the tariff act of August 28, 1894. The articles imported were boards and planks, each piece of a specified length, width, and thickness, planed on one side, and matched or grooved for splines. The collector classified some of the importations under paragraph 181, as "manufactures of wood not specially provided for," and others under section 3, as "articles manufactured in whole or in part, not provided for in this act." The importers claimed that their importations were free from duty, under paragraph 676, as "lumber, dressed."

John H. Senter and Edward B. Whitney, for appellant.

J. P. Tucker and C. A. Prouty, for appellee.

Before LACOMBE and SHIPMAN, Circuit Judges.

PER CURIAM. Inasmuch as the judges who heard this appeal are divided in opinion, the decision of the circuit court is affirmed.

(79 Fed. 84.)

MacLEOD et al. v. GRAVEN.

(Circuit Court of Appeals, Sixth Circuit. March 2, 1897.)

No. 354.

APPEAL—JURISDICTION OF SUPREME COURT.

A writ of error from the supreme court does not lie, by virtue of the last paragraph of section 6 of the circuit court of appeals act, to review a judgment of the circuit court of appeals which is not a final judgment.

In Error to the Circuit Court of the United States for the District of Kentucky.

Digitized by Google

Before TAFT and LURTON, Circuit Judges, and SEVERENS, District Judge.

TAFT, Circuit Judge. In this case a writ of error was sued out to a judgment in favor of Mrs. Graven, administratrix, against MacLeod, receiver, rendered by the circuit court below for damages for the wrongful death of plaintiff's intestate. On April 14, 1896, this court reversed the judgment of the circuit court, and remanded the case, with instructions to award a new trial. MacLeod v. Graven, 19 C. C. A. 616, 73 Fed. 627. An application was made to Judge LURTON, as a member of this court, to allow a writ of error to the judgment of this court so as to permit a review thereof by the supreme court of the United States. The application has been referred by Judge LURTON for the consideration of the whole court. The right to such a writ of error is asserted upon the ground that MacLeod, the defendant in the court below, was a receiver appointed by that court; that the injury complained of was caused by the operation of an electric railroad by him as such receiver; that the suit against him was therefore one arising under the laws of the United States (Railway Co. v. Cox, 145 U. S. 593, 12 Sup. Ct. 905); that on appeals or writs of error in such suits the judgments of this court are not final; and that, as this case involves more than $1,000, by the express terms of the last paragraph of section 6 of the circuit court of appeals act a review of the case by writ of error from the supreme court is provided.

The application presents the question whether, conceding that a writ of error from the supreme court will lie in this class of cases, it can lie in any case where the judgment of this court is not a final judgment. It is well settled that a judgment of an appellate court reversing the judgment of the trial court, and remanding the cause for further proceedings, is not a "final judgment," as that term is used in federal appellate procedure. Insurance Co. v. Kirchoff, 160 U. S. 374, 16 Sup. Ct. 318; Werner v. Charleston, 151 U. S. 360, 14 Sup. Ct. 356; Brown v. Baxter, 146 U. S. 619, 13 Sup. Ct. 260; Meagher v. Manufacturing Co., 145 U. S. 608, 12 Sup. Ct. 876; Rice v. Sanger, 144 U. S. 197, 12 Sup. Ct. 664; Johnson v. Keith, 117 U. S. 199, 6 Sup. Ct. 669; Bostwick v. Brinkerhoff, 106 U. S. 3, 1 Sup. Ct. 15; Houston v. Moore, 3 Wheat, 433.

Section 6 of the court of appeals act (26 Stat. 826) provides that "the circuit courts of appeals established by this act shall exercise appellate jurisdiction to review by appeal or by writ of error final decision in the district court and the existing circuit courts in all cases other than those provided for" in the fifth section. The section then provides that in certain cases the judgment of the courts of appeal shall be final. The section further provides that in "all cases not hereinbefore in this section made final there shall be of right an appeal or writ of error or review of the case by the supreme court of the United States where the matter in controversy shall exceed $1,000 besides costs." The contention is that this language does not require that the judgment of the court of appeals to be reviewed in the supreme court shall be final, as expressly required in section 709,

Digitized by Google

Rev. St., which confers jurisdiction on the supreme court to review judgments of state courts, and under which the cases above cited arose and were decided. The contention cannot be sustained. In McLish v. Roff, 141 U. S. 661, 12 Sup. Ct. 118, it was held that under section 5 of the court of appeals act, which provides that appeals or writs of error may be taken from the district courts or from the existing circuit courts direct to the supreme court in any case in which the jurisdiction of the court is in issue, and that in such cases the question of jurisdiction shall be certified for decision, the supreme court had no jurisdiction to review the question until the case had proceeded to final judgment. Said Mr. Justice Lamar, speaking for the supreme court:

"It is manifest that the words in section 5, 'appeals or writs of error,' must be understood within the meaning of those terms as used in all prior acts of congress relating to the appellate powers of this court and in the long-standing rules of practice and procedure in the federal courts. Taken in that sense, those terms mean the proceedings by which a cause in which there has been a final judgment is removed from a court below to an appellate court for review, reversal, or affirmance."

If such is the construction to be put on these words when used in the fifth section, certainly the same words, when used in the sixth section in pari materia, are to receive the same interpretation. The application for the writ of error must be denied.

(79 Fed. 85.)

BRUNSWICK-BALKE-COLLENDER CO. v. PHELAN BILLIARD-BALL CO.

(Circuit Court of Appeals, Second Circuit. February 23, 1897.)

PATENTS—INVENTION—NOVELTY.

The Collender patent, No. 228,879, for a pool-ball frame with rounded interior and exterior corners, and made of layers of wood bent into triangular shape, and glued or fastened together, the layers preferably breaking joints, is void, as being the result of mere mechanical skill. 76 Fed. 978, affirmed.

Appeal from the Circuit Court of the United States for the Southern District of New York.

This was a suit in equity by the Brunswick-Balke-Collender Company against the Phelan Billiard-Ball Company for alleged infringement of a patent for an improvement in pool-ball frames. The circuit court held that the patent was void for want of invention, and dismissed the bill. 76 Fed. 978. The complainant has appealed.

M. B. Phillips, for appellant.

Henry A. Forster, for appellee.

Before WALLACE, LACOMBE, and SHIPMAN, Circuit Judges.

SHIPMAN, Circuit Judge. The bill in equity of the complainant charged an infringement by the defendant of letters patent No. 228,879, issued on June 15, 1880, to Hugh W. Collender, as assignee of Stephen De Gaetano, for an improvement in pool-ball frames. The

Digitized by Google

circuit court for the Southern district of New York dismissed the bill. 76 Fed. 978. The following extracts from the specification describe the invention with sufficient fullness:

"Previous to my invention, it has been customary to make the triangular ball-holders, used in placing the balls for the game of 'fifteen ball pool' (and other games played with fifteen balls) on billiard tables, of three straight strips or pieces of wood, joined at their adjacent ends to form the angles of the frame, and to strengthen the frame at these angles by interiorly-placed corner-blocks, glued or otherwise fastened in, and sometimes to further strengthen the angles or corners by metallic angle-plates applied exteriorly to the frame. My invention has for its object to produce a 'triangle' or ball-frame which can be made much lighter, and also much stronger and more durable, than those heretofore manufactured, while at the same time its manufacture can be accomplished at much less cost than that of the construction or kind of frames heretofore made, and in its use it will be free of all the objections found in the use of the old-fashioned ball-frame. To these ends and objects, my invention consists in a triangle or ball-frame composed of several layers or thin strips of wood bent round into the requisite shape, and glued (or otherwise fastened) together. My new frame is composed of several or numerous strips or thin layers of wood, or of several strips of veneer, which are placed in close contact and perfectly united throughout their lengths, by preference in such an arrangement that no two of the end jointures of the strips occur at the same locality. My improved ball-frame, instead of having angles, has three rounded corners, so to speak, the circular curvature of each of which (at the inner surface of the frame) should correspond substantially with the curvature of the pool-ball."

The claims of the patent are as follows:

"(1) A ball-frame or triangle composed of wood or other suitable material, and formed with three interior and exterior curved or rounded corners, substantially as and for the purposes set forth. (2) A ball-frame having curved or rounded corners, and made of a series of layers of wood bent into triangular shape, and having their adjacent surfaces glued or otherwise fastened together, as and for the purposes set forth."

The gist of the improvement was a frame which, abandoning angles or sharp corners, should be a continuous, hoop-like structure, instead of a frame of three separate pieces joined at the three corners. Whether the inventor had in his mind, or in his specification, the idea of a frame composed of a single piece of wood, is denied by the defendant and is affirmed by the complainant. We assume that such a construction was sufficiently disclosed in the specification, and was described in the first claim. It is admitted that before the date of the alleged invention there were pool-ball frames which had their corner pieces made with interior curved surfaces, so as to conform substantially to the curvature of the balls. This fact destroys any patentable novelty in making a pool-ball frame with interior and exterior curved or rounded corners, and restricts the patentable character of the invention of the first claim to a frame made of a continuous strip or band of wood, or other suitable material, instead of a frame made of three strips joined together at the corners. Nothing of an inventive character can exist in the change from a triangular shaped frame made of three separate pieces of wood into the same general style of frame made of one bent piece of wood. The second claim is for a frame of curved or rounded corners, and made of a series of layers or veneers of wood, glued or fastened together, and bent into triangular shape. Preferentially, the ends can be joined together at different places on the frame, so as to break joints and secure greater strength. The novelty, in addition to the rounded

Digitized by Google

corners, consists in the method of construction, whereby additional strength is imparted to the frame. It would hardly be claimed that the described mode of construction, by layers of wood joined together, is a new method of making any wooden article or structure, but it undoubtedly was a new method of making this article; and it made the frame stronger, and less liable to crack or to be strained at the corners. In like manner, the iron curve of the wagon reach in Hicks v. Kelsey, 18 Wall. 670, made a better, more durable, and more solid wagon reach than the pre-existing reach, which had a wooden curve, with or without strengthening straps of iron. But these advantages, the court thought, resulted from superiority of construction, and were the product of mechanical judgment in regard to the use of materials. The improvement in this case is of the same mere mechanical character. The decree of the circuit court is affirmed, with costs.

(79 Fed. 95.)

DAVIDSON et al. v. BALDWIN.

(Circuit Court of Appeals, Sixth Circuit. March 2, 1897.)

No. 433.

1. SHIPPING — MORTGAGEE HOLDING LEGAL TITLE — PERSONAL LIABILITY FOR REPAIRS.

   One who purchases a vessel at marshal's sale, takes the legal title, and is registered as owner at the customhouse, but who, in fact, purchases for another, and holds the title merely as collateral security for a debt, is a mere mortgagee; and if he is not in possession, and does not appoint the master, he is not personally liable for repairs or supplies furnished on the order of the master. And when it is sought to hold him liable he is not estopped from showing his true relation to the vessel.

2. SAME—APPOINTMENT AND AUTHORITY OF MASTER—ENROLLMENT.

   When one is acting as master by appointment of the real owner, his status and authority as such are not affected by the fact that his name has not been inserted as master in the enrollment, for the registry and enrollment are only for the protection of the revenue.

3. SAME—ESTOPPEL.

   B. was the registered owner of a vessel, but in fact held the legal title as security for a debt. R. & Sons were the real owners, and R. was enrolled as master, and had full possession and control. Without changing this enrollment, he appointed one M. as master, himself doing the business of the vessel, as managing partner of R. & Sons. As such, he ordered repairs of libelants, they understanding that he did so simply as "manager." *Held*, that on these facts, in the absence of any other evidence of a holding out by B. of R., as his manager, B. was not estopped from denying that R. was his agent.

Appeal from the Circuit Court of the United States for the Eastern District of Michigan.

The record includes three libels in personam, filed by persons doing repairs or furnishing material to the tug Sea Gull, for which it is sought to make the appellee, Stephen Baldwin, liable as owner. These libelants were James Davidson, the Bay City Iron Company, and Charles and William F. Jennison. The record also includes a libel filed by James Murdock, who seeks to recover his wages as master of the Sea Gull. All of these libels were by agreement con-

Digitized by Google

solidated and heard together. The facts necessary to be stated, as we find them to be, are these: The tug Sea Gull was originally owned by the Reid Towing & Wrecking Company, a corporation of the state of Michigan, of which one-half the capital was owned by James Reid, who was the president and manager of the corporation. Under proceeding against the tug in the district court, the Sea Gull was sold at marshal's sale to satisfy sundry decrees of that court. At the sale she was bought by the appellee, Stephen Baldwin, at the price of $14,000, and a bill of sale executed to him. This purchase was made by Baldwin for James Reid, under an agreement by which he was to advance to Reid $12,500 of the purchase money, and take and hold the legal title until Reid's note for that sum should be paid, and another note for $1,000, due Baldwin upon another transaction. Baldwin paid $12,500 of the price bid at marshal's sale, the remainder of the purchase money being paid by Reid or by another for him. Reid gave to Baldwin the note of James Reid & Sons, a firm composed of himself and two sons, formed for the purpose of carrying on the business originally carried on by the Reid Towing & Wrecking Company, for the sum thus loaned, which the latter indorsed to a bank as a means of raising money thereon. Baldwin gave to Reid an obligation to convey the vessel to him upon payment of that note, and another for $1,000, made by James Reid alone. That paper was in these words:

"I hereby agree to transfer the tug Sea Gull, all her equipage, all booms, boom chains, pumps, and anything else that I may now have or hereafter come into my possession, upon the payment of two notes held by me. Twelve thousand five hundred dollars is now held by the Preston National Bank, and indorsed by me. This note to be paid by James Reid & Sons, or by James Reid. One of twelve thousand five hundred ($12,500) dollars, made by James Reid & Sons, and one for one thousand ($1,000), made by James Reid. Also the interest on said notes, and any other obligation that may be incurred by James Reid that I may become responsible for. Also sufficient to pay me for any trouble that I may be to.

"[Signed] S. Baldwin. [L. S.]"

The tug was enrolled and registered in the name of Stephen Baldwin as owner, "whereof James Reid was at present master." This enrollment was at Detroit, the place of the residence of said Baldwin. The tug, from the time she was turned over by the marshal, remained in the sole possession of James Reid or James Reid & Sons, and was by them used in connection with two other tugs, owned in whole or part by Reid, in a wrecking and towing business carried on by the firm of James Reid & Sons. The bill of sale to Baldwin and the registry bear date in May, 1891. During most of the season of 1891, Reid himself sailed the Sea Gull; but late in 1891 he hired the appellant James Murdock to sail her, and from then until her destruction by fire, in 1893, Murdock was the acting master, and it is for his wages as master that he has filed his libel. From some time in 1891 (time not ascertainable) Reid was the managing partner of James Reid & Sons, a firm whose place of business was at Bay City, Mich. The business he conducted as "James Reid & Sons," and under this title he managed each of the tugs owned or controlled by James Reid & Sons, and under that style kept his bank account, and bought supplies for his wrecking business and for the tugs, and under the same designation ordered the repairs for the Sea Gull for which the libelants below preferred their several claims. In each instance these supplies and repairs were charged to the Sea Gull, as other supplies or repairs were charged by them to the particular tug to which they were furnished. Under the same designation, Murdock was hired to sail the Sea Gull. Baldwin was not engaged in any sort of maritime business, and was a capitalist. He had nothing whatever to do with the Sea Gull, was never in possession, had no interest in her earnings, and knew nothing of her employment or situation. He gave Reid no employment or authority to act for him, or in any way charge him for supplies or repairs, and was never consulted about the repairs now sued for by either Reid or any of appellants. He knew nothing of Murdock's employment as master. When he entered upon this agreement to aid Reid in buying the Sea Gull, the latter agreed to keep her insured, and did take out insurance to the extent of about $27,000 in Baldwin's name as owner. Baldwin was ignorant of the fact of such insurance until after the loss of the boat by fire. Upon being apprised

Digitized by Google

of the loss and insurance, he made regular proof of loss, and has collected the greater part of the insurance money. Judge Swan, of the district court, dismissed the several libels, and appeals have been perfected and errors assigned.

F. H. Canfield, for appellants.

T. E. Tarsney and W. W. Wicker, for appellee.

Before TAFT and LURTON, Circuit Judges, and SAGE, District Judge.

LURTON, Circuit Judge, after making the foregoing statement of facts, delivered the opinion of the court.

Under general maritime law, there would be no lien upon the ship for repairs made on order of her master at a home port. The General Smith, 4 Wheat. 443; The Lottawanna, 21 Wall. 559; The Edith, 94 U. S. 518; The Samuel Marshall, 6 U. S. App. 389, 4 C. C. A. 385, and 54 Fed. 396. The repairs made which constitute the basis for the claims here asserted were made at Bay City, a port within the state of the residence of Baldwin, the person sought to be made liable as owner. Bay City was therefore a home, and not a foreign port, whether Baldwin or Reid be treated as owner. The Samuel Marshall, supra. If any lien was fastened upon the Sea Gull to secure the debt for repairs, it would arise alone upon the statute law of Michigan, and then only if the repairs were made upon the credit of the vessel. The Samuel Marshall, supra. The J. E. Rumbell, 148 U. S. 1–19, 13 Sup. Ct. 498. As the Sea Gull was totally destroyed before any libel, it is unimportant to consider whether or not any lien was acquired under the local law, for a lien on the res, dependent alone on local law, would not make the owner liable in personam, unless he would be so upon general principles of law. The evidence makes it clear that the real relation which existed between Reid and Baldwin was that of mortgagor and mortgagee. Baldwin held the legal title as mere collateral security for the payment of debt, and upon payment was obligated to convey the Sea Gull to Reid. That it is competent to show by parol evidence that, although Baldwin had the title, he was, nevertheless, only a mortgagee, is well settled. That the tug was registered in his name does not prevent proof of the real relation. Morgan's Assignees v. Shinn, 15 Wall. 105; Winslow v. Tarbox, 18 Me. 132; Philips v. Ledley, 1 Wash. C. C. 226, Fed. Cas. No. 11,096; Howard v. Odell, 1 Allen, 85; Mitcheson v. Oliver, 5 El. & Bl. 419. Baldwin, as mortgagee, never had actual control of the vessel, never had possession, and was in no way interested in her earnings. That a mortgagee who holds the legal title, but who is not in possession, is not liable personally for supplies and repairs furnished the ship upon order of the mortgagor or master, is now well settled. Winslow v. Tarbox, supra; Howard v. Odell, supra; Philips v. Ledley, supra; 3 Kent, Comm. 134; McIntyre v. Scott, 8 Johns. 160.

But appellants claim that the evidence shows that Reid told some of them that Baldwin had purchased the vessel at the marshal's sale, and led them to believe that he was the owner; that they all knew that Baldwin appeared on the customs' registry as the owner, and Reid as the master; and that none of them knew that Baldwin only held the title as collateral security, or knew of the obligation

Digitized by Google

to convey to Reid when his debt was paid. In support of this position, counsel for appellants rely upon Story, Ag. § 298, where it is said:

"It will make no difference in respect to the liability of the owner, in case of repairs to ships, that by private agreement or charter party, between the owner and master, the latter is to have the entire ship to his own use for a specified period, and is to make all the repairs at his own expense, for such a private agreement cannot vary the rights of third persons."

This text is supported by the well-known case of Rich v. Coe, Cowp. 636. But the case cited and the doctrine stated apply only where the person sought to be made liable is the real owner, and the person ordering the repairs was the master appointed by the owner. In such case the existence of a secret agreement by which the master was to sail the ship on his private account, and himself keep her in repair, would not affect the rights of third persons ignorant of the charter party, and guilty of no negligence. This is the rule applied in the case of The Samuel Marshall, 6 U. S. App. 389, 4 C. C. A. 385, and 54 Fed. 396. The rule stated by Judge Story has its foundation in the liability of the owner for the engagements of the master within the well-defined limits of the authority implied from the office of master. But the real question in all such cases is, who is the contracting owner made liable by the master's conduct within the well-defined scope of a master's implied authority? The mortgagor, although he holds the title, and appears in the registry as the owner, is, if out of possession, not the owner whom the master is authorized by law to bind for repairs made on his order. Whatever doubt may have been entertained at one time, it is now well settled that a mortgagee out of possession is not the owner made liable by repairs made on order of the mortgagor or the master. 3 Kent, Comm. pp. 133, 134. Neither is the case altered because the mortgagee holds the legal title under a bill of sale absolute on its face, and stands upon the registry as the owner. The latter circumstance does not change the real relation of the mortgagee, and does not by itself estop him from showing that he was not the owner when sought to be made liable for repairs. The owner who is made liable by the master's act is the owner whose agent he is, and from whom he derived his authority.

The books contain many cases in which there concurred the facts here relied upon to estop the defendant from denying his liability. Thus, in the case of Mitcheson v. Oliver, 5 El. & Bl. 419, the action was for repairs, and work done, and materials furnished to fit out the ship Progress on order of one who appeared on the registry as her master. The defendant appeared on the same registry as owner. But the defendant showed in defense that he had agreed to sell the Progress to one G., by a contract in writing, unregistered and unknown to the plaintiffs, and that the master had actually been appointed by G., though circumstances, including the enrollment, led plaintiffs to suppose him to have been appointed by O. A verdict in favor of plaintiffs was set aside by the court of queen's bench, upon the ground that there had been a misdirection, and that the jury had come to a wrong conclusion, and that the verdict ought to have been for the defendant. Park, B., among other things, said:

Digitized by Google

"None of us, I believe, have doubted that the jury came to the wrong conclusion, and that the verdict ought to have been for the defendant, on this single ground that no contracts can bind a defendant unless made by some one who had real authority to bind him, or unless the defendant is precluded from denying that there was authority in the person who made the contract. It is perfectly settled now that the liability to pay for supplies to a ship depends upon the contract to pay for them, and not on the ownership of the ship. We are all satisfied that, on this evidence, the jury ought not to have found Thomson really agent for the defendant in making this contract, nor that the defendant held out false colors, representing that Thomson had authority to bind him, when in point of fact he had not, so as to induce the plaintiffs to believe that he could make the contract for the defendant, and that the plaintiffs acted in the supply on that belief."

Touching the summing up of the trial judge, the court said:

"Lord Campbell told the jury that 'the defendant would not be liable to the plaintiffs' demand, merely as owner of the ship, nor by reason of this being registered as such owner; nor would he be liable merely by the orders being given to the plaintiffs by the registered master of the ship,' and so far the direction is perfectly accurate; but then comes an enumeration of the circumstances under which the defendant 'might be liable,' which must be understood as meaning that, if the jury found that these circumstances all existed, they should find for the plaintiffs. We think that this enumeration is defective. The circumstances enumerated are: If the defendant 'remained in possession of the ship, and held himself out as owner, and if a person acted as master of the ship with his privity and consent, and the goods and work were supplied to and done upon the ship upon the credit of the owner, by the bona fide orders of the master, given with the privity of the owner, and if the goods and work were fit, necessary, and proper for the ship, under the circumstances in which she was placed, and fit and necessary for the purposes of the ship, at the time of the orders.' Now, we think that, though all these circumstances existed, yet it would not be enough to render the defendant liable, unless the person acted as the defendant's master of the ship with his privity and consent, and the goods and work were supplied to and done upon the ship, not merely 'upon the credit of the owner, by the bona fide orders of the master given with the privity of the owner,' but as on a contract with the owner on orders given by the master as for him. Now, in this case, on the evidence, it appears that the defendant did not, by word or deed, in any way hold out Thomson as his master; and therefore the defect in this part of the summing up is material, and would influence the verdict."

The mere fact that one stands on the registry as the owner by no means determines that he is the contracting owner made liable through the agency of the master. 3 Kent, Comm. pp. 133, 134.

In Howard v. Odell, 1 Allen, 85, the facts were these: The ship was registered as owned by Odell & Kidder. The plaintiff sold supplies for the ship to Odell. Upon inquiry made when the first bill was made, Odell said that the ship was owned by Odell & Kidder. Afterwards plaintiff sent to the customhouse, and found her so registered. The charge was made to the ship. The fact was that Kidder held a bill of sale absolute on its face for one-half of her from one Wilson, which was duly recorded. But it was shown that in fact Kidder only held this title as collateral security for the payment of a debt due him from Wilson, and never exercised any acts of ownership over her, nor authorized Odell to in any way incur liability for him. Upon the facts, it was sought to hold Kidder personally liable for repairs and supplies ordered by Odell. The court held Kidder not liable. Bigelow, C. J., delivering the opinion of the court, after saying that it was settled that the mortgagee of a vessel

Digitized by Google

not having her in his possession or control was not liable for supplies or repairs furnished on the order of the master or mortgagor, said:

"Nor does the fact that the register or enrollment of the vessel stands in the name of the mortgagee, and that his apparent title on the record is by a conveyance absolute in form, of itself operate to render him liable for debts contracted for supplies and repairs. The real question in all such cases is: With whom was the contract made, and was the person who made it authorized to bind the mortgagee? If the mortgagee was not in possession of the vessel, and did not receive the benefit of her earnings, or exercise any control over her, but only held his title as collateral security for his debt, then it is very clear that neither the master nor the mortgagor could claim to act as his agent, or bind him by their contracts. In such case there is no authority, either express or implied, by which they can undertake to act in his behalf. Doubtless the mortgagee may, by his acts, hold himself out as the real owner of the vessel in such a way as to lead persons to believe that the master or mortgagor is his agent, authorized to make contracts concerning the vessel. He would then be bound by them, under the ordinary rule of law regulating the relation of principal and agent. * * * Indeed it would be giving altogether too much weight to the registry and enrollment of vessels to hold that persons whose names appeared therein as owners were thereby made liable for repairs and supplies. Every one conversant with shipping and commercial dealings knows that vessels are often employed under charter parties, by which even the real owners are exempted from all charges incurred in their management and navigation. Whenever the charterer is, by the terms of his contract, deemed to be owner pro hac vice, no liability for supplies or repairs attaches to the actual owner of the vessel in whom the legal title is vested. It is therefore well understood among all persons engaged in the business of making repairs or furnishing supplies that their right to recover payment therefor does not depend on the registry or enrollment, but on the right and authority of the person with whom they deal to act as agent for the owners, and to bind them by his contracts. The real transaction between the parties is to be looked at, in order to ascertain whether that which appears by the registry to be a legal title in a particular person is or is not such an ownership as will authorize the person making the contract to act as agent. An equitable title in one person, having the control and possession of the vessel, may well consist with a documentary title at the customhouse in another person." Philips v. Ledley, 1 Wash. C. C. 226, Fed. Cas. No. 11,096; Winslow v. Tarbox, 18 Me. 132; Duff v. Bayard, 4 Watts & S. 240; McIntyre v. Scott, 8 Johns. 159; Wendover v. Hogeboom, 7 Johns. 308.

In the case before us, it turns out that, though Reid stood on the enrollment as the master, he was not acting as master when these repairs were ordered. James Murdock was actually the master controlling the navigation of the Sea Gull, and was appointed to that place by Reid. That Murdock was acting as master was known to appellants. That his name had not been inserted in the license does not affect his actual status as master, for the registry and enrollment statutes are only for the protection of the revenue, and failure to have his name inserted as master would not affect Murdock's actual authority as master. The Boston, 1 Blatchf. & H. 309, Fed. Cas. No. 1,669; Steamboat Co. v. Scudder, 2 Black, 385. If one holds and exercises the position of master of a ship, the position at once gives him authority, and at the same time defines it. But here appellants cannot rely upon the implied authority of Reid as a master, because he was not in fact master, and was not at the time these repairs were made acting as master. These repairs were ordered by him in the character, as libelants understood, of "manager." Now, this is an agency unknown in general maritime law,

Digitized by Google

and the authority implied from such a position is in that law undefined. There is evidence in the record that there is a custom on the lakes for lines of boats to be placed under the general direction of an officer representing the owner, called a "manager," and that such managers contract for supplies, repairs, etc. It is also shown, though the matter would be evident without proof, that the principals represented by such manager are sometimes mere charterers of vessels. That, at last, would only bring us back to the point from which we started, namely, that the persons bound by the acts of such an agent would be those appointing him to the place. Now, there is not the slightest doubt of the fact that Baldwin never did appoint Reid to the place of "manager." Neither did Reid represent himself as managing for Baldwin. The clearly-established facts are that James Reid and his sons were partners, under the firm name of Reid & Sons, and under this firm name were engaged in wrecking and towing. In this business they employed two tugs, the Sea Gull and the Parker, and sometimes a third, the Manistique. Of this business James Reid was manager. The appellants have chosen to regard him as manager of the Sea Gull for Baldwin, who they understood was her owner. Now, there are three ways in which a person can be bound on a contract: First, when he himself has made it; second, when an agent really authorized to bind him has made the contract for him as principal. There is no evidence to support a liability based upon either of these grounds. The third and last method by which one may be bound is where a person has made a contract for him as principal, not really having authority to do so, but that the conduct of the supposed principal has been such as to preclude him from denying that there was authority.

This brings the case down to this question: What did Baldwin do which amounted to such a holding out of Reid as his manager as that he should now be precluded from denying that he was his agent in fact? The facts that he held a bill of sale absolute on its face, and that the vessel stood on the registry in his name as owner, were not of themselves such a holding out of himself as owner and Reid as his master as to preclude him from showing that he was not the owner, and that Reid was not his master; yet there is much more color for claiming that he ought to be estopped from denying that he was the real owner, and Reid his master, than there is for precluding him from denying that Reid was his "manager." The circumstance that in the enrollment he had stated that Reid was then the master might plausibly lead one to suppose him to be his master, and preclude him from denying liability within the well-defined limits of a master's office for his acts as master. But at the time Reid was doing business as "Reid, Manager," he was no longer exercising the authority of master of the Sea Gull. Another was in that situation, and exercising its authority. It is very clear that something more must be shown than that the title and registration stand in his name in order to preclude him from denying that Reid was his manager. No one pretends that Baldwin, by any affirmative act or word, held him out as managing the Sea Gull for him. Reid himself made no such representation. There was noth-

Digitized by Google

ing in the circumstances, other than the condition of the legal title and the enrollment, calculated to lead libelants into believing that Reid was "managing" the Sea Gull for Baldwin. The general business conducted by Reid, and his employment therein of other vessels known not to belong to Baldwin, were calculated to make them believe that Reid was managing the Sea Gull, as he was the other tugs, for himself and those connected with him in the business of Reid & Sons. It is indeed difficult, on the evidence in this case, to believe that libelants supposed that they were extending credit to Baldwin, and that he was the person with whom they were dealing as the contracting owner. If it is sought to charge Baldwin with a contract for him as principal, made through one not really having authority to bind him, it is absolutely essential to show two things: First, that libelants at the time supposed him to be the contracting person or one of the contracting persons; and, second, that the conduct of the supposed contracting principal has been such as to preclude him from denying that there was authority. Now, the evidence falls far short of what is necessary in respect to both divisions of the question. To say that credit was given to the Sea Gull, or that credit was given to the vessel and her owner, or that credit was given to Baldwin, is quite unsatisfactory. In the case of The Samuel Marshall, heretofore cited, where the question was as to whether certain supplies had been furnished upon the credit of the vessel, this court, speaking through Judge Taft, said:

"The fact that the supplies were charged against the vessel on the books of the libelants is evidence only of a self-serving practice which has no particular weight in the determination of this question." 6 U. S. App. 401, 4 C. C. A. 392, and 54 Fed. 403.

The evidence in this case shows that such a charge was habitual without regard to the circumstances. So, the statement that credit was given to Baldwin is even less satisfactory, for no corresponding charge was made, and no statement was made by either party indicating that such credit was asked or given. Indeed, the practice of saying to juries, in cases where it is sought to charge one other than the person actually procuring the supplies or repairs, that the question is, "To whom was the credit given?" has been most pointedly condemned as misleading.

In Mitcheson v. Oliver, 5 El. & Bl. 419–437, where the question was whether the ostensible owner of the vessel was bound by repairs made on order of the master, Park, B., said in regard to the liability of Oliver, the defendant sued as contracting owner:

"Supposing that Oliver had said or done something inconsistent with the true facts, which does not appear to be the case, still it would not bind him unless the plaintiff supplied the goods on the faith that Oliver was the contracting person. I purposely avoid saying 'on Oliver's credit,' a phrase which I wish were never used, as it constantly misleads juries into thinking that something short of being the contracting party will make a person liable."

Upon the other branch of the evidence necessary to make out a case which should preclude the appellee from denying Reid's authority, appellants have failed more signally. That Reid took out insurance upon the Sea Gull in Baldwin's name is of no significance upon this question of false colors held out by Baldwin, for the rea-

Digitized by Google

son that this insurance was not procured until after the repairs were made. As evidence of an agency in fact, it has some weight, but could not have been a misleading circumstance inducing them to believe that Reid was managing for appellee. That insurance was procured by Reid for his own benefit. It is true that Baldwin was collaterally interested, but that is wholly due to his creditor relation. That it was taken out in his name, and that he has collected it, is due to the situation of the title. Baldwin's ratification of Reid's act in taking this insurance in his name cannot help appellants in any view of the case. The subsequent ratification of an originally unauthorized act operates as a previous authority only as between the parties to the contract ratified. But, were it otherwise, an authority by a mortgagee to the mortgagor to take insurance in the mortgagee's name would not include an authority to bind the mortgagee for extensive repairs upon the property to be insured, even though without such repairs the vessel was uninsurable. The agency for such a purpose would not bring within its scope so foreign a matter as repairing the subject-matter of insurance.

The libel of James Murdock stands upon even less firm ground than those of his co-appellants. The decree dismissing all of the libels must be affirmed, with costs.

(79 Fed. 107.)

VAN DEN TOORN v. LEEMING et al.

(Circuit Court of Appeals, Second Circuit. February 23, 1897.)

GENERAL AVERAGE — WHEN ALLOWED — REPAIR OF CRACKED SHAFT — SUBSEQUENT BREAKDOWN.

A steamship bound for New York discovered a crack in her shaft when about 316 miles from Sandy Hook. The shaft was strengthened by bolts, and she proceeded at reduced speed until 16 miles from Sandy Hook, when the shaft broke and greatly damaged the machinery. Contribution was claimed on the ground that the risk to the ship was foreseen, and deliberately undertaken in order to save the ship and cargo the great expense of towage. The evidence showed, however, that, while the officers recognized the possibility of a new breakdown and further damage, they confidently believed that it could be avoided. *Held*, that there was no such voluntary sacrifice of the ship to save cargo as was necessary to make a case of general average. 70 Fed. 251, affirmed.[1]

Appeal from the District Court of the United States for the Southern District of New York.

This was a libel in personam by William H. Van Den Toorn, as agent and trustee, against Thomas Leeming and another, to enforce contribution in general average from defendants as consignees of certain cargo shipped on board the steamship Schiedam. The district court rejected the main item of damage for which contribution was claimed (70 Fed. 251), and the libelant has appealed.

Harrington Putnam, for libelant.

Clifford A. Hand, for respondent.

[1] On the subject of general average, see note to Pacific Mail S. S. Co. v. New York, H. & R. Min. Co., 29 C. C. A. 357.

Digitized by Google

Before WALLACE, LACOMBE, and SHIPMAN, Circuit Judges.

SHIPMAN, Circuit Judge. The libelant, in behalf of the steamship Schiedam, filed a libel to recover from the respondents $1,158.90, as the contribution from their part of the cargo for general average expenses incurred by the ship. The district court decreed payment of $181.21, which was the amount admitted to be due after the rejection of the damages which were held not to be properly included in general average. From this decree the libelants appealed.

The facts of the case are succinctly stated by the judge of the district court, as follows:

"The above libel was filed to enforce the payment of general average contribution against one of the consignees of cargo on board the steamship Schiedam, which arrived in this port from Rotterdam on July 14, 1891. When 316 miles to the eastward of Sandy Hook, on the evening of July 10th, between half past 7 and 8 o'clock, a crack 18 inches long was discovered on one side of the main shaft, mostly inside of the after bearing, and about 2 feet from the crank. This was temporarily repaired during the 24 hours following by drilling the shaft, which was 14½ inches in diameter, and inserting two iron bolts, 11 inches long and 1⅜ inches in diameter, across the line of the crack. The ship then proceeded on her voyage at about three-fourths of full speed (making 37 or 38 revolutions per minute, instead of 50 to 52, full speed), without interruption, for 38½ hours, to within about 16 miles of Sandy Hook Lightship, when, after having thus made about 300 miles, the shaft suddenly broke wholly off at about 10 a. m. of July 13th, at the original place of fracture. The fractured parts, riding each other, carried away the bearings, damaged the bed plate and channel way, and did much other injury to the machinery. At about 2 p. m. of the same day the ship was taken in tow by a tug, and reached Quarantine, at Staten Island, at 9 p. m. For this latter service $1,000 was allowed as salvage compensation. The Schiedam, 48 Fed. 923. A general average account was afterwards adjusted, amounting in all to $17,508.65. In this charge was included, not only the expense of the towage last named, with other items concerning which there is but slight difference, but also charges to the amount of about $13,000 on account of the damage done to the vessel and machinery by the last violent breakdown of the shaft. No charge was made for the cracked shaft itself, nor for any injury supposed to have been done to the bearings before the repair to the shaft was made."

The only matter in controversy was the liability of the cargo to pay its proportional part of the damage to the ship which resulted from the final break of the shaft. The claim for general average was founded upon the alleged fact that the risk of a great injury to the vessel was foreseen, and was deliberately undertaken in order to protect the cargo and ship from the large salvage expenses which would be incurred if towage was accepted as an alternative, and that thus the consequences of the final breakdown were a sacrifice voluntarily undertaken for the benefit of cargo and vessel.

The principles which are at the foundation of general average were elaborately discussed before the supreme court in the cases of Barnard v. Adams, 10 How. 270; Dupont de Nemours v. Vance, 19 How. 162; and in The Star of Hope, 9 Wall. 203. In the first-named case, the court announced, with precision, the three things which must concur "in order to constitute a case for general average," which can be summarized as follows: (1) A common, imminent danger, to be overcome by voluntarily incurring the loss of a portion of the whole to save the remainder; (2) a voluntary casting away of some portion of the joint concern for the purpose of saving the residue; (3) the

Digitized by Google

attempt must be successful. The controversy in this case is not in regard to the principles which are applicable to it, but it is whether the facts are those which ought to exist in order to create a case for general average. We say "ought to exist," for it is worthy of note that the tendency of modern adjustments is to enlarge the boundaries of expenses which are included in the adjustment. The question of fact is whether there was, at the time of the repair of the shaft and the decision to proceed to New York under the vessel's steam, a voluntary, expected sacrifice of anything; whether there was even a decision to enter upon a peril to the ship; or whether it was the usual case of repair, in the belief that the port of destination, 316 miles distant, could be reached in safety. Upon this point we fully concur in the conclusion of the district judge that:

"The evidence going to show any expected sacrifice on the part of the ship, or an expectation of such damage as actually happened, is not as strong or as convincing as is stated in the libelant's argument. The evidence hardly shows more than the recognition of a possibility of injury, but with a confident expectation that any breakdown would be avoided."

The testimony of the chief engineer, who was, presumably, the officer most conversant with machinery, is significant. In reply to the question by the counsel for the libelant, "Why was it that you decided to make these unusual repairs, and take these risks of proceeding under your own steam, instead of taking a tow?" he said: "In the first place, I knew that I could make the repairs, and that it could do the work, as was evident by its going 300 miles. And, in the second place, it was for the purpose of saving the expense of being towed." Both the captain and the engineer knew the possibility of a new breakdown, and the probabilities of further damage if the renewed break occurred; but that their decision amounted to a determination to sacrifice the vessel, if need be, in order to save towage, does not seem to have occurred to them. The efficiency of the repairs was not as lasting as the engineer expected, for an injury to the ship subsequently happened; but this unsuccessful result does not entitle the ship to classify the use of the machinery and its injury, after a repair which was entered upon without foreboding, as a voluntary sacrifice for the purpose of rescue from a common danger. Our attention has been called to the provisions of the seventh York Antwerp rule, as indicating the recognition of the principle that the damages to the machinery of the Schiedam should be allowed. The rule is as follows:

"Damage caused to machinery and boilers of a ship, which is ashore and in a position of peril, in endeavoring to refloat, shall be allowed in general average, when shown to have arisen from an actual intention to float the ship for the common safety at the risk of such damage."

The circumstances to which that rule is limited did not exist in this case. The decree of the district court is affirmed, with costs.

Digitized by Google

(79 Fed. 117.)

THE TITAN.

LEGG et al. v. THE TITAN et al.

(Circuit Court of Appeals, Second Circuit. February 23, 1897.)

COLLISION—TUGS AND TOWS.

A steamer, with tows lashed to her side, and a tug aiding her on a hawser ahead, after passing up the eastern side of Blackwell's Island, with a flood tide of about five miles an hour, turned to cross the head of the island, to make a landing at Eighty-Sixth street, New York. In so doing, they attempted to cross the bows of a small tug, with two heavy tows, which was coming up the west side of the island, and which failed to hear their first signal. A collision resulted, causing the loss of a tow. *Held*, that the first-mentioned steamer and tug were guilty of contributory fault, in failing to observe that the other tug would be unable to check her tows sufficiently in the strong tide to pass behind them, and in not keeping further away and allowing a wider margin of safety.

Appeal from the District Court of the United States for the Southern District of New York.

Goodrich, Deady & Goodrich, for appellants.

James J. Macklin and Louis B. Adams, for appellees.

Before WALLACE, LACOMBE, and SHIPMAN, Circuit Judges.

WALLACE, Circuit Judge. This is an appeal by the owners of the steam vessels the Titan and the Thomas Hunt from a decree condemning them, together with the steam tug Unit, for the loss of the schooner Isle of Pines and her cargo in consequence of a collision between the schooner and a barge in tow of the Titan and the Hunt. The owner of the Unit has not appealed, and the sole question, therefore, is whether there was contributory fault on the part of the appellants' vessels in causing the collision. The collision took place in the East river in the forenoon of June 19, 1893, in the westerly channel, near the upper end of Blackwell's Island, and opposite Eighty-Sixth street, New York City.

The steam tug Unit, having in tow the schooner Isle of Pines, lashed on her starboard side, and the schooner Ella Frances, lashed on her port side, was proceeding up the westerly channel of the river, between New York City and Blackwell's Island, on a flood tide of about 6 miles an hour, making a speed in addition of about 2 miles an hour. The steamboat Thomas Hunt, with the steam tug Titan ahead, attached to the Hunt by a hawser about 30 fathoms long, the Thomas Hunt having two barges in tow,—the Vanderbilt, lashed on her starboard side, and the Warren, lashed on her port side,—each projecting about 25 feet beyond her stem, were proceeding up the easterly channel of the river, intending to land at Eighty-Sixth street, on the westerly side of the East river. The Hunt, with her fleet, was making a speed of about 10 miles an hour with the tide, which was running in that channel at about 5 miles. Shortly before reaching the upper end of the island the Hunt discovered across the island the Unit and her tow; the latter at the time being nearer the Blackwell's Island shore than the New

Digitized by Google

York shore, nearly opposite Eighty-Fifth street, and not far behind the Hunt. Before turning to cross the head of the island, the Titan had blown a long whistle, indicating her intention to land at Eighty-Sixth street, but this was not heard by the Unit. After she had turned to cross the river to her landing, and while the Hunt was rounding the head of the island, the Titan blew another whistle to the Unit, indicating her intention to cross the river in front of the Unit. The Unit immediately answered the signal with a single blast of her whistle, and followed this very quickly with alarm whistles, and reversed her engine. The Titan cast off the hawser of the Hunt, and the Hunt reversed her engines; but the bow of the Isle of Pines came in collision with the bow of the Vanderbilt, causing the Isle of Pines to sink. When the alarm signals were given, the Titan was making directly across the river, and had passed or was passing in front of the Unit, and the Unit had headed somewhat to the easterly in the attempt to pass astern of the Hunt.

We are satisfied, upon a careful reading of the proofs, that, when the Titan rounded the head of the island to cross the river, she did not make sufficient allowance for the inability of the Unit to control her tows in the strong tide and reduce her speed sufficiently to pass between the Hunt and the head of the island, and that this was due to the failure of the pilot of the Titan to vigilantly observe the Unit. The Unit was an old and small tug, and both of her tows were deep-laden with cargo, and her power was insufficient to hold her tows against the strong flood tide. If the pilot of the Titan had carefully observed her when he began to shape the course of his vessel to cross her bows, he would have discovered that, incumbered as she was, she could not check her speed efficiently and quickly change her course, and that unless she could she would be unable, within the time required, to pass astern of the Hunt without risk of collision. There was plenty of room for the Titan to allow a larger margin of safety for the maneuver. If the Titan had kept further away in the direction of Mill Rock, as she might have done, all hazard would have been avoided. This would have been more inconvenient for the Titan, but it was obviously the more prudent course. The answering signal from the Unit, given as it was when the risk of collision was so obvious that it was immediately followed by her alarm whistles, had no appreciable effect upon the conduct of the Titan or the Hunt. We agree with the district judge that the attempt by the Titan and the Hunt to cross the bow of the Unit was dangerous and unjustifiable, in the circumstances of the situation.

The decree is affirmed, with interest and costs.

Digitized by Google

(79 Fed. 129.)

DODSON v. FLETCHER.

(Circuit Court of Appeals, Eighth Circuit. March 1, 1897.)

No. 827.

APPEAL—DEFECT OF PARTIES—VOLUNTARY APPEARANCE.

It is not competent for parties to confer jurisdiction on the circuit court of appeals to review a judgment, six months after the judgment or decree sought to be reviewed was entered, by the voluntary appearance of necessary parties to the appeal. Accordingly, *held*, that an order of dismissal of an appeal, for want of necessary parties, would not be vacated, upon their admission of service of the citation and entry of appearance.

Appeal from the Circuit Court of the United States for the Eastern District of Arkansas.

J. D. Cook, for the motion.

W. C. Ratcliffe and John Fletcher, opposed.

Before CALDWELL, SANBORN, and THAYER, Circuit Judges.

PER CURIAM. A motion to set aside the order of dismissal, which was entered in this case on January 26, 1897 (78 Fed. 214),[1] has been filed; and the motion is supported by an acknowledgment of service of the citation, and by an entry of appearance of certain parties who were made parties to the original suit, but were not made parties to the appeal. On these papers we were asked to vacate the order dismissing the cause. The application, however, must be denied. The decree from which the appeal was taken was entered on May 1, 1896. T. M. Dodson perfected his appeal by filing the necessary bond on May 23, 1896. The only defendant who is made a party to the appeal is John G. Fletcher, trustee. The act of congress creating this court allows six months within which to perfect an appeal. When the six months limited had expired, no appeal had been perfected upon which this court could review the decree of the trial court. We think that it is not competent for parties to confer jurisdiction upon this court to review a judgment, six months after the judgment or decree sought to be reviewed was entered, by the voluntary appearance of necessary parties to the appeal. The motion to set aside the dismissal and for leave to enter the appearance of certain parties is denied.

[1] 24 C. C. A. 69.

Digitized by Google

(79 Fed. 133.)

WHITE v. TOLEDO, ST. L. & K. C. R. CO.

(Circuit Court of Appeals, Second Circuit. March 19, 1897.)

CONSTITUTIONAL LAW—EQUITY RULE 67—EXAMINERS—TAKING TESTIMONY OUTSIDE DISTRICT—COMPULSORY ATTENDANCE OF WITNESSES.

The power conferred upon the supreme court by the act of August 23, 1842 (5 Stat. 518; Rev. St. § 862), to prescribe the forms and modes of taking and obtaining evidence, is valid and constitutional, and under the amendment to the sixty-seventh equity rule, adopted pursuant to such power, the courts of the United States are authorized to appoint examiners to take testimony orally beyond the limits of the district in which a suit is pending, and the attendance of witnesses before such an examiner may be compelled by the courts in the district to which the examiner is sent.

In Error to the Circuit Court of the United States for the Southern District of New York.

J. Tredwell Richards, for plaintiff in error.
Joseph King, for defendant in error.

Before PECKHAM, Circuit Justice, and WALLACE and SHIPMAN, Circuit Judges.

SHIPMAN, Circuit Judge. This is a writ of error to set aside an order of the circuit court for the Southern district of New York which adjudged the plaintiff in error to have been guilty of contempt.

Irvin Belford was appointed special master by the circuit court of the United States for the Northern district of Ohio, in a bill in equity for the foreclosure of a railroad mortgage which was pending in that court, and was directed to take testimony in the suit in the city of New York. Upon the petition of one of the parties, an order was granted by the circuit court for the Southern district of New York which directed the clerk of that court to issue a subpœna addressed to Isaac W. White, then of said city, and directing him to appear before said master at a named time and place in said city and testify in that suit. The subpœna was duly issued and duly served upon White, who refused to obey and did not obey it. Upon an order requiring him to show cause why he should not be punished for contempt, he appeared before the circuit court, and upon hearing he was adjudged guilty of a contempt of court by reason of his disobedience to the order of the subpœna.

The questions presented upon the writ of error are whether the circuit court for the Northern district of Ohio had power to appoint an examiner or a special master to take testimony in the city of New York, to be used in a suit pending in that court, and whether the circuit court for the Southern district of New York had power, by its subpœna, to compel a witness in its district to testify under oath before such special master in a cause pending beyond its jurisdiction.

The ancient general English chancery rule excluded oral testimony, and received at the hearing only that which was contained in written depositions. 1 Greenl. Ev. § 312. But section 30 of the judiciary act of 1789 provided that "the mode of proof by oral testimony and

Digitized by Google

examination of witnesses in open court shall be the same in all the courts of the United States, as well in the trial of causes in equity and of admiralty and maritime jurisdiction as of actions at common law." Section 25 of the statute of April 29, 1802 (2 Stat. 166), modified this provision, and left "it to the discretion of the courts in those states where testimony in chancery is taken by depositions, to order, on the request of either party, the testimony of the witnesses to be taken by depositions." Conn v. Penn, 5 Wheat. 424. Section 6 of the statute of August 23, 1842 (5 Stat. 518), empowered the supreme court, from time to time, to prescribe and regulate the forms and modes of taking and obtaining evidence in all cases. This section is now reproduced, so far as equity and admiralty suits are concerned, in sections 862 and 917 of the Revised Statutes, so that the supreme court has been vested with sufficient apparent power upon the subject. At the December term, 1861 (1 Black, 6), the sixty-seventh rule in equity was amended by the supreme court so that, after notice by either party that he desired the evidence in the cause to be taken orally, "all the witnesses to be examined shall be examined before one of the examiners of the court, or before an examiner to be specially appointed by the court." The amendment further provided that in case of refusal of witnesses to attend to be sworn, or to answer any question put by the examiner or by counsel or solicitor, the same practice shall be adopted as is now practiced with respect to witnesses to be produced on examination before an examiner of said court on written interrogatories. This practice had long been specified in the statute of January 24, 1827 (4 Stat. 197), which is reproduced in section 868 of the Revised Statutes, and which provided, in substance, that, when a commission was issued by any court of the United States for taking the testimony of a witness named therein at any place without any district, the clerk of any court of the United States for such district should issue a subpœna to the witness, and if the witness, after service of the subpœna, refused to appear, the judge of the court whose clerk issued the subpœna could proceed to enforce obedience or punish the disobedience. The same practice is prescribed in equity rule 78, which is a reproduction of equity rule 28, announced by the supreme court in 1822 (7 Wheat. xi.), and one of the rules prescribed by the court in pursuance of the authority conferred by section 2 of the act of May 8, 1792, which will be hereafter stated (1 Stat. 272). Story v. Livingston, 13 Pet. 359.

This historical review of the statutes shows—what is familiar—that a court of the United States for one district had long been empowered to send a commissioner into any other district to take the testimony of a person residing in such district, and that the courts of the United States for the district wherein such testimony was to be taken were directed to issue process to secure and enforce the attendance of such witness before the commissioner or examiner, and that he was authorized to administer an oath to the witness. It also shows that in pursuance of power for that purpose, the validity of which will hereafter be considered, the supreme court, by its amendment of the sixty-seventh rule, adapted or enlarged this statutory system of practice and rules in regard to taking testimony by written

Digitized by Google

interrogatories to the taking of testimony in equity cases orally by specially appointed examiners or masters, and provided that the same system should exist to compel the attendance of a witness, and of punishment for disobedience to the subpœna, or for refusal to be sworn. That the intention of the sixty-seventh rule was to provide that examiners could be appointed to take testimony orally beyond the territorial limits of the district in which the suit was pending was decided by Mr. Justice Bradley in Railroad Co. v. Drew, 3 Woods, 691, Fed. Cas. No. 17,434, and was not strenuously denied upon the argument of this case. The point which was relied upon was that the jurisdiction of the courts of the United States was a statutory jurisdiction, and could not be enlarged by a rule of the supreme court. This proposition, thus generally stated, is true, but it is not an adequate statement either of the nature or the extent of the authority by virtue of which the rule was made. Congress had in 1792 exercised, to a certain extent, its authority in regard to the "forms and modes of proceeding" in equity cases, "subject to such regulations as the supreme court shall prescribe" (1 Stat. 276), intending, as increased business should indicate the need of additional rules, to intrust to the supreme court the duty of making them as necessity required. The extent of this class of powers, their character, and the propriety of committing them to the supreme court, were fully considered by Chief Justice Marshall in Wayman v. Southard, 10 Wheat. 1,—an action at common law,—who said, in substance, that, while congress could not delegate to the courts powers which "are strictly and exclusively legislative," yet there were other subjects, of "less interest, in which a general provision may be made, and power given to those who are to act under such general provisions to fill up the details," but that it was true that it was not easy to draw the exact line which separates the "important subjects, which must be entirely regulated by the legislature itself," from the details, which they can properly intrust to others. The effect and the extent of the conclusions which Chief Justice Marshall reached were again considered by the supreme court in Beers v. Haughton, 9 Pet. 338, 359, and were stated by Judge Story as follows: "The constitutional validity and extent of the power thus given [by the statute of 1792] to the courts of the United States to make alterations and additions in the process, as well as in the modes of proceeding in suits, was fully considered by this court in the cases of Wayman v. Southard, 10 Wheat. 1, and Bank v. Halstead, Id. 51. It was there held that this delegation of power by congress was perfectly constitutional; that the power to alter and add to the process and modes of proceeding in a suit embraced the whole progress of such suit, and every transaction in it, from its commencement to its termination, and until the judgment should be satisfied; and that it authorized the courts to prescribe and regulate the conduct of the officer in the execution of final process, in giving effect to its judgment. And it was emphatically laid down that 'a general superintendence over this subject seems to be properly within the judicial province, and has always been so considered,' and that 'this provision enables the courts of the Union to make such improvements in its forms and modes of proceeding as experience may

Digitized by Google

suggest.'" It thus appears that the constitutional character of the power under which the supreme court subsequently acted in making rule 67 was early the subject of discussion, that it was established, and that no jurisdictional question need now arise. Inasmuch as the validity of the power to appoint examiners to take testimony in another district and circuit, and of the power of the United States court within that other district to compel the witness to attend and take an oath before the examiner, is sustained by this inquiry, it seems proper to suggest that in the practical administration of this authority, and in the interest of economy, caution should be exercised not to grant too roving and unrestrained a commission to examiners to take testimony. The fear which was expressed in Arnold v. Chesebrough, 35 Fed. 16, lest these proceedings should become both unnecessary and expensive, is well founded. The order of the circuit court is affirmed, with costs.

(79 Fed. 170.)

FOSTER v. LINCOLN'S EX'R.

(Circuit Court of Appeals, Second Circuit. February 23, 1897.)

INSOLVENT NATIONAL BANKS—ASSESSMENTS AGAINST SHAREHOLDERS—TRANSFER OF SHARES.

L., a stockholder in the D. national bank, transferred his stock, shortly before its failure, to his married daughter and other minor children. It appeared from the circumstances surrounding the transaction that L., though perhaps not supposing the D. bank to be actually insolvent, was advised of facts, not generally known, which indicated such uncertainty as to its ability to stand a run, which had apparently begun, as to make it safer for him to dispose of his stock forthwith, and that the transfer was made with the intent that, if all came out well, his children should have the stock, while, if the bank met with disaster, he would not be obliged to throw good money after bad. *Held*, that the transfer so made could not stand against the creditors of the bank, and L. was liable, at the suit of its receiver, for an assessment on the stock.[1]

Appeal from the Circuit Court of the United States for the District of Vermont.

This is an appeal from a decree of the circuit court, district of Vermont. The suit was brought by the receiver of the First National Bank of Deming, N. M., to enforce an assessment made by the comptroller upon the stock of that bank against Benjamin F. Lincoln, of Lyndon, Vt., as one of the actual stockholders of the bank, and seeking to set aside a transfer made by him, shortly before the failure of the bank, to his children, who were made defendants. Lincoln died pending the litigation, and the action was revived and continued against his executor. The circuit court decreed in conformity to the prayer of the bill. 74 Fed. 382.

C. A. Prouty, for appellant.

W. L. Burnap, for appellee.

Before LACOMBE and SHIPMAN, Circuit Judges.

[1] As to who are liable to assessment as shareholders in insolvent national banks, see note to Beal v. Bank, 15 C. C. A. 130.

Digitized by Google

PER CURIAM. The appellant was himself president of the National Bank of Lyndon, and held 25 shares in the Deming bank. The Lyndon bank held 50 shares, and other individuals and banks in this vicinity held shares. As found by the circuit court, "on September 21, 1891, he transferred his stock in the Deming bank, in equal parts, to his five children, one of whom was a married woman, two of whom were minors, and all of whom were irresponsible for assessments on it." The transfer was without consideration. It was completed by issuing new certificates of stock in exchange for the old one before the bank failed, on February 3, 1892. Mr. Lincoln was also a stockholder in the First National Bank of Silver City, N. M., of which stock similar transfers were made at the same time. Both banks were practically under the same management, having the same president, and both failed at the same time, and are in charge of the same receiver.

The only question in the case is whether the transfer was so far fraudulent that, as between the creditors of the bank (represented by the receiver) and the defendants, it should be set aside. The defendant B. F. Lincoln testified that some time in June, 1891, he proposed to his wife to transfer property to the children; that the matter drifted along until about the 1st of September, when the children began to ask that he give them property; that he said to them he would give each of them $1,000 in New Mexico bank stock, and on September 21st he made the transfer in question; that he attended a meeting at the Merchants' Bank of St. Johnsbury, Vt., in September, 1891,—concededly, it was two or three days prior to September 21st. The meeting was held to consider what action to take in reference to telegrams sent to C. M. Chase, a director in the Lyndon bank, by C. H. Dane, the president of the First Deming, and by E. B. Chase, the cashier of the Silver City. C. M. Chase being absent at the time, his brother Henry Chase opened them, and it was on account of those telegrams that Lincoln attended the meeting at St. Johnsbury. He saw the telegrams, as he says, either at the meeting, or on the cars coming down. He further testified that he thought this was not the first time that telegrams had come from these Western banks for funds; that he did "not think the question of solvency of the Deming bank was discussed" at the meeting; that he did not transfer the stock in consequence of the receipt of the telegrams, or of anything that was said at the meeting; that at the time of transfer he valued the stock above par, and believed the bank to be solvent; that he expected dividends would be received, and that previous to the transfer no rumor or information had come to his knowledge touching the solvency of the Deming bank; and that he first had reason to suppose that the institution was insolvent about February 4, 1892. This testimony is that of an interested party, and should be weighed with the caution usually required when such testimony is under consideration, and it may be noted that his statement as to what took place at the meeting is somewhat indefinite. The telegrams referred to are as follows:

Digitized by Google

"September 15, 1891.

"To C. M. Chase, Lyndon, Vermont: Please remit, and notify by wire as soon as possible, $5,000 to First New York, account First Deming, and $3,000 to Western National, New York, our use. I don't need the sixty-six hundred for personal use. I forward by express to-day over $16,000 bills receivable as collateral. Everything quiet, but we need rediscounts for thirty or sixty days. Important. Answer. C. H. Dane."

"Silver City, N. M., Sept. 15, 1891.

"To C. M. Chase, Lyndon, Vt.: Remit as requested by Dane quick as possible. E. B. Chase."

From the other evidence in the case it appears that the meeting at St. Johnsbury was attended by the president and cashier of the Merchants' National Bank of St. Johnsbury, by two of the directors of the Citizens' Savings Bank of the same place, and by Lincoln and Henry Chase, representing the Lyndon bank. All three banks were interested in the Deming bank, and, although none of them cared to send the money, it was finally agreed that they would do so, contributing equally, since it was going to be a help. One of the persons present at the interview testifies that an explanation was made by Henry Chase, who was the uncle of the cashier of the Silver City bank, and brother-in-law of the president of the Deming bank, regarding the condition which led to the call for the loan; that the explanation was to the effect that C. H. Dane had been involved in a lawsuit with M. M. Chase, and report of foreclosure proceedings had caused some mistrust on the part of depositors, which had led to a withdrawal of deposits; that there ensued some discussion as to the probable length of time that the bank would be able to stand a continuing run. None of the other persons present at the interview explicitly contradicts this account.

It is well settled that when the holder of shares of stock in a national bank transfers them to a person known to him to be irresponsible, with the intent of escaping liability as a shareholder, such transfer will be held void as to the creditors of the bank. Bank v. Case, 99 U. S. 628; Bowden v. Johnson, 107 U. S. 251, 2 Sup. Ct. 246. Intent in such cases need not be separately proved by direct evidence; it may be found as an inference from all the facts in proof. Upon the evidence in this case, we have little doubt that defendants' testator, while he may not have supposed the Deming bank was actually insolvent, was advised of facts, not generally known, which indicated to him that there was such uncertainty as to its ability to stand a run, which had apparently begun, that it would be safer for him to dispose of his stock forthwith, and that the transfer was made to his irresponsible children with intent that, if all came out well, they might have it, while, if the bank should meet with disaster, he would not have to throw good money after bad. If made with such intent, it cannot stand against the creditors of the bank, whom the receiver represents. The decree of the circuit court is affirmed, with costs.

Digitized by Google

(79 Fed. 172.)

BAUSMAN v. KINNEAR.

(Circuit Court of Appeals, Ninth Circuit. February 15, 1897.)

INSOLVENT CORPORATIONS—UNPAID SUBSCRIPTIONS—SET-OFF.

A stockholder who is also a creditor of a corporation has no right to set off the debt of the corporation to him as against his unpaid subscription, after the corporation has become insolvent, and a suit in equity has been brought to wind up its affairs and distribute its assets, even though such debt arises upon an accommodation note given by him to the corporation because of his subscription, and to avoid an assessment on his stock. Bausman v. Denny, 73 Fed. 69, reversed.

Appeal from the Circuit Court of the United States for the Northern Division of the District of Washington.

Frederick Bausman, in pro. per.
John R. Kinnear, for appellee.

Before GILBERT and ROSS, Circuit Judges, and HAWLEY, District Judge.

GILBERT, Circuit Judge. The receiver of the Ranier Power & Railway Company appeals from a decree of the circuit court (73 Fed. 69) dismissing his bill as against the defendant, George Kinnear, in a suit brought against certain stockholders of the Ranier Power & Railway Company to require them to pay their subscriptions to the stock of said corporation. Kinnear held stock of the par value of $5,000. In his answer to the bill he alleged that he had paid the full amount of his subscription. The undisputed facts are as follows: On the 17th of October, 1891, Kinnear had paid three assessments of 5 per cent. each upon his capital stock, amounting in all to $750. On that date, a promissory note, due 90 days after date, payable to the corporation, for the sum of $3,197.29, was presented by an officer of the corporation to Kinnear for his signature, with the statement that Mr. Denny, the president, wanted to raise money for the company. Kinnear signed the note without question. The note was indorsed by David T. Denny, who was the president, and the largest stockholder. It was discounted at the bank, and the proceeds were used by the corporation in constructing its street railway. Subsequently to that date another assessment of 5 per cent. was made on the capital stock, and Kinnear paid his proportion thereof in the sum of $250. When the note fell due, it was renewed, and was regularly thereafter renewed until December 10, 1892. At each renewal other shareholders indorsed the note, and the interest was paid by the president or by the company. On February 15, 1893, when the last note fell due, the amount was increased to $5,000, and the increased amount thereof was obtained from the bank, and was used by the corporation as before. When the $5,000 note fell due, on May 16, 1893, it was renewed for one year; but it was made payable, not to the company, but to David T. Denny. In June of that year the receiver was appointed, and eight months later Kinnear paid the note in full. It was found in the opinion of the court below as follows:

Digitized by Google

"These notes were not given by Mr. Kinnear in payment for his stock, but were intended as a loan of credit, to assist the company at a time when it was incurring debts in the construction of its line of street railway, so as to enable the company to obtain funds without resorting to assessments upon its capital stock, which at that time would have been burdensome to its stockholders, and specially so to Mr. Kinnear. These notes were given, however, in consideration of Mr. Kinnear's liability for his unpaid subscription. He was not indebted to the company on any other account, and would not have loaned his credit to the company for any other purpose than to avoid being required to pay for his stock."

The court held, upon this state of the facts, that the defendant, Kinnear, had the right to have the money received by the corporation upon his note set off against his liability upon his stock subscription. The question presented for our consideration is whether, upon the facts so found, and the further facts as disclosed in the record, such offset was permissible.

The only evidence concerning the purpose for which the notes were given is found in the testimony of the defendant, Kinnear, and in that of Mr. Denny, the president, and in the books and records of the corporation. The books show assessments against the stock of Kinnear in the amount of $1,000, and a payment of the same, and a balance of $4,000 unpaid. No other assessments were ever made. Mr. Kinnear testifies that he signed the note for the purpose of paying his subscription, and that, while nothing was said on the subject, he believed at the time that the company understood that the note was given for the purpose of raising money on the subscription. Mr. Denny, in his testimony, denied that there was any such understanding. When the $5,000 note was given, it will be seen that the amount thereof was $1,000 in excess of the sum remaining unpaid upon the stock of Kinnear. It appears in the evidence that in June, 1893, Kinnear, hearing of the approaching insolvency of the corporation, applied to Denny for security. He testifies that the amount for which he sought security was the $1,000 by which the note exceeded his liability on his stock subscription. Nothing was said upon that subject, however. The property which was intended as security was conveyed by Denny to Kinnear, and consisted of lots belonging to Denny, of the value, at the time of the conveyance, of about $10,000, but subject to a prior mortgage of $3,000. The consideration recited in the deed was $10,000. At the time of the trial the value of the property had so far decreased that it was worth little, if any, more than the amount of the prior mortgage. Mr. Denny testified that he understood that it was the purpose of this conveyance to secure Kinnear against liability upon the whole amount of the note. He also testified—and it is not disputed by Kinnear—that it was not until sued in this action on his stock that the latter claimed that his stock had been already paid for by the note, and that the land was intended as security only for the $1,000 in excess of the stock liability.

The facts as found by the trial court and as disclosed by the evidence amount to this: That the appellee, by lending his credit to the corporation, became a creditor thereof in an amount exceeding the amount of his liability for unpaid stock, and that the inducement for such loan of his credit was the fact that he was a subscriber to the unpaid stock of the corporation. A stockholder who is also a

Digitized by Google

creditor of a corporation has no right to set-off as against his unpaid subscription, after the corporation has become insolvent, and a suit in equity has been brought to wind up its affairs and distribute its assets. The unpaid stock is held to be a trust fund for the purpose of paying the debts of the corporation, and as such it must be distributed among the creditors pro rata. The debt due to a stockholder is entitled to no preference over other debts, and he cannot require its payment by way of set-off, to the exclusion or postponement of other claims. The reason usually assigned for this rule is that the debt owing by the stockholder to the corporation after insolvency and that owing from the corporation to him are not in the same right, the former being a debt payable to a trust fund. The decisions upon this proposition appear to be unanimous. Sawyer v. Hoag, 17 Wall. 610; Scovill v. Thayer, 105 U. S. 143; Williams v. Traphagen, 38 N. J. Eq. 57; Thompson v. Bank, 19 Nev. 103, 7 Pac. 68; Carbon Co. v. Mills, 78 Iowa, 460, 43 N. W. 290; McAvity v. Paper Co., 82 Me. 504, 20 Atl. 82; Shickle v. Watts, 94 Mo. 410, 7 S. W. 274. In some jurisdictions the rule has been extended, not only to the distribution of the trust fund arising from unpaid subscriptions, but to the distribution of the fund obtained under proceedings to enforce the statutory liability of stockholders. Matthews v. Albert, 24 Md. 527; In re Empire City Bank, 18 N. Y. 199; Buchanan v. Meisser, 105 Ill. 638; Liquidators v. Troop, 31 Am. & Eng. Corp. Cas. 410. The reason of the rule applies to all cases of simple indebtedness from the corporation to a stockholder, and upon principle no distinction can be made on account of the purpose for which the debt was incurred, or the motives that prompted the stockholder to become a creditor. One who lends money to a corporation on account of the fact that he owes unpaid stock in the company is in no better attitude than one who lends money for other reasons. The court will not inquire into the reasons that actuated him. It is unimportant whether the appellee in this case loaned his credit to the corporation only because he was a subscriber to unpaid capital stock, or whether he loaned it on account of his desire for the success of its business, and his pecuniary interest therein as a holder of its stock. A stockholder who has advanced money to his corporation is no more entitled to the right of set-off than is the stockholder who has any other kind of claim against the company. Matthews v. Alberts, supra. The set-off, if made at all, must be made while the corporation is a going concern. It cannot be made after the insolvency has intervened, and a court of equity has been called upon to administer its affairs.

It is urged by the appellee that his defense to the suit does not rest alone upon the right of set-off, but that the evidence supports the allegation of his answer that his stock has been paid in full, and that the moneys realized on the notes which he signed for the corporation extinguished his stock liability. This view of the evidence is not only opposed to the findings of the circuit court, which, on appeal to this court, are controlling unless shown to be contrary to the weight of the evidence (Tate v. Holmes, 22 C. C. A. 466, 76 Fed. 664, and cases cited), but, in our view, it is not at all sustained by the evidence. When the first note was given, it was for an amount considerably less

Digitized by Google

than the amount of the appellee's liability on his stock subscription. At that time but three assessments of 5 per cent. each had been made. Subsequently another assessment of 5 per cent. was made, and was paid by the appellee. No call was ever made upon the stock for which the money realized on the notes could have been applied in payment. Nothing was ever said to indicate that it was the intention so to apply it. At no time did the amount of the note correspond with the unpaid subscription. The last note made was $1,000 in excess of that liability. When it was known that the company was in failing circumstances, the stockholder, instead of causing the money realized on his note to be applied in payment of his stock, sought security against his liability on the note, and received a deed which recited a consideration of $10,000, and which conveyed to him property the value of which was then much greater than the amount of his liability, if the measure of his liability was only $1,000 of the note. The whole transaction would appear to be one in which Kinnear, as a stockholder, had consented to help the corporation by the loan of his credit, with the expectation that the corporation would eventually be able to meet the note, and relieve him from liability thereupon, and with the expectation that he would probably never be called upon to pay the balance of his unpaid subscription to the stock. The decree dismissing the bill as to the defendant, Kinnear, is reversed, at the appellee's costs, and the cause is remanded for further proceedings not inconsistent with this opinion.

(79 Fed. 189.)

DENTON v. BAKER.

(Circuit Court of Appeals, Ninth Circuit. February 8, 1897.)

No. 316.

1. INSOLVENT NATIONAL BANKS—JUDGMENTS—RECEIVERS.
   While the receiver of an insolvent national bank may interpose and become a party to a suit to enforce a claim against the bank, he is not a necessary party to such a suit, and a judgment rendered against the bank by a court of competent jurisdiction, in a suit to which he is not a party, is binding upon the receiver, in the absence of fraud or collusion.
2. SAME—EQUITY JURISDICTION—REMEDY AT LAW.
   The holder of a judgment against an insolvent national bank, recovered upon a claim rejected by its receiver, has an adequate remedy by an action at law against the receiver, by the judgment in which the latter may be directed to recognize the claim, and he cannot resort to equity to compel the allowance of the claim by the receiver, or enjoin its rejection.

Appeal from the Circuit Court of the United States for the Northern Division of the District of Washington.

Frederick Bausman, for appellant.
L. C. Gilman, for appellee.

Before GILBERT and ROSS, Circuit Judges, and HAWLEY, District Judge.

Digitized by Google

ROSS, Circuit Judge. This was a suit in equity, to the bill of complaint in which the court below sustained a demurrer, interposed by the defendant, and, the complainant declining to amend, the court dismissed the bill. The appeal brings up the question of the sufficiency of the bill. The court below held that it did "not state facts sufficient to entitle complainant to relief in equity, and that complainant had an adequate remedy, if any at all, at law." Passing the allegations of the bill in respect to the citizenship of the respective parties, and in respect to the insolvency of the Merchants' National Bank of Seattle, and the appointment and qualification of the defendant, Baker, as receiver of that bank, it alleges that in the month of July, 1893, the bank was pressed for money with which to meet the demands of its creditors, and found itself under the necessity of obtaining a loan from the National Park Bank of New York; that, in order to get the collateral for such a loan, it borrowed from one Angus Mackintosh certain bonds and coupons, and in consideration thereof did, in writing, under date of July 26, 1893, acknowledge itself indebted to Mackintosh in the sum of $25,000, which sum it agreed and bound itself to pay Mackintosh with 8 per cent. interest thereon from July 1, 1893, in the event that it should not return the bonds and coupons to him on or before January 1, 1894, which agreement was, by a resolution of the board of trustees of the bank, duly authorized; that on the faith of that agreement the bank obtained the bonds and coupons from Mackintosh, and used them as collateral security from which to borrow money from the National Park Bank of New York, but has ever since failed, neglected, and refused to return the bonds and coupons to Mackintosh, or to pay him the consideration upon which they were obtained, and that neither the bonds nor coupons have ever been offered or tendered or restored by the receiver of the Merchants' National Bank of Seattle to Mackintosh or to the complainant; that about two years after the agreement between Mackintosh and the Merchants' National Bank of Seattle,—that is to say, on or about May 26, 1895,—the Merchants' National Bank became insolvent, and, the comptroller of the United States having appointed the defendant, Baker, receiver of its assets, the comptroller, on June 19, 1895, caused notice to the creditors of the bank to be published, requiring all persons having claims against the bank to present the same to the receiver, with the legal proof thereof, within three months from that date, and instructed the receiver to pass upon the claims presented to him, and to report to him (the comptroller) such claims as he might allow, which instructions were followed; that on August 15, 1895, Mackintosh filed his claim in the sum of $29,250 upon forms of proof furnished by the receiver, and in the manner prescribed by his office, annexed to which was a copy of the written agreement between Mackintosh and the bank, and a copy of the resolution of the board of trustees of the bank authorizing the same, which claim the receiver thereupon rejected; that Mackintosh thereafter, in writing, and for and in consideration of the sum of $16,000, assigned, transferred, and set over to the complainant the whole of his interest in the claim; that thereafter, and within the time prescribed by the comptroller, the complainant, upon forms sup-

Digitized by Google

plied by the receiver, and in accordance with the manner prescribed by his office, presented to the receiver a verified claim in the sum of $29,450, with proofs of the assignment of the claim from Mackintosh to himself, which claim of the complainant the receiver, on September 27, 1895, rejected, stating that the claim was the same already presented by Mackintosh; that thereafter, and on the 7th day of November, 1895, the complainant, as assignee of Mackintosh, did, in the superior court of King county, state of Washington, a court of competent jurisdiction, bring suit against the Merchants' National Bank of Seattle, and did cause the bank to be personally served in the county of King, in which it is located and did business; that on the 30th day of November, 1895, judgment was rendered and entered in the complainant's favor by that court in the sum of $29,716; that thereafter, and on January 15, 1896, on forms supplied from the receiver's office, and in the prescribed manner, the complainant presented his claim for the amount so adjudged to be due him from the bank, annexed to which was a duly-certified copy of the judgment, which claim the receiver rejected in these words: "I am in receipt of your favor of the 13th instant, inclosing the claim of D. B. Denton against this trust for $29,716. That claim I have to-day rejected." The bill further alleged that the receiver never at any time assigned any reason for rejecting the claim; that from August 15, 1895, to the time of the bringing of this suit the receiver had actual knowledge of the written agreement of the bank with Mackintosh, and that from some time in September, 1895, he had actual knowledge of its being assigned to the complainant, and that the judgment has been of public record since November 30, 1895, and that the receiver has had actual knowledge of it since January 15, 1896; that at no time has either the comptroller or the receiver brought against Mackintosh or the complainant any action on behalf of the bank or its creditors, or at all sought to set aside, cancel, annul, or in any wise rescind the agreement between the bank and Mackintosh, or to effect its assignment to the complainant, or to impeach, attack, vacate, modify, or in any wise alter the complainant's judgment against the bank, which still stands wholly unpaid, unreversed, unmodified, and not appealed from. The bill further alleged that the comptroller is preparing to levy assessments on the capital stock of the insolvent bank to create funds for the payment of its liabilities; that in such levy he is taking no account of the judgment recovered by the complainant against the bank, and that unless defendant, Baker, be restrained from rejecting the complainant's claim, the whole of it will be disregarded by the comptroller, and the latter will not have evidence before him on which to include this claim, and on which to make a levy sufficient to pay it; that the complainant at all the times mentioned in the bill was, and still is, one of the stockholders of the insolvent bank to the extent of 4 shares, and that his assignor, Mackintosh, was at all those times, and still is, one of its stockholders to the extent of 600 shares, and that each of them will be included in such assessment, and be called upon to pay a proportion of the indebtedness of the bank, and that it is equitable that the assessment include the claim of the complainant, to the end that the other share-

Digitized by Google

holders may be assessed their due proportion of it, and that Mackintosh be compelled, as a shareholder, with the others, to be assessed his proportion also; and that, if the claim of the complainant continue to be rejected by the receiver, irreparable damage and injury will be done the complainant, for which he has no plain, speedy, and adequate remedy at law. The prayer was that the defendant receiver be restrained from any further rejection of the complainant's claim, and that he be compelled to file and allow the same, with interest up to the date at which the Merchants' National Bank of Seattle became insolvent, and that he be compelled, as such receiver, to approve and forward to the comptroller of the currency of the United States the claim of the complainant; and for such other and further relief as the equity of the case may require.

In the case of Bank of Bethel v. Pahquioque Bank, 14 Wall. 383, 397, the supreme court said:

"Whenever a receiver [of a national bank] is appointed, the comptroller is required to give notice of the fact, requesting all persons having claims against the association to present the same, and to make legal proof thereof. Provision is first to be made by the comptroller for refunding to the United States any such deficiency in redeeming the notes of the association as is mentioned in the act, and, having refunded that amount, the comptroller is required, in the next place, to make a ratable dividend of the money paid over to him by the receiver on all such claims as may have been proved to his satisfaction, or adjudicated in a court of competent jurisdiction. Claims proved to the satisfaction of the comptroller are to be included in the list, and he is also to include in the list all claims adjudicated in a court of competent jurisdiction, which shows conclusively that claims disallowed by the comptroller may be prosecuted in a court having jurisdiction in such cases."

In that case the supreme court also held that, notwithstanding the insolvency of a national bank, and the appointment by the comptroller of a receiver of its assets, the corporate franchise of the association continues, and the association, as a legal entity, continues to exist, and is capable of suing and liable to be sued in all matters in which the corporation is interested. It is not denied that the state court of King county, Wash., where the corporation was located, and where the contract relied on by the complainant was made, was a court of competent jurisdiction for the adjudication of the rights of the parties to the contract which forms the basis of the complainant's suit, had there been no insolvency proceedings. It follows that it was a court of competent jurisdiction for the adjudication of the complainant's claim, the bank having become insolvent, and the receiver of its assets having rejected the claim. Undoubtedly, the receiver would have been entitled to have defended that suit in the name of the bank or in his own, and would have been permitted by the court, upon a seasonable application, to have contested the validity of that judgment.

In Bank v. Colby, 21 Wall. 609, one of the questions was whether the property of a national bank organized under the act of congress of June 3, 1864, attached at the suit of an individual creditor, after the bank has become insolvent, can be subjected to sale for the payment of his demand against the claim for the property by a receiver of the bank subsequently appointed; and the court said, among other things:

Digitized by Google

"It is too late for counsel to question in this court the right of the receiver to appear in the state court, and move the discharge of the attachment and the abatement of the suit, or to contest the case at the trial. Whatever informality may have existed in the proceeding, it was waived by the silence of the parties. Objections in matters of form to modes of procedure in the court below cannot be urged here for the first time. But, independently of this consideration, we are of opinion that it was a proper proceeding on the part of the receiver to apply to the court below to discharge the attachment on proof of the facts presented by him, and the production of his appointment, and the decree dissolving the association. Invested with the rights of the bank to the possession of the property by his appointment, it was his duty to take the necessary steps to remove the levy."

In Bank v. Kennedy, 17 Wall. 19, it was held that the receiver may sue in his own name or in that of the bank; and, if he may so sue, he may so defend. In the Bank of Bethel Case, above cited, while the receiver was not a party to the suit, and does not appear to have taken any part in it in the supreme court, it appears from the report of the case in the supreme court of Connecticut, from which court the case was taken to the supreme court of the United States, that the suit was there defended by the receiver, by direction of the comptroller of the currency, in the name of the defendant to the suit, for the benefit of the stockholders and creditors of the bank. National Bank of Pahquioque v. Bank of Bethel, 36 Conn. 325. But, while the receiver of an insolvent national bank may, in the interest of its creditors and stockholders, and for the protection of its assets, interpose, and become a party to a suit to enforce a claim against the bank, it does not follow that he is a necessary party to such a suit. The statute creating such banking institutions, and providing for their conduct, and for their management, and for winding them up in the event of insolvency, does not require that the suit to establish a claim before a court of competent jurisdiction shall be brought against the receiver. The provision of the statute is that:

"From time to time, after full provision has been first made for refunding to the United States any deficiency in redeeming the notes of such association, the comptroller shall make a ratable dividend of the money so paid over to him by such receiver on all such claims as may have been proved to his satisfaction or adjudicated in a court of competent jurisdiction." Rev. St. § 5236.

Under this language the supreme court, in the case of National Bank of Pahquioque v. Bank of Bethel, supra, sustained a suit against the insolvent bank, to which the receiver did not appear as a party; and in National Bank of the Commonwealth v. Mechanics' National Bank, 94 U. S. 437, 440, it was expressly held that claims against an insolvent bank, whose validity is established by a judgment in a court of competent jurisdiction, and claims that are proved to the satisfaction of the comptroller, stand upon the same footing. In that case a suit against the insolvent bank for interest accruing after the allowance of the principal sum by the receiver was sustained, although the receiver was not a party thereto. In the cases of Turner v. Bank, 26 Iowa, 562, and Green v. Bank, 7 Hun, 63, cited and relied on by the appellee, it was held that the receiver was a proper party to a suit brought in a court of competent jurisdiction to establish a claim against the insolvent bank; but in neither of those cases was it held that he is a necessary party to such a suit. Case v. Bank, 100 U. S.

Digitized by Google

446, was an action by the Citizens' Bank of Louisiana against the receiver of the Crescent City National Bank to recover damages for a refusal on the part of the latter bank, prior to its insolvency, to permit a transfer of certain shares of its capital stock. The proof showing, and the jury having found, that the Citizens' Bank was damaged by that refusal on the part of the insolvent bank in a certain sum of money, the supreme court sustained the action against the receiver of the insolvent bank, and affirmed the judgment of the lower court, directing the receiver to recognize the Citizens' Bank as a creditor for the amount in which it had been damaged, and requiring him to provide for its payment along with the other creditors of the insolvent bank.

It results, we think, from the decisions of the supreme court to which we have referred, that an action to establish the validity of a claim against an insolvent bank may be brought in a court of competent jurisdiction against both the insolvent bank and the receiver, or against the insolvent bank or the receiver; and if against the receiver either jointly with the insolvent bank or against him only, he may be directed by the judgment in the action to recognize the claim, and to provide for its payment along with the other claims against the bank; and if against the insolvent bank only, it is binding upon the receiver, unless void by reason of fraud or collusion. The case is analogous to that of a suit brought against a debtor for the recovery of a debt, after a general assignment of his property made to a trustee for the benefit of creditors. The contract between the debtor and creditor would still subsist, and could be enforced by suit against the debtor, and a judgment between the original parties on the contract would necessarily establish the existence and extent of the obligation between them, as well as against a trustee of his estate for the benefit of creditors. Pringle v. Woolworth, 90 N. Y. 502, 511. That was evidently the view taken by the supreme court of the national banking act in the case of Bank of Bethel v. Pahquioque Bank, supra, where it said: "Claims presented by creditors may be proved before the receiver, or they may be put in suit in any court of competent jurisdiction as a means of establishing their validity." 14 Wall. 401.

The validity of the complainant's claim being thus established against the bank, and the receiver continuing to reject it, the claimant is clearly entitled to some remedy to enforce his right. That he cannot resort to mandamus is conceded by the appellee. The United States courts have no jurisdiction in mandamus except where the right sought is ancillary to their other powers, or to enforce their own judgments. McIntire v. Wood, 7 Cranch, 504; Bath Co. v. Amy, 13 Wall. 244; Rosenbaum v. Bauer, 120 U. S. 450, 7 Sup. Ct. 633; Gares v. Association, 55 Fed. 209. But there is no difficulty in the way of the complainant maintaining an action at law against the receiver upon the judgment recovered by him in the state court. Hickman v. Macon Co., 42 Fed. 759; Freem. Judgm. § 432; 2 Black, Judgm. § 958, and cases there cited. The judgment in such action at law may direct the receiver to recognize the claim of the complainant, and to provide for its payment along with all other claims against

Digitized by Google

the insolvent bank. Case v. Bank, 100 U. S. 446. This affords complainant a plain, speedy, and adequate remedy, and therefore he cannot resort to equity. The judgment is affirmed.

(79 Fed. 196.)

THIRD STREET & SUBURBAN RY. CO. v. LEWIS.

(Circuit Court of Appeals, Ninth Circuit. February 8, 1897.)

MORTGAGES—PURCHASE OF MORTGAGED PREMISES BY RAILROAD COMPANY—RECEIVER'S CERTIFICATES—PRIORITIES—FORECLOSURE.

In 1884 the W. Co. mortgaged to L. certain city lots. In 1891 it sold them, subject to the mortgage, to a railway company, which proceeded to erect a power house upon them, and put them to railroad uses. Subsequently, in a suit brought against the railway company, a receiver was appointed, who operated the railroad under the orders of the court, and, to pay operating expenses, issued receiver's certificates, also under an order of the court, which made such certificates a first lien on the company's property. Upon the request of the certificate holders, the railway company's property, including the lots, was sold, and the proceeds applied to the payment of the certificates. L. was not a party to this suit, but had actual knowledge of the proceedings. During his operation of the railroad, the receiver paid taxes on the property and interest on L.'s mortgage. Before the order for the sale of the railway company's property, L. commenced a suit for the foreclosure of his mortgage. *Held*, that the lien of L.'s mortgage was not extinguished by the proceedings in the suit against the railway company, nor subordinated to the lien of the receiver's certificates, but that his right to foreclosure of his mortgage was unimpaired. Union Trust Co. v. Illinois Midland R. Co., 6 Sup. Ct. 809, 117 U. S. 434, distinguished.

Appeal from the Circuit Court of the United States for the Northern Division of the District of Washington.

Frederick Bausman, for appellant.

Morris B. Sachs, for appellee.

Before GILBERT and ROSS, Circuit Judges, and HAWLEY, District Judge.

GILBERT, Circuit Judge. The appellee was the complainant in a suit brought to foreclose a mortgage on certain real property in the city of Seattle. His supplemental bill alleged, in substance, that on May 14, 1884, the Western Mill Company, a corporation, executed its promissory note to the complainant in the sum of $20,000, payable three years after date, with interest at 9 per cent. per annum, and to secure the same executed its mortgage on certain lots in the city of Seattle; that the interest on said note and mortgage has been paid to December 14, 1893, but not thereafter; that on October 14, 1891, the mortgagor sold and conveyed the said mortgaged premises to the Ranier Power & Railway Company, a corporation, and that on or about February 13, 1895, in a cause pending in the circuit court of the United States for the district of Washington, in which A. P. Fuller was complainant and the Ranier Power & Railway Company was defendant, the master in chancery of said court executed and delivered to A. M. Brookes, Angus McIntosh,

Digitized by Google

and Frederick Bausman, who were the purchasers of said lots at a sale had to satisfy the decree rendered in said cause, a deed of sale to said mortgaged premises, and that on February 12, 1895, the said McIntosh, Brookes, and Bausman conveyed the same unto the Third Street & Suburban Railway Company; that the interest of said last-named corporation is subject to the lien of the mortgage. To this bill the Third Street & Suburban Railway Company, the appellant, made answer, alleging that the Ranier Power & Railway Company, immediately after receiving its conveyance of said lots from the mortgagor, applied the said property to railway uses, and erected thereon a power house for its railway; that on June 13, 1893, the assets of said Ranier Power & Railway Company passed into the hands of Manson F. Bacchus, receiver in the suit of Fuller against said company, mentioned in the bill; that said receiver, under the order of the court, operated the railway properties and power house, and on August 8, 1894, under the order of the court, issued receiver's certificates upon all the property of said railway company, including the lands described in the bill; that the certificates were by the court adjudged to be necessary, and essential to the continued existence of the railway company, and were made upon the petition of the receiver, showing that the operating expenses of the company exceeded its gross receipts, and that, unless money were raised by means of these certificates, the property would have to be abandoned; and that the order of court made the certificates a first lien upon all property in the receiver's hands, including the mortgaged premises; that subsequently the certificate holders petitioned the court to enforce the lien, and that thereupon, under the order of the court, all the property in the receiver's hands was sold on January 28, 1895, as alleged in the bill; that the sale was thereafter confirmed, and on February 12, 1895, the purchasers conveyed the same to the Third Street & Suburban Railway Company. The answer further alleges that the Ranier Power & Railway Company was a corporation, organized with railway powers, and owned public franchises for railway purposes; that the complainant did not seek to foreclose his mortgage at the time of the transfer of the land to said corporation, but forbore to do so for more than two years following, during which period the mortgage was overdue, but that he accepted interest on the loan from said railway company, and thereafter accepted interest from the receiver; that the receiver, before the foreclosure suit was begun, paid taxes and insurance upon the lands to the amount of $3,000; that, while the complainant was not a party to the suit in which the receiver's certificates were issued, he had knowledge of that suit and of the receivership, and accepted interest from the receiver, with knowledge of the litigation, and of all the facts alleged in the answer, and during the space of eleven months forbore to foreclose his mortgage, and permitted the receiver, with the trust funds, to protect the mortgaged property; that about three months before the issuance of the receiver's certificates he caused his appearance to be entered in said cause, for the purpose of obtaining leave to sue the receiver, but did not ask to be made a party to the cause, nor did he serve notice

Digitized by Google

of his appearance upon any of the parties; that the sale under the receiver's certificates was known to the complainant both before and after its date, but he has not sought to disturb it, or filed objection thereto. A demurrer to the amended answer was sustained by the circuit court, and, the defendant answering no further, a decree of foreclosure was thereupon entered. The order sustaining the demurrer is assigned as error on the appeal to this court.

It is contended by the appellant that by virtue of the facts set forth in its amended answer the complainant's mortgage lien has been extinguished, and that the appellant holds its property under the title acquired at the judicial sale, which was made to satisfy the receiver's certificates, free from all prior incumbrances. It is not contended that the lien of the complainant's mortgage has been adjudged to be second to that of the receiver's certificates upon a hearing had to determine the respective rights and priorities of those incumbrances, nor that the complainant has had his day in court, but it is urged that the actual knowledge which the complainant had of the proceedings of the court, the issuance of the certificates, the adjudication of their necessity and of their priority, is tantamount to legal notice or service of process upon him. To sustain this view of the law, we are referred to the decision of the supreme court in Union Trust Co. v. Illinois Midland R. Co., 117 U. S. 434, 6 Sup. Ct. 809, in which it is said: "A full opportunity, as in this case, to be heard on evidence as to the propriety of the expenditures and of making them a first-class lien, is judicially equivalent to prior notice. The receiver, and those lending money to him on certificates issued on orders made without prior notice to parties interested, take the risk of the final action of the court in regard to the loans. The court always retains control of the matter. Its records are accessible to lenders and subsequent holders, and the certificates are not negotiable instruments." This expression of opinion was uttered in the case of a foreclosure of railroad mortgages, in which the court had had occasion to advert to the nature of that class of liens, and the necessity for preserving the road as a going concern, together with its franchises, not only for the benefit of the corporators, but as a public highway, and had said that its creditors, or the holders of its obligations, must necessarily be held to have received the same in view of these peculiar facts, and with the understanding that, if the company fall into insolvency, and its affairs come into a court of equity for adjustment, it may become necessary to make repairs, or pay the costs of operation, and for that purpose to borrow money upon the credit, not only of its earnings, but of its corpus. The court held, it is true, that the certificates of receivers might, in case of urgency, where legal notice was not practicable, be issued under the order of the court for the preservation of the property and the protection of the bondholders, and that in such a case prior notice to incumbrancers or to all the parties interested was not absolutely necessary, but that the question of the priority of such receivers' certificates over the liens of persons to whom notice was not given, or who did not consent, might be subsequently adjudicated, and that the takers of such receivers'

Digitized by Google

certificates must be expected to receive the same subject to such contingency. But the facts upon which the decision was rendered in that case differ in substantial features from the present case. The complainant here did not lend his money upon railroad security. He loaned it upon lots in a city, which were subsequently sold to a street-railway company subject to his lien, and by the latter were used as the site of a power house. The fact that he failed to foreclose his mortgage immediately on such transfer, or that he received from the railway corporation, or from the receiver appointed subsequently in a suit against said corporation, the interest which came due upon his mortgage, does not in any way change his rights, or estop him to enforce his lien as an ordinary mortgage upon real estate. Assuming it to be true that he had actual notice of all the steps taken in the suit in which the receiver's certificates were issued, and that he made no appearance in said court, and no opposition to said proceedings, he is not thereby precluded from proceeding to foreclose his mortgage upon default of the interest on the same. The foreclosure suit was begun some two months before the hearing on the petition for the order to sell the real estate to satisfy the receiver's certificates. The holders of those certificates and the parties to that suit had the opportunity to cause the complainant to intervene in said proceedings, and submit to the court the question of the priority of his lien. They declined to do so. They were chargeable with the record notice of his lien from the first, and the complainant, in view of their conduct, might justly assume that it was not their intention to dispute his prior lien, or to attempt to create a lien in advance thereof, and that in selling the property as the same was sold, in a proceeding to which he was not made a defendant, it was the intention to recognize his mortgage and to sell the property subject thereto. In making the expense of operating a railroad a charge upon it in preference to the mortgage liens, courts of equity have acted with extreme caution, and have exercised the extraordinary power only upon the theory that the holder of such a mortgage lien takes the same subject to the implied condition that, in case of the insolvency of the railroad company, it may become necessary, under a receivership, to borrow money for the purpose of preserving its value and protecting its franchises for the benefit of all interested therein. The power has generally been exercised only after notice to all parties to the litigation; and if, without such notice, or if before the time when the prior lien holders become parties to the suit, receivers' certificates are issued by authority of the court, such prior lien holders, when they are subsequently brought before the court, will always be given the opportunity to contest the priority of the receivers' certificates over their liens. In Mercantile Trust Co. v. Kanawha & O. Ry. Co., 7 C. C. A. 3, 58 Fed. 6, it was held that the holder of a receiver's certificate is put upon inquiry as to all that has been done in the litigation in which the certificate was authorized, and that he is charged with notice of all subsequent proceedings therein, and of the fact that by the final action of the court the validity of the certificate may be prejudicially affected; and that a final decree in a

Digitized by Google

foreclosure suit against a railway company, vesting the purchasers at the foreclosure sale with a title free from all liens for receiver's debts, operates to set aside so much of a previous order as has made the receiver's certificates a paramount lien on the road. But the mortgagee in this case does not stand in the attitude of the ordinary lender of money upon railroad security. His loan was made upon real estate only, and not in contemplation of its subsequent application to railroad uses. Upon what principle of equity can it be said that his mortgage has become subordinated to the uses for which the property was thereafter devoted, so that it has lost its character of a mortgage upon real estate, and has now, by virtue of the insolvency of the railway company, become extinguished by a lien created by a receiver for the purpose of maintaining other property of the company? At the time when the mortgage loan was made the security presumably was, and still is, of sufficient value to satisfy the complainant's lien. For the protection of that lien, he has not, so far as the facts are disclosed in the pleadings, required the intervention of a court of equity, nor is it shown that any expense has been incurred by the receiver which was necessary or advantageous to the protection of his security.

The appellant insists that there is ground for the equitable preferment of the receiver's certificates over the complainant's lien, in the fact that the receiver, before the commencement of this foreclosure suit, paid out of the assets of said railway company, for insurance and taxes on the mortgaged property, the sum of $3,000, thereby reducing the assets of the company, and in part creating the necessity for the issuance of the certificates. We are unable to see how this contention can be sustained. If the receiver paid taxes and insurance, it was in the discharge of his duty, and in the course of business, and for the purpose of protecting the property as it was, and possibly for the purpose of averting a suit by the complainant to foreclose his mortgage. The greater portion of the sum so paid is evidently on account of the improvements placed upon the property by the railway company, and not for taxes upon the lots which were the subject of the complainant's mortgage. If the taxes had remained unpaid, they would now be an additional charge upon the real estate, and the complainant, in his decree of foreclosure, would be entitled to have that amount also paid out of the security. The mortgage contemplated this, and it is not shown that the value of the property is inadequate to meet such increased charge upon it. In any view of the facts alleged in the amended answer, they constitute no defense to the bill, and the demurrer was properly sustained. The decree will be confirmed, with costs to the appellee.

Digitized by Google

(79 Fed. 202.)

LACKAWANNA IRON & COAL CO. et al. v. FARMERS' LOAN & TRUST CO. et al.

(Circuit Court of Appeals, Fifth Circuit. February 25, 1897.)

No. 503.

RAILROADS—APPOINTMENT OF RECEIVER—DEBTS ENTITLED TO PREFERENCE.

The purchase by a railroad company, under contracts made from about sixteen months to over two years before the appointment of a receiver, of some 20,000 tons of steel rails, to replace the old and deteriorated rails with which its tracks were laid, to be paid for by its notes, due in six months, renewable for six months longer at the railroad company's option, is not a purchase of supplies in the ordinary operation of the road to keep it a going concern, so as to authorize the court appointing the receiver to give the debt a preference over the mortgage debt.

Appeal from the Circuit Court of the United States for the Eastern District of Texas.

On February 16, 1885, the Southern Development Company filed its bill of complaint in the United States circuit court for the Eastern district of Texas against the Houston & Texas Central Railway Company, in a cause known as "Cause No. 185" of the equity docket of that court. The complainant alleged that the railway company was indebted to it in the sum of about $600,000 for money loaned at various times, and prayed for the appointment of a receiver. On February 21, 1885, receivers were appointed, and they took possession of all the property of the railway company. On April 18, 1885, the Southern Development Company filed its supplemental and amended bill in cause No. 185, whereby it made N. S. Easton and James Rintoul and the Farmers' Loan & Trust Company defendants in their capacity of trustees of the various mortgages on the property of the railway company. The Southern Development Company further prayed by said supplemental and amended bill that an account be taken of the several amounts due it by said railway company, as also of all sums due to all the other creditors of said railway company who might intervene for the protection of their claims. An accounting was also asked of all amounts paid by the railway company to any of its mortgagees or bondholders, of all amounts paid for interest on bonds and of other items specified in the pleadings. The Southern Development Company prayed that the amounts which the accounting would show it to be entitled to, be declared liens on the net earnings of the railway company and upon all its property, superior in rank to the claims of the trustees and to the mortgage bonds and coupons issued under various deeds of trust executed by said railway company. On September 12, 1885, the Lackawanna Company intervened in cause No. 185, and prayed that an account be had of the sum which the railway company owed it on certain contracts to be hereinafter mentioned more fully, and that its claim be decreed to be paid out of the net revenues of the railway company, and declared to be a lien thereon superior in rank to the claim of the trustees and mortgage bonds and coupons. The bill of complaint of the Southern Development Company in cause No. 185 was, upon the demurrer of the trustees, dismissed on May 27, 1886, without prejudice to the rights of complainants to assert their rights, if any they had. The decree discharged the receivers in cause No. 185. They were ordered to turn over all the property of the railway company to other receivers, who had theretofore, in causes known as equity causes Nos. 198, 199, and 201 of the docket of said court, been appointed joint receivers of the property of the railway company, on the application of the trustees under various deeds of trust bearing on the property. The receivers in cause No. 185 delivered possession of the property to the receivers in causes Nos. 198, 199, and 201 on July 10, 1886. The three causes Nos. 198, 199, and 201 were consolidated as "Consolidated Cause No. 198." In this cause, the Lackawanna Company, on November 26, 1886, filed its intervention,

Digitized by Google

praying substantially for the same relief it had prayed for in cause No. 185. A final decree of foreclosure was rendered in cause No. 198 on May 4, 1888, and, on September 8, 1888, all the property of the railway company was sold and one George E. Downs became the purchaser of the Waco & Northwestern Division of the railway company. But his purchase was made subject to the mortgage which was subsequently foreclosed in equity cause No. 227 of the docket of said court, and subject also to the right which the court reserved to charge upon the property the payment of any amount that might be found due by reason of intervening petitions pending in cause No. 198, and which might be found to be entitled to priority over the mortgage in that cause. The mortgage foreclosed in cause No. 227 is known as the "Waco and Northwestern Division First Mortgage," and is a different mortgage from the mortgages upon which the other causes were based. It bore only on the Waco & Northwestern Division of the railway company. On November 3, 1891, the Lackawanna Company, in cause No. 227, filed its intervention, which is now before this court. It is substantially the same as the interventions it filed in causes Nos. 185 and 198. Subsequently to the final decree of May 4, 1888, to wit, on April 20, 1889, the Lackawanna Company filed its petition in cause No. 198, praying that the receivership therein should continue over the property then in the possession of the court, until its claims should have been finally decreed and paid. On this petition an order was made ordering the receiver to retain possession of the property until the further order of the court. It was also ordered that the receivership which had theretofore been ordered in cause No. 227 should be concurrent with the receivership in cause No. 198, and that the receiver should keep separate accounts of the earnings and expenses of the Waco & Northwestern Division. On October 21, 1895, Moran Bros. and Henry K. McHarg, holders of bonds secured by the mortgage or deed of trust which is the subject of cause No. 227, intervened in that cause pro interesse suo.

The intervention of the Lackawanna Company in cause No. 227, which is now before this court, alleges that on December 28, 1882, on April 26, 1883, and on October 30, 1883, under three contracts respectively bearing said dates, it agreed to furnish to the Houston & Texas Central Railway Company about 20,000 tons of steel rails at prices stated in the contracts, and that upon the delivery of each 560 tons of rails payments were to be made in cash or in notes of the railway company, payable in six months from the average date of delivery of the rails, with interest at 6 per cent., with the privilege of renewing the notes before maturity for a further term of six months, by giving new notes and paying interest for the additional six months at 6 per cent. The intervener alleges that it delivered 5,009 tons of rails under the second contract, of date April 26, 1883, for which it received the promissory notes of the railway company; and that, under the third contract, of date October 30, 1883, it delivered about 8,552 tons of rails, for which it also received promissory notes of the railway company. The balances now claimed are $6,426.51 for rails claimed to have been used on the Waco & Northwestern Division under the second contract, and $99,300.64 for rails claimed to have been used on the same division under the third contract. Intervener alleges that the rails which it furnished were employed for the useful improvements and necessary repairs of the main line of the railway company and of its Western Division; that the rails were so absolutely necessary to the railway company to replace the old iron with which its tracks were laid that it is doubtful whether the railway company could have maintained its existence without them, and that prior to the improvement of the railway by means of the rails accidents to life and limb and damage to property were so great, owing to the condition of the tracks of said company, that the name of the Houston & Texas Central Railway Company became a terror to the traveling and shipping public, and a by-word and a reproach. The intervener further alleges that by means of the rails furnished by it the railway has been kept in safe running order, the business increased, and the railway rendered more valuable to the bondholders. It is also alleged that the indebtedness was contracted in consideration of the promise of the railway company to pay the same out of its earnings, and that intervener made the contracts under the expectation and belief that its claim would be paid out of the earnings, by preference over the bondholders. The intervener further alleges: "That it is provided by the various deeds of trust securing the mortgage bonds upon the various portions of the railway

Digitized by Google

of the railway company that the trustees of such mortgages, if they acquire possession of said railway under said mortgages, shall pay any floating debt or debts of said company out of the gross earnings of the said railway; and that under and by virtue of said provision your petitioner's claims aforesaid are specially made preferred claims upon the gross earnings of said railway, and enjoy priority over all mortgages bearing upon the same, and are entitled to be paid out of the gross earnings of said railway before said earnings are applied to the payment of any incumbrances whatsoever upon the same; and that your petitioner made the loans hereinabove described relying upon the said clause in the said mortgages, and in the expectation that the said company would comply with the obligation therein recognized by itself and by its mortgage bondholders, and that it would pay your petitioner's said claim before applying any part of its gross earnings to the payment of coupons or other bonded indebtedness. That said company and its bondholders are thus not only by law, but by contract, obligated to apply current earnings to payment of current expenses, and that such claims for current expenses are specially made preferred claims upon the gross earnings of said railway over all claims of bondholders." It is also alleged that the railway company has not only failed to pay, but has used a large amount of the earnings for the payment of coupons on the bonds secured by the mortgage upon which a bill of foreclosure was filed in the cause. Intervener alleges and claims that the revenues of the railway company should be applied to the payment of the claim for rails by preference over all bondholders and coupon holders.

By proper pleadings the Farmers' Loan & Trust Company, complainant in cause No. 227, on December 7, 1891, and Moran Bros. and Henry K. McHarg, interveners, on January 13, 1896, objected to and opposed the allowance of the demand of the Lackawanna Coal & Iron Company as a preferential claim. Moran Bros. and Henry K. McHarg specially pleaded the statute of limitation of two and four years. The matter of the intervention of the Lackawanna Company was referred to a master, who reported adversely to the demand. The master's report was not excepted to. Inter alia, the master reports the following findings: On December 28, 1882, intervener entered into a written contract with the railway company to deliver to it 5,000 tons of steel rails in March, April, and May, 1883, payment to be made in cash on delivery of the rails, or in notes of the purchaser, payable at six months, with 6 per cent. annual interest. Under this contract, 5,020 tons of rails were delivered, in payment of which the railway company executed its 10 promissory notes to the intervener, payable at six months, amounting, with interest, to $206,-932.16; all of which notes were either paid at maturity or at the maturity of other notes given in renewal. On April 26, 1883, another written contract was entered into by the same parties for the delivery of 5,000 tons of rails during August, 1883, or earlier, if called for; payment to be made in cash or in notes of the purchaser payable at six months with 6 per cent. annual interest. This contract provided that the railway company should have the privilege to renew the notes before their maturity for a further term of six months, by paying the interest, 6 per cent., or adding the interest to the new notes. Under this contract, 5,009 tons of rails were delivered during June, August, and September, 1883, and 10 promissory notes, payable at six months from their dates, dated on divers days in June, August, and September, 1883, and aggregating, with interest, $201,346.64, were delivered to intervener. As these notes matured, payment of so much of the debt as was not satisfied at maturity was extended, until in process of such settlement and extension the railway company, in settlement of the balance due under the contract of April 26, 1883, delivered to intervener eight promissory notes, payable at four months from their dates, dated on divers days in September, October, and December, 1884, and aggregating $118,000. During the negotiations between intervener and the railway company, which resulted in the execution of these renewal notes, intervener demanded that the railway company should secure the renewal notes by the hypothecation of collaterals, and in response to such demand the railway company hypothecated with the intervener 170 first mortgage bonds of the Galveston, Harrisburg & San Antonio Railway Company, which, by agreement of counsel, are admitted to be worth $157,250. On October 30, 1883, the same parties entered into another written contract, similar in general terms to the other contracts, and containing the clause securing to the railway company

Digitized by Google

the privilege of renewing the notes and providing for the delivery of 10,000 tons of steel rails between February 1, and August 1, 1884. Under this contract, intervener delivered 8,552 tons of rails during February, March, April, and May, 1884. Through error, eight notes, in payment of rails supplied under this contract, dated on divers days in February and March, 1884, were made payable at 12, instead of 6, months. They were, however, accepted by intervener. Afterwards, in April and May, 1884, the railway company, in settlement of the balance due on the 8,552 tons of rails delivered under the contract of October 30, 1883, delivered to intervener nine promissory notes, payable at six months from their dates, and renewable for a like term, at the maker's option. Each of these notes was renewed for six months. The 17 notes given under this contract were dated on divers days in February, March, October, and November, 1884, and aggregate $327,175.50.

The master's report also contains the following findings: "I find that negotiable promissory notes were given petitioner by the defendant company for all rails sold under the three contracts; that all of said sales were made on a stated credit for a fixed period of time, viz. six months after the average date of each delivery, and that said defendant company had the right, under said contracts, to extend the time six months longer from the maturity of said notes; that such extensions were made for the accommodation and to suit the convenience of said defendant company, and that said extended negotiable notes remaining unpaid matured, as shown above in clauses 2 and 3, during the months of February, March, April, and May, 1885. I find that all the rails delivered under the first contract, and about one-half of the rails delivered under the second contract, were paid for by the railway company prior to the appointment of any receiver of said property; but that the remaining half under the second contract, and all rails furnished under the third contract, are not paid for. I find that the rails furnished under the second contract were furnished under a contract made a year and ten months prior to the appointment of the receiver in cause No. 185, and about three years and three months prior to the appointment of the receiver in consolidated cause No. 198, and about six years prior to the appointment of the receiver in this cause. I find that the rails furnished under the third contract were furnished under a contract made about sixteen months prior to the receivership in cause No. 185, and about two years and nine months prior to the receivership in consolidated cause No. 198, and about five years and six months prior to the appointment of the receiver in this cause. * * * I find that the debt for which the Lackawanna Company claims payment in its petition herein cannot be classed as a current debt made in the ordinary course of business, as those terms seem generally to be understood, yet it appears that at the time when the contracts hereinbefore mentioned were entered into between said Lackawanna Company and the defendant railway company the condition of the track of the defendant railway company was such that the demand for new rails upon the most worn portion of the roadway was practically imperative. For a number of years prior to December, 1882, only about 5,000 tons of new rails had been purchased. The road north from Houston for 90 miles was built in 1857, 1861, and thence northward to Denison, 1867–1872. The Western Division, leading to Austin, was constructed in part prior to 1861, and completed in 1873, and the Waco Division was completed about 1875. The condition of these roads was bad, except such portions as had been relaid with 5,000 tons of rails purchased prior to December 28, 1882. There was continual breakage of rails and wrecking of trains; the track was unsafe, and was generally so regarded, not only by 'railroad men,' but by the traveling public; the damage to merchandise, rolling stock, etc., was continuous, and the need for new rails appears to have been 'absolutely necessary as a preservation of human life, the loss of which was liable to occur at any moment.' I find that when the aforesaid contracts were made with the said Lackawanna Company both seller and buyer expected the debts to be paid from the net income of the railway; that the credit extended under said contracts was at the request of and for the accommodation of the defendant railway company, and upon its general credit. That said sales were made without any stipulation that security should be given by the defendant company for said rails, or that payment therefor should be made out of any particular fund, or in any particular way; that said sales were for an unusually large amount of rails, and the defendant was unable to pay cash

Digitized by Google

therefor, and there was no other way of obtaining said rails except upon credit; and petitioner herein, at the time of said contracts and sales, had knowledge of the mortgage of June 16, 1873, given by the defendant railway company upon the properties of its Waco & Northwestern Division to secure the first mortgage bonds, which said mortgage has been herein foreclosed. * * * I find in the mortgage given by the Houston & Texas Central Railway Company to the Farmers' Loan & Trust Company, trustee, dated June 16, 1873, being the same mortgage declared on herein, the following provisions: 'And in case the said Houston & Texas Central Railway Company shall fail to pay the principal, or any part thereof, or any installment of the interest, or any part thereof, or any of the said bonds at any time when the same shall become due and payable according to the tenor thereof, and for sixty days after having been demanded, it shall be competent for the said trustee, its successors or assigns, to enter upon the said railway, and the premises and property herein conveyed, by its attorneys and agents, and take possession of the same without let or hindrance of the said first party, and every part and parcel thereof, and the appurtenances, and appoint an agent to operate and manage the same and receive the revenue and income thereof, applying the said funds, after deducting taxes, necessary expenses, and counsel fees, to keep the same in good order and repair, and the surplus to pay the principal and interest of all the bonds which may be due and outstanding and secured hereby, pro rata, and thereafter to the payment of any contributions due to the sinking fund herein established. And upon the request of the holders of one-fifth in amount of the bonds so in default which may be at any time outstanding under this deed of trust, it shall be the duty of said second party, by its president or agent duly appointed in its behalf, to enter upon and take actual possession with or without entry or foreclosure of said railway and property herein described, and all and singular each and every part and parcel thereof, and assume its management, until the arrears of both principal and interest be paid, or the property sold as herein prescribed, receiving the rents, revenues, and income thereof, and applying them in the same manner as above stated. * * * It is, however, expressly agreed that the said party of the first part may dispose of the current net revenues and income of all the said property and railway hereby conveyed in such manner as it shall deem best, until default shall be made in the payment of the interest or principal of said bonds, or of any one or more of them, and shall have the right to sell and dispose of any of such real estate or other property as it may own or acquire, which may not be needed or required for the purposes and business of the said Waco & Northwestern Division, except in the case of the six thousand acres per mile of completed road, and which sale and conveyance of such outside property shall transfer the said property and title free from incumbrance of this mortgage or deed of trust, and to change its tracks, and make any and all alterations necessary for the benefit of the same.' I find that there is no provision in said mortgage that the trustee may, if it acquired possession of said railway under said mortgage, pay any floating debt or debts of said company out of the gross earnings of said railway."

The lower court confirmed the master's report, and dismissed the intervention. The Lackawanna Company has appealed.

E. B. Kruttschnitt, for appellant.

L. W. Campbell, for appellees Moran Bros. and Henry K. McHarg.

Before TOULMIN, MAXEY, and PARLANGE, District Judges.

PARLANGE, District Judge (after stating the facts as above). It is contended on behalf of the Lackawanna Iron & Coal Company that its claim is a preferential one, within the doctrine of Fosdick v. Schall, 99 U. S. 235, and other cases in which certain claims were accorded preference over the holders of railroad mortgage bonds. The intervener's counsel urge that the case of Burnham v. Bowen, 111 U. S. 777, 4 Sup. Ct. 675, is analogous in principle to the present case. The urgent need of the railway company for the rails sup-

Digitized by Google

plied by the intervener; the dilapidated condition of the road prior to the supplying of the rails; the danger to life, limb, and property which resulted from such condition; the increased business of the road and the augmented value of the bondholders' security,—are asserted and are pressed upon the court's attention, as considerations for declaring the intervener's claim preferential. Even if all these assertions were sustained by the findings,—and some of them do not appear to be so sustained,—the intervener's claim to a preference would, in our judgment, have to be rejected. We do not understand that the doctrine enunciated in Fosdick v. Schall, supra, was based merely or mainly upon the urgency of the need of the railway for the labor, supplies, or equipment to which a preference is accorded. Nor do we apprehend that the mere fact that the supplies, labor, or equipment furnished, may have augmented the value of the bondholders' security, gives rise to a preference. In the light of Fosdick v. Schall, supra, and the other cases in which the supreme court and other courts have followed the main case, our understanding of the doctrine is that within narrow limits, a court of equity, having in its custody a railroad which is being foreclosed by its mortgage creditors, may make preferential payments of such claims as debts due to operatives, limited amounts due to connecting roads for unpaid freight and ticket balances, and limited amounts due for supplies needed from day to day, or from month to month, in the ordinary course of the railroad's operations. The controlling principle appears to be that a railroad, having public duties to discharge, must be kept a going concern while in the hands of the court, and that to that end debts due its employés and other current debts incurred for its ordinary operations, which it is not usually practicable to pay in cash, and which are therefore payable on short terms, should be paid as they would have been paid if the court had not taken away from the corporation the control of the railroad. A cessation of the railroad's operations by failure to pay promptly the operatives or such other debts as railroads must necessarily incur for their ordinary, current operations, must be prevented. The preferential payment of debts, restricted to the narrow limits indicated, operates no impairment of the bondholders' rights, for it is made both in the interest of the property and of the public. One purpose is to preserve the property in such condition that it may be sold as a going concern, and thus may suffer no diminution of value while in the hands of the court. This is to the direct benefit of all creditors. The other purpose is to enable the railroad to continue the performance of its public duties. Of this the creditors will not be heard to complain, because they are charged with knowledge of the public obligations of their debtor.

In Finance Co. of Pennsylvania v. Charleston, C. & C. R. Co., 10 C. C. A. 323, 62 Fed. 205, the circuit court of appeals for the Fourth circuit, through Mr. Chief Justice Fuller, after stating certain debts which may be paid by preference, says: "Of course, the discretion to enter such orders should be exercised with great care." The chief justice then refers to the case of Thomas v. Car Co., 149 U. S. 95, 13 Sup. Ct. 824, as indicating the narrow limits within which a court of

Digitized by Google

equity should confine itself in making preferential payments over railroad mortgagees.

In Thomas v. Car Co., just cited, the supreme court quoted approvingly from Kneeland v. Trust Co., 136 U. S. 89, 10 Sup. Ct. 950, where it was said:

"The appointment of a receiver vests in the court no absolute control over the property, and no general authority to displace vested contract liens. Because, in a few specified and limited cases, this court has declared that unsecured claims were entitled to priority over mortgage debts, an idea seems to have obtained that a court appointing a receiver acquires power to give such preference to any general and unsecured claims. It has been assumed that a court appointing a receiver could rightfully burden the mortgaged property for the payment of any unsecured indebtedness. Indeed, we are advised that some courts have made the appointment of a receiver conditional upon the payment of all unsecured indebtedness, in preference to the mortgage liens sought to be enforced. Can anything be conceived which more thoroughly destroys the sacredness of contract obligations? One holding a mortgage debt upon a railroad has the same right to demand and expect of the court respect for his vested and contracted priority as the holder of a mortgage on a farm or lot. So, when a court appoints a receiver of railroad property, it has no right to make that receivership conditional on the payment of other than those few unsecured claims which, by the rulings of this court, have been declared to have an equitable priority. No one is bound to sell to a railroad company, or to work for it: and whoever has dealings with a company when property is mortgaged must be assumed to have dealt with it on the faith of its personal responsibility, and not in expectation of subsequently displacing the priority of the mortgage liens. It is the exception, and not the rule, that such priority of liens can be displaced."

In Thomas v. Car Co., supra, the supreme court proceeded to say:

"The case of a corporation for the manufacture and sale of cars dealing with a railroad company whose road is subject to a mortgage securing outstanding bonds is very different from that of workmen and employés, or of those who furnish, from day to day, supplies necessary for the maintenance of the railroad. Such a company must be regarded as contracting upon the responsibility of the railroad company, and not in reliance upon the interposition of a court of equity."

In Kneeland v. Trust Co., supra, it is said:

"It is the exception, and not the rule, that such priority of liens can be displaced. We emphasize this fact of the sacredness of contract liens for the reason that there seems to be growing an idea that the chancellor, in the exercise of his equitable powers, has unlimited discretion in this matter of the displacement of vested liens."

In Bound v. Railway Co., 7 C. C. A. 322, 58 Fed. 473, the circuit court of appeals for the Fourth circuit, Mr. Chief Justice Fuller sitting as a member of the court, in a case almost identical with the present case, said:

"The supreme court has recently in Thomas v. Car Co., 149 U. S. 95, 13 Sup. Ct. 824, indicated the narrow limits to which an equity court should confine itself in allowing any unsecured claim to displace vested contract liens. Wages due employés, current operating expenses, current balances of ticket and freight money arising from indispensable business relations, and similar current debts accruing within 90 days, are recognized as among the limited class of claims which, in its discretion, the court may allow to have priority. In the case cited, the supreme court held it error to allow a claim for the rental of cars necessary to operate the road for the six months prior to the receivership."

Digitized by Google

Bound v. Railway Co., supra, has been cited by the circuit court of appeals for the Fourth circuit in Finance Co. of Pennsylvania v. Charleston, C. & C. R. Co., 10 C. C. A. 326, 62 Fed. 208; by Circuit Judge Simonton in Central Trust Co. of New York v. Charlotte, C. & A. R. Co., 65 Fed. 269; and by Circuit Judge Colt in Wood v. Railroad Co., 70 Fed. 743.

It would subserve no useful purpose to cite more extensively from the numerous authorities which show the narrow and restricted limits within which, in cases such as the matter in hand, preferential payments can be made. No case has been cited, nor has any come under our observation, in which such a claim as that of the Lackawanna Company has been, on final adjudication, allowed a preference.

The case of Burnham v. Bowen, supra, relied on by the intervener's counsel, and claimed to be analogous in principle to the instant case, was based on a demand for coal used in running the locomotives. The coal was supplied to the railroad company a few months before the appointment of the receiver, and the claim was found by the supreme court to be "one of the current debts for operating expenses, made in the ordinary course of continuing business." We discover no similarity of principle between that case and the case at bar. Coal is an article of constant and uninterrupted consumption on a railroad, and its purchase at short intervals, for the purpose of running the locomotives, in quantities not exceeding the operating requirements of the road, is clearly a current expense of the road. But it is difficult to see how the purchase of 20,000 tons of rails, made under the circumstances stated in the intervener's own pleadings, can be a current debt "for operating expenses made in the ordinary course of continuing business." If the road was in the condition of dilapidation which is inferable from the intervener's averments, it might be sufficient to say, in denying the demand, that the rails were supplied, not as a matter arising in the ordinary course of the railroad's operations, but for the virtual reconstruction of the road. No authorities need be cited to establish the proposition that works of reconstruction are not entitled to preferential payment. That the necessity for the supplies does not entitle to preferential payment, unless the supplies are for current expenses in the ordinary course of operation, is forcibly shown by the case of Morgan's L. & T. R. R. & S. S. Co. v. Texas Cent. Ry. Co., 137 U. S. 171, 11 Sup. Ct. 61, in which it was substantially held that the mere fact that money was loaned to a railroad company to pay the interest on its first mortgage bonds does not entitle the lender to preference; and that, although advances of money may have enabled a railway company to maintain itself, that fact alone does not entitle the lender to priority

The contention that the intervener is entitled to preference because the rails supplied by it must have enhanced the value of the bondholders' security is clearly untenable. In Railway Co. v. Cowdrey, 11 Wall. 482, Mr. Justice Bradley, as the organ of the court, said:

"As to the point of giving priority to the last creditor for aiding to conserve the thing, all that is necessary to say is that the rule referred to has never been

Digitized by Google

introduced into our laws except in maritime cases, which stand on a particular reason."

Also, see Thompson v. Railroad Co., 132 U. S. 68, 10 Sup. Ct. 29; Jones, Corp. Bonds, § 584; Fogg v. Blair, 133 U. S. 534, 10 Sup. Ct. 338; Railroad Co. v. Hamilton, 134 U. S. 296, 10 Sup. Ct. 546.

The unusually large purchase of rails; the time within which they were to be delivered; the condition of the road; the contracts providing for notes at six months, renewable for a like term, at the maker's option; the hypothecation of securities for the payment of the claim; the knowledge which the intervener had of the mortgage; the fact that the contracts contained no promise to pay out of any particular fund; the time which elapsed between the date of the contracts and the appointment of a receiver in cause No. 185,—are circumstances which, taken together, cannot fail to convince us that the intervener relied upon the general credit of the railway company.

We see no error in the action of the circuit court in dismissing the petition of intervener, and the decree appealed from is therefore affirmed.

(79 Fed. 210.)

MORGAN'S LOUISIANA & T. R. & S. S. CO. v. FARMERS' LOAN & TRUST CO. et al.

(Circuit Court of Appeals, Fifth Circuit. February 25, 1897.)

No. 504.

RAILROAD RECEIVERSHIPS—PREFERRED CLAIMS—MONEY LOANED.

Money loaned to a railroad company on its notes at various times, ranging from about nine months to over four years before the appointment of a receiver, with the purpose and result of keeping its road in safe running order, increasing its property and business, and rendering the same more valuable to the bondholders, and maintaining its credit, is nevertheless not a debt which is entitled to a preference over the mortgage bonds, upon the appointment of a receiver. Lackawanna Iron & Coal Co. v. Farmers' Loan & Trust Co., 24 C. C. A. 487, 79 Fed. 202, followed.

Appeal from the Circuit Court of the United States for the Eastern District of Texas.

The statement in the case of Lackawanna Iron & Coal Co. v. Farmers' Loan & Trust Co. (No. 503) 24 C. C. A. 487, 79 Fed. 202, shows the nature of cause No. 185, consolidated cause No. 198, and cause No. 227 of the docket of the United States circuit court for the Eastern district of Texas.

On September 12, 1885, the Morgan's Louisiana & Texas Railroad & Steamship Company, the intervener in the present cause, filed its intervention in cause No. 185, making substantially the same claim as it makes in the present cause. On March 31, 1887, the present intervener filed its intervention in cause No. 198, claiming substantially as it prays in this cause. On April 30, 1889, the intervener filed its suit on its claim against the Houston & Texas Central Railway Company in the district court of Dallas, Tex., and obtained judgment against said railway company for $1,795,570.81, with interest at 8 per cent. from May 17, 1889, the date of the judgment. On December 16, 1891, the intervener filed its intervention in cause No. 227, which intervention is now before this court. The intervener alleges that the railway company owes it 15 promissory notes, payable on demand, amounting to $1,343,538.53, all bearing 6 per cent. interest from date, except the first note which bears 7 per cent.

Digitized by Google

from date,—which notes are alleged to have been given for loans of money. The intervener alleges:

"That the loans so made by your petitioner to the said defendant company were made at the lowest market rates of interest, and were so made to said defendant company to enable it to retire its floating debt, and to provide for the improvement, equipment, and betterment of its road, to purchase supplies, pay for labor, repairs, operating and managing expenses, and for the proper equipment and useful improvement of its railway, and for other necessary expenses, outlays, and expenditures; by reason whereof the railway of the said defendant company was kept in safe running order, its business and importance increased, and its credit kept up; and that said loans were actually used by the said defendant company for the purposes aforesaid, and that the business and importance of the defendant's railway was thereby increased, and the said railway thereby rendered more valuable to the bondholders under the various mortgages described in the bills of complaint filed in this cause, as well as to all the other creditors of said company. Petitioner further avers that said credit was extended by petitioner to said defendant, and said advances so made to it, in consideration of its promise to pay the same out of the earnings of its railway; and that said indebtedness was and is, in equity and good conscience, a charge superior in rank to the mortgage bonds and coupons issued by defendant, upon the income and property of said railway company; but that said defendant, instead of paying said indebtedness so due to your petitioner out of the earnings of its railway, has entirely failed to pay the same, or any part thereof; and the truth is, and your petitioner so charges, that said defendant has used a large amount of earnings for the payment of coupons upon its bonds based upon the several mortgages described in the bills of complaint herein, although the holders of said coupons are and were entitled to receive payment therefor, only after defendant has paid your petitioner the amounts expended in the manner and for the purposes hereinabove set forth; and that upon a just accounting between your petitioner, the defendant company, and the bondholders, it will be found, as the fact is, that the bondholders have already received large amounts of money from the railway company beyond the amounts to which such bondholders were in any wise entitled, and to the loss, detriment, damage, and injury of your petitioner, which amounts, to the extent of the indebtedness of said railway company to this petitioner, should be made good to your petitioner out of the earnings of the property now in the possession of this court, and out of the proceeds of such property, if the same should be sold by any decree thereof."

The intervener admits receiving certain bonds and other collaterals as security for its claim. The intervener also claims that the mortgage provided that, if the trustee should acquire possession of the railway under the mortgage, he should pay all floating debts out of the gross earnings. In point of fact, the mortgage contains no such provision. On February 1, 1892, the Farmers' Loan & Trust Company answered the intervention. Moran Bros. and H. K. McHarg, bondholders, who had previously intervened pro interesse suo, pleaded on January 13, 1896; the statute of limitation of two and four years, and answered. The intervention was referred to a master. The report shows that the notes range in date from December 10, 1880, the date of the first note, to May 25, 1884, the date of the last note. The notes are all payable on demand. The intervener received as security for his claim collaterals, from which it realized $842,811.73. The master further reports: "I find that during the year 1884, and for several years prior thereto, the finances of the defendant company were in an embarrassed condition. Its expenses, including fixed charges, interest, etc., exceeded its income for the year 1881, $670,839.42; 1882, $430,177.16; 1883, $570,979.25; 1884, $991,481.44; and it reasonably appears that without the advances made by petitioner, as herein recited (constituting nearly one-third of its floating debt as it existed in 1884), it would not have been able to maintain its credit, and meet its obligations. I find that by the advances so made by petitioner to said defendant railway company, the railways of said defendant company were kept in safer running order, and its property and business increased, and rendered more valuable to the bondholders under the mortgage described in the bill of complaint filed in this cause, as also to all other creditors of the defendant railway company; that said advances were so made to said defendant railway company for the purposes afore-

Digitized by Google

said, and that without them said company would not have been able to maintain its credit, and meet its obligations, and that said advances were made in consideration of the promise of the defendant railway company to pay the same." The master's report was not excepted to. The circuit court confirmed the report, and dismissed the intervention. The intervener, the Morgan's Louisiana & Texas Railroad & Steamship Company, has appealed.

E. B. Kruttschnitt for appellant.

L. W. Campbell, for appellees Moran Bros. and Henry K. McHarg.

Before TOULMIN, MAXEY, and PARLANGE, District Judges.

PARLANGE, District Judge (after stating the facts as above). This case is fully covered by the views we have expressed in the case of Lackawanna Iron & Coal Co. v. Farmers' Loan & Trust Co. (No. 503) 24 C. C. A. 487, 79 Fed. 202. We find no error in the action of the circuit court, and the decree appealed from is affirmed.

(79 Fed. 212.)

SOUTHERN DEVELOPMENT CO. et al. v. FARMERS' LOAN & TRUST CO. et al.

(Circuit Court of Appeals, Fifth Circuit. February 25, 1897.)

No. 505.

RAILROAD RECEIVERSHIPS—PREFERRED DEBTS—ADVANCES TO PAY FLOATING DEBT, ETC.

Money advanced to a railroad company at various times to pay floating debts and interest coupons, and bonds loaned it to be pledged for the price of necessary rails to be purchased, and which bonds it is unable to return, do not constitute a debt which is entitled to a preference over the mortgage bonds upon the appointment of a receiver in foreclosure proceedings. Lackawanna Iron & Coal Co. v. Farmers' Loan & Trust Co., 24 C. C. A. 487, 79 Fed. 202, followed.

Appeal from the Circuit Court of the United States for the Eastern District of Texas.

The statement in the case of Lackawanna Iron & Coal Co. v. Farmers' Loan & Trust Co. (No. 503) 24 C. C. A. 487, 79 Fed. 202, shows the nature of cause No. 185, consolidated cause No. 198, and cause No. 227 of the docket of the United States circuit court for the Eastern district of Texas. The Southern Development Company, the intervener in the present cause, was the complainant in cause No. 185, which suit was instituted on February 16, 1885. After the dismissal of that cause, without prejudice to the right of the Southern Development Company to assert its claims, if any it had, in such manner as it might be advised, the Southern Development Company, on March 31, 1887, filed its intervention in cause No. 198, substantially praying for the same relief against all the railways, moneys, revenues, and other assets of the Houston & Texas Central Railway Company as it prayed for the petition of intervention now before this court, and filed in cause No. 227, on December 16, 1891. On April 30, 1889, the Southern Development Company filed suit upon its claim against the railway company in the district court of Dallas county, Tex., and obtained judgment against said railway company for $858,113.15, with interest at 8 per cent. from the date of the judgment, May 17, 1889.

By its intervention, filed as aforesaid, in cause No. 227, the Southern Development Company claims:

Digitized by Google

"That the Houston & Texas Central Railway Company, defendant in this cause, is justly and legally indebted unto your petitioner in the full sum of $745,861.07, with interest at the rate of six per cent. per annum from November 15, 1886, until paid, for this, to wit: For moneys advanced by petitioner to said defendant company, at its request, at various times, to enable it to pay for supplies, labor, repairs, operating and managing expenses, proper equipment and useful improvement, and other necessary expenses of its railway, by which defendant's railway has been kept in safe running order, and its property and business increased, and rendered more valuable to the bondholders under the various mortgages described in the bills of complaint filed in this cause, as well as to all other creditors of said company. Petitioner further avers that said indebtedness was contracted under the circumstances following, to wit: That said advances were so made to defendant for the purposes aforesaid, and in consideration of its promise to pay the same out of the earnings of its railway; and that the said indebtedness was and is, in equity and good conscience, a charge superior in rank to all mortgage bonds and coupons issued by defendant upon the income and property of said railway company; but that said defendant, instead of paying said indebtedness so due to your petitioner out of the earnings of its railway, has entirely failed to pay the same, or any part thereof, and that the truth is, and your petitioner so charges, that said defendant has used a large amount of its earnings for the payment of coupons upon its bonds issued under the several mortgages described in the bills of complaint herein, although the holders of said coupons were only entitled to receive payment thereof after defendant had paid your petitioner the amount advanced and expended in the manner and for the purposes hereinabove set forth; and that upon a just accounting between your petitioner, the defendant company, and the bondholders, it will be found, as the fact is, that the bondholders have already received large amounts of money from the railway company beyond the amounts to which such bondholders were in any way entitled, and to the loss, detriment, damage, and injury of your petitioner, which amounts, to the extent of the indebtedness of said railway company to this petitioner, should be made good to your petitioner out of the earnings of the property now in the possession of this court, and out of the proceeds of such property, if the same should be sold by any decree thereof. Petitioner further avers that for about one-half of its said indebtedness it has received and holds as collateral security, jointly with the Morgan's Louisiana & Texas Railroad & Steamship Company, eight hundred and eighty certain bonds of the issue commonly known as the 'General Mortgage Bonds' of said defendant company, and the said indebtedness aforesaid will be entitled to a credit for such a proportionate part of the proceeds of sale of said general mortgage bonds, whenever a sale thereof is made, as will inure to your petitioner under said pledge, but that such proportionate part of said proceeds of sale will fall far short of the amount of the part of such indebtedness for which said bonds are so pledged. Petitioner further shows: That, in addition to the indebtedness hereinabove set forth, said defendant company is also indebted to your petitioner in the full sum of one hundred and seventy thousand dollars ($170,000), with interest at the rate of six per cent. per annum from November 1st, 1884, until paid, for this, viz.: That your petitioner, at the request of the defendant company, did lend to it, returnable on demand, one hundred and seventy first mortgage bonds of the Galveston, Harrisburg & San Antonio Railway Company, Western Division, to be by the defendant railway company pledged as security for a certain indebtedness due by said defendant company to the Lackawanna Iron & Coal Company, said indebtedness being for steel rails by defendant company purchased from said Lackawanna Company for the betterment and improvement of its railway aforesaid, and which were by said defendant company actually used for the purpose of such betterment and improvement of the railway of said defendant company, and not for purposes of independent construction. That said indebtedness is now past due, with interest as aforesaid, and that, unless such indebtedness is paid, the said security therefor is liable to be sold in liquidation thereof. That although your petitioner has demanded from said railway company the return of the Galveston, Harrisburg & San Antonio Railway Company's bonds so loaned to it for the purpose above stated, the said railway company has failed to return such bonds, and, as your petitioner is in-

Digitized by Google

formed and believes, in its embarrassed condition, and on account of the fact that its property is in the hands of this honorable court, is wholly unable to return the same to your petitioner. Petitioner avers that said steel rails were used, not for the purpose of independent construction, but for the purpose of betterment and repair of the railways described in the mortgages of the various issues described in the bills of complaint herein, and that said rails have been an increment to the value of the property described in said mortgages; and that your petitioner has the right to claim, and does claim, that the revenue of said railway company should be applied to the payment of said indebtedness, with interest as aforesaid, and with priority over the claims of any bondholders or coupon holders whomsoever."

The Southern Development Company also claims in its intervention that the mortgage provided that, if the trustee should acquire possession of the railway under the mortgage, he should pay all floating indebtedness of the company out of the gross earnings. In point of fact, the mortgage contains no such provision. By proper pleadings, the Farmers' Loan & Trust Company, on February 1, 1896, and Moran Bros. and Henry K. McHarg, interveners pro interesse suo, on January 13, 1896, objected to and opposed the allowance of the demand of the Southern Development Company as a preferential claim. Moran Bros. and Henry K. McHarg specially pleaded the statute of limitation of two and four years. The intervention of the Southern Development Company was referred to a master. Inter alia, he found that the advances were made on open accounts ranging from July 15, 1884, to March 23, 1885, and aggregating $754,571.59. All of the items are for money loaned. Some of the items specify the purpose for which the loan was made, such as "for the payment of interest coupons on first mortgage bonds." A number of items are stated as being for money advanced, or for paying debts, or to take up notes of the company, without further explanation. In addition to the open account, the master found that the Southern Development Company loaned to the railway company 170 bonds of the Galveston, Harrisburg & San Antonio Railroad Company, in order that the railway company might pledge the same to the Lackawanna Iron & Coal Company to obtain steel rails. By agreement of counsel these 170 bonds were valued at $157,250. The master found that the railway company gave 310 of its general mortgage bonds as security for the indebtedness and for the return of the other 170 bonds just mentioned. The master found that the 310 bonds were subsequently credited on the account at par,—i. e. for $310,000,—but that this credit was largely in excess of the market value of said bonds. From the figures reported by the master it would appear that, adding the total found due on the open account to the $157,250 due for the bonds loaned to the Lackawanna Company, and deducting the $310,000 credited for the 310 bonds pledged as security, and deducting also certain partial payments, leaves the railway company indebted to the Southern Development Company in the sum of $506,025.34. The master further found: "I find that during the year 1884, and for several years prior thereto, the finances of the defendant company were in an embarrassed condition. Its expenses, including fixed charges, interest, etc., exceeded its income for the year 1881, $670,839.42; 1882, $430,177.16; 1883, $570,979.25; 1884, $991,481.44; and it reasonably appears that, without the advances made by petitioner, as herein recited (constituting about one-sixth of its floating debt as it existed in 1884), it would not have been able to maintain its credit and meet its obligations. It appears that of the money so advanced by petitioner $327,198.97 was applied by the defendant company to the discharge of interest due upon its bonds. * * * I find that by the advances so made by petitioner to said defendant railway company, the railways of said defendant company were kept in safer running order, and its property and business increased, and rendered more valuable to the bondholders under the mortgage described in the bill of complaint filed in this case, as also to all other creditors of the defendant railway company; that said advances were so made to said defendant railway company for the purposes aforesaid, and without them said company would not have been able to maintain its credit, and meet its obligations; and that said advances were made in consideration of the promise of the defendant railway company to pay the same." The master's report was not excepted to. The lower court confirmed the report, and dismissed the intervention. The Southern Development Company appealed.

Digitized by Google

E. B. Kruttschnitt, for appellant.
L. W. Campbell, for appellees Moran Bros. and Henry K. McHarg.

Before TOULMIN, MAXEY, and PARLANGE, District Judges.

PARLANGE, District Judge (after stating the facts as above). The views expressed by us in the case of Lackawanna Iron & Coal Co. v. Farmers' Loan & Trust Co. (No. 503) 24 C. C. A. 487, 79 Fed. 202, apply to this case, and are decisive of the issues here presented. The case of Morgan's L. & T. R. & S. S. Co. v. Texas Cent. Ry. Co., 137 U. S. 171, 11 Sup. Ct. 61, is in point. We see no error in the action of the circuit court in dismissing the petition of the intervener, and the decree appealed from is therefore affirmed.

(79 Fed. 215.)

DOWNS v. FARMERS' LOAN & TRUST CO. et al.

(Circuit Court of Appeals, Fifth Circuit. February 25, 1897.)

No. 502.

RAILROAD MORTGAGES—FORECLOSURE—RIGHTS OF PURCHASER—NET EARNINGS OF RECEIVERSHIP.

On the foreclosure sale of a railroad, then in possession of a receiver, one division of the road was sold subject to a prior mortgage, which expressly secured to the bondholders the net income of the property after default in interest. While the road was still in possession of the receiver, a suit was brought to foreclose this senior mortgage, and the existing receiver was also appointed as receiver in that suit, and continued in possession until the sale, some years later, under the senior mortgage. *Held*, that the purchaser at the first sale was not entitled to the net earnings of the division covered by the senior mortgage, which had accumulated in the hands of the receiver, after his appointment in the second suit, but the same belonged to the bondholders under the terms of the mortgage.

Appeal from the Circuit Court of the United States for the Eastern District of Texas.

Prior to May 27, 1886, separate bills were filed in the circuit court to foreclose certain mortgages executed by the Houston & Texas Central Railway Company, and for the appointment of a receiver. The mortgages sought to be foreclosed in these suits covered the main line of the Houston & Texas Central Railway, the Western Division, and the Waco & Northwestern Division of said railway. On May 27, 1886, the suits above mentioned were consolidated, and thereafter proceeded as consolidated cause No. 138, in which Nelson S. Easton and James Rintoul, trustees, and the Farmers' Loan & Trust Company, trustee, were complainants, and the Houston & Texas Central Railway Company and others were defendants. Of all the property of the Houston & Texas Central Railway Company receivers were duly appointed, who took possession and operated the railway under orders of the court. In the consolidated cause, cross bills were filed for the foreclosure of the Main Line and Western Division consolidated mortgage, the Waco & Northwestern Division consolidated mortgage, and the income and indemnity mortgage. A decree of foreclosure and sale was entered by the court May 4, 1888. In pursuance of the decree the entire property of the Houston & Texas Central Railway Company was sold by the master commissioner September 8, 1888. At such sale all the property included in the Waco & Northwestern Division first mortgage, which was executed June 16, 1873, by the Houston & Texas Cen-

Digitized by Google

tral Railway Company to the Farmers' Loan & Trust Company, was sold to George E. Downs, the appellant, for the sum of $25,000 in cash. The decree of foreclosure in consolidated cause No. 198 provided that the sale of the Waco & Northwestern Division of the railway should be made in all things subject to the prior lien and mortgage executed on said division by the Houston & Texas Central Railway Company on the date last aforesaid. Thereafter, to wit, December 4, 1888, the sale was confirmed, and a deed executed by the commissioner to Downs, January 18, 1889, in which it was expressly stated that the purchase by Downs was made in all things subject to the first mortgage of appellee the Farmers' Loan & Trust Company. On April 6, 1889, the appellee the Farmers' Loan & Trust Company, trustee for the bondholders, filed its bill in this suit in the circuit court (equity cause No. 227) against the Houston & Texas Central Railway Company and Charles Dillingham, the sole receiver then operating the railway, to foreclose the first mortgage of June 16, 1873, on the Waco & Northwestern Division, and for the appointment of a receiver. Agreeably to the prayer of the bill, a receiver was appointed on the same day, to wit, April 6, 1889, by an order which, among other things, provided as follows: "Whereupon, and on consideration whereof, the court consenting that said Charles Dillingham, as receiver of the Houston & Texas Central Company, be a party defendant herein, it is ordered, adjudged, and decreed by the court that Charles Dillingham, who is already in possession of the Houston & Texas Central lines of railway as receiver under orders of this court, be, and he is hereby, appointed receiver, under the prayer of the bill so filed for the foreclosure of the said Waco & Northwestern Division first mortgage, of all the railway and property which is covered by said mortgage, with power to manage and operate the same, and prosecute and defend all suits connected therewith, and generally to discharge all the duties of receiver respecting such railway property, and that he be appointed such receiver without giving further bond than that which he has already filed in the consolidated cause." An amended bill was filed December 3, 1889, making the appellant a party defendant, and an order of dismissal was entered as to the Houston & Texas Central Railway Company, December 26, 1890.

The original bill filed by the Farmers' Loan & Trust Company in this suit alleged that the mortgage sought to be foreclosed was made to secure the payment of 1,140 bonds of the denomination of $1,000 each, and that certain interest coupons were past due and unpaid; that the appellant, Downs, had purchased the property included in its mortgage at the sale made by the master commissioner under the order of the court passed in consolidated cause No. 198, subject in all things to the lien of said mortgage. It was further alleged "that holders of bonds to the extent of $356,000 of principal now desire your orator, as trustee, to proceed under those clauses of said mortgage which provide for your orator, as trustee, taking possession of the mortgaged premises and operating the same; that holders of bonds to the amount of $234,000 of principal are opposed to that course, desiring the foreclosure of said mortgage; that holders of $300,000 of said bonds (being unknown to your orator) have expressed no opinion on the subject whatever, and that the holder of $250,000 of said bonds, having at one time joined in the first request, has expressed her wish to withdraw therefrom." The bill prayed an accounting, a sale of the property embraced in the mortgage, and, as affecting the questions here involved, contained the following prayer: "That out of the proceeds of said sale or the net earnings of said property there may be paid, first, the costs and expenses of your orator in this suit, and all its expenses of every sort and description involved in the execution of its trust, including proper attorneys' and counsel fees, with a proper compensation to your orator for its own services as trustee, to be allowed by the court, and that the residue thereof may be applied to the payment of the amount due upon the said first mortgage bonds and the coupons thereto, with interest thereon; that, if there be any surplus, it may be applied in such way as this court may direct; and that the defendants in this suit may be barred of and from any equity of redemption of, to, and in the said property and franchises; and that any deficiency on such sale may be entered in this cause as a judgment against the Houston & Texas Central Railway Company." A final decree was rendered March 16, 1892, foreclosing the mortgage, and ordering a sale of the property. By the terms of the decree the rights of all interveners were reserved for future ad-

Digitized by Google

judication, and were to be in no manner affected or prejudiced by the decree. And it was further provided that the disposition of surplus funds in the hands of the receiver, and arising from the earnings of the road or otherwise, should be reserved for future determination. The railway and other property described in the decree were sold, conformably to the order of the court, December 28, 1892, and upon confirmation of the sale by the court a deed was tendered to the purchaser. This deed the purchaser declined to accept, and a controversy resulted between him, the appellee the Farmers' Loan & Trust Company, and one of the bondholders, which eventually culminated, March 5, 1895, in an amendatory final decree setting aside the sale, relieving the purchaser from his bid, and ordering a resale of the property. The decree of March 5, 1895, contains the following reservation as to the surplus funds and the right of appellant to claim the net earnings of the property: "It is further ordered, adjudged, and decreed that * * * the right of said George E. Downs to a hearing on his claim to the earnings of the property since his purchase be, and they are hereby, reserved to be hereafter adjudicated, and are in no manner affected or prejudiced by this decree. It is further ordered that the disposition of any surplus funds, arising from the earnings of the road or otherwise, that may be in the hands of the receiver, or to the credit of this cause, be reserved for future determination." The decree directed the fund to arise from the sale to be applied as follows: "(1) To the payment of costs, etc. (2) To the payment of matured and unpaid coupons appertaining to the bonds issued under said mortgage, and interest thereon to the date of payment thereof, and any accrued but unpaid interest on account of coupons not then matured; or, if the funds be not sufficient to pay the same, then the said coupons, with the interest thereon, and such accrued interest, shall be paid pro rata. (3) To the payment of the principal of said bonds, or, if the funds be not sufficient to pay the same in full, then the principal of said bonds shall be paid pro rata." Pursuant to the directions of this decree, the property was resold by the master commissioner September 3, 1895.

The appellant, having been made a party defendant to the suit December 3, 1889, answered the bill February 2, 1891. On March 15, 1892, a motion, made by the appellant to vacate the order of April 6, 1889, for the appointment of a receiver, was heard and overruled by the court. A petition was filed by the appellant in the cause, October 22, 1895, in which he asserted ownership of the net earnings derived from the operation of the railway for the period intermediate his purchase of the property, September 8, 1888, pursuant to the order of sale entered in consolidated cause No. 198, and the sale of the railway made September 3, 1895, as directed by the final decree in this suit. Moran Bros. and others, who had previously intervened in the cause, and the Farmers' Loan & Trust Company, filed their objections to the petition of appellant, all of which were, by order of the court, referred to a master for examination. The master made his report thereon January 6, 1896, to which no exceptions were taken, and an order was entered confirming the report, denying the right of appellant to the earnings of the railway, and dismissing his petition. From this order Downs appeals, and assigns error.

Wm. Grant, for appellant.

L. W. Campbell, for appellees Moran Bros. and Henry K. McHarg.

Before TOULMIN, MAXEY, and PARLANGE, District Judges.

MAXEY, District Judge, after stating the case, delivered the opinion of the court.

The appellant was made a party defendant to the suit in the court below December 3, 1889. On March 15, 1892, it appears that the circuit court overruled a motion made by him to vacate the receivership, from which no appeal was taken; nor did he appeal from the final decree of the court, passed March 8, 1895. His petition, in which he claimed the right to the net earnings of the railway as purchaser of the property, was filed October 22, 1895, and it was to the

Digitized by Google

order made thereon January 6, 1896, that he objected, and from which he appealed. It is clear, therefore, that he is not in a position to assail here the action of the court in the appointment of a receiver, and it is deemed altogether useless to cite authorities in justification of the order made by the court. The bill filed by the appellee the Farmers' Loan & Trust Company made out a plain case of equitable cognizance, and one in which the court was authorized to take possession of the property for the security of the creditors of the railway company and the protection of its stockholders.

The only question, then, which properly arises upon the specifications of error is whether the appellant, by virtue of his purchase of the Waco & Northwestern Division of the Houston & Texas Central Railway, September 8, 1888, is entitled to the net earnings resulting from the operation of the railway by the receiver from the date of his purchase to the final sale of the property, September 3, 1895. As to the period embraced between the date of appellant's purchase and the filing of the bill in this suit, April 6, 1889, the report of the master, which was not excepted to, shows that no net earnings accrued from the operation of the Waco & Northwestern Division. Hence the claim to net earnings for that period has been properly abandoned. The master further reports that a considerable amount of net earnings was derived from the operation of said division between April 6, 1889, and September 3, 1895, and, at the date of the report there remained of net income in the hands of the receiver, or in the registry of the court, the sum of $362,855.37. To the income thus accruing between April 6, 1889, and September 3, 1895, the appellant asserts a right superior to that claimed by the appellees, who are in part the owners, and partly the representatives of the owners, of the first mortgage bonds, secured by the mortgage which was foreclosed in this suit.

It is conceded that the net earnings, superadded to the proceeds of the sale of the Waco & Northwestern Division, are not sufficient to discharge the principal of the bonds and accrued interest. The record discloses that for several years prior to the filing of the bill in this suit the property was in the hands of a receiver duly appointed by the court in other causes then pending, which embraced the entire property of the Houston & Texas Central Railway Company. Upon the day that the bill was filed, an order was made, pursuant to its prayer, appointing a receiver in the suit, who continued in possession as receiver of the Waco & Northwestern Division, and such receivership went on until the property was finally sold. It is thus seen that the Waco & Northwestern Division of the Houston & Texas Central Railway was in the sole and exclusive possession of receivers, duly appointed by the court in foreclosure proceedings, throughout the entire period for which net earnings are claimed by the appellant. Neither the appellant nor the railway company was in possession of the property a single day during the period mentioned, nor did either have aught to do with the management and operation of the railway. Therefore the Texas cases cited by counsel for the appellant as to the rights of a mortgagor in possession under an ordinary trust deed, or his right under such a deed to de-

Digitized by Google

mand the premises from a mortgagee who has unlawfully acquired possession (Silliman v. Gammage, 55 Tex. 369, Loving v. Milliken, 59 Tex. 427, Edrington v. Newland, 57 Tex. 633, and others of similar type), are without application to the facts of this case. The mortgage which was executed by the Houston & Texas Central Railway Company to the appellee the Farmers' Loan & Trust Company, as trustee, expressly authorized the trustee, upon the failure of the railway company to pay any part of the interest or principal of the bonds when the same should become due and payable, and for 60 days after having been demanded, to take possession of the railway, operate and manage the same, and receive the revenue and income thereof, and apply the surplus to the payment of the interest and principal of all the matured outstanding bonds. And the trustee was further empowered, upon the request of the holders of one-fifth in amount of the outstanding bonds, in case of default in the payment of any part of the interest due on the bonds, "to enter upon and take actual possession, with or without entry or foreclosure, of said railway and property herein described, and all and singular each and every part and parcel thereof, and assume its management, until the arrears of both principal and interest be paid, or the property sold as herein prescribed, receiving the rents, revenues, and income thereof, and applying them in the same manner as above stated." And by the following clause of the mortgage the discretionary right of the railway company to appropriate the income of the property was restricted to the time when default should be made in the payment of the interest or principal of the bonds: "It is, however, expressly agreed that the said party of the first part [referring to the railway company] may dispose of the current net revenues and income of all the said property and railway hereby conveyed, in such manner as it shall deem best, until default shall be made in the payment of the interest or principal of said bonds, or of any one or more of them." The railway company having defaulted in the payment of the interest, the trustee resorted to the courts for the more effectual protection of the rights of the beneficiaries under the mortgage, and upon its application the property was withdrawn from the possession of the railway company, and placed under the control of the court.

In view of the provisions of the mortgage and the uninterrupted possession of the railway by the receiver from the filing of the bill to its final sale, we confess our inability to understand how the appellant can justly assert a claim to the net income accruing during the receiver's control and management of the property. Surely, the railway company itself could not have preferred such claim, because, having made default in the payment of interest, it was debarred by the very terms of its contract. The appellant, in that respect, has no right superior to that of the railway company. He purchased the property subject "in all things" to the lien of appellees' mortgage, which secured to the bondholders, as we have seen, the net income of the property, upon default by the railway company in the payment of interest. We have, then, before us a case where the contingency contemplated by the parties has occurred which author-

Digitized by Google

ized the trustee of the bondholders to act. A receivership was the result of such action, and we are clearly of opinion that the net income derived from the operation of the railway by the receiver should be appropriated to the payment of the debt, principal and interest, for the security of which the mortgage was executed. The rule announced is consistent with reason, and finds support in judicial decisions. It must be borne in mind that we are here treating of net income; the question of preferential claims arising out of expenses incurred, equipment supplied, betterments made, and other kindred demands, not being involved. The issue is solely between the bondholders and one who purchased the property under a junior mortgage, subject to their rights. The circumstances which determine the respective rights of the mortgagor and mortgagee to the earnings of the property mortgaged are stated by the supreme court in several cases. Thus, in Dow v. Railroad Co., 124 U. S. 654, 8 Sup. Ct. 674, says the court:

"It is well settled that the mortgagor of a railroad, even though the mortgage covers income, cannot be required to account to the mortgagee for earnings, while the property remains in his possession, until a demand has been made on him therefor, or for a surrender of the possession under the provisions of the mortgage."

In concluding the opinion, at page 656, 124 U. S., and at page 675, 8 Sup. Ct., it is further said:

"Under these circumstances, as there are no current expense creditors claiming the fund, we are satisfied that the money is to be treated as income covered by the mortgages, and should be paid to the trustees, to be held as part of that security."

See Sage v. Railroad Co., 125 U. S. 361, 8 Sup. Ct. 887, and authorities there cited.

It is said by Mr. Justice Woods, speaking for the court in Teal v. Walker, that:

"The American cases sustain the rule that so long as the mortgagor is allowed to remain in possession, he is entitled to receive and apply to his own use the income and profits of the mortgaged estate; and, although the mortgagee may have the right to take possession upon condition broken, if he does not exercise the right, he cannot claim the rents; if he wishes to receive the rents, he must take means to obtain the possession." 111 U. S. 249, 250, 4 Sup. Ct. 424.

And at pages 250, 251, 111 U. S., and at page 425, 4 Sup. Ct., it is further said:

"Chancellor Kent states the modern doctrine in the following language: 'The mortgagor has a right to lease, sell, and in every respect to deal with the mortgaged premises as owner so long as he is permitted to remain in possession, and so long as it is understood and held that every person taking under him takes subject to all the rights of the mortgagee, unimpaired and unaffected. Nor is he liable for rents, and the mortgagee must recover the possession by regular entry by suit before he can treat the mortgagor, or the person holding under him, as a trespasser.' 4 Kent, Comm. 157. See, also, Bridge Co. v. Heidelbach, 94 U. S. 798; Clarke v. Curtis, 1 Grat. 289; Bank v. Arnold, 5 Paige, 38; Hunter v. Hays, 7 Biss. 362, Fed. Cas. No. 6,906; Souter v. Railroad, Woolw. 80, 85, Fed. Cas. No. 13,180; Foster v. Rhodes, 10 N. B. R. 523, Fed. Cas. No. 4,981. The authorities cited show that, as the defendant in error took no effective steps to gain possession of the mortgaged premises, he is not entitled to the rents and profits while they were occupied by the owner of the equity of redemption."

Digitized by Google

The same rule obtains in the jurisprudence of Texas, as the following extract from Giles v. Stanton, will disclose:

"The mortgagees under this mortgage," says the court, "had no lien upon the earnings of the road while it remained in the hands of the company. * * * The lien of the mortgage upon the earnings of the railway depended solely upon the terms of the mortgage, and until the trustee took some steps authorized by the mortgage to appropriate the earnings no lien attached to the earnings. * * * By the terms of the mortgage the company was to remain in possession of the road, and had the right to operate the same, and to appropriate the earnings and income. Upon default in the payment of interest continuing for six months, the trustee was empowered to take possession of the railway, and operate it, applying the net earnings to the satisfaction of the interest, or he might sue to foreclose the mortgage; and if such default continued for twelve months, the trustee was authorized to sue to foreclose the mortgage. The trustee did not demand nor take possession of the road, and took no steps towards foreclosing the mortgage until the 18th day of June, 1891, when the plea of intervention was filed. It follows that the lien of the mortgage did not attach to the earnings of the road in the hands of the receiver which were earned before the date of the filing of the intervention; but from that time the lien of the mortgage attached to such earnings, subject to the expenditures and claims which by law were given a preference over it." 86 Tex. 627, 26 S. W. 618.

The lien of the mortgage attached to the earnings certainly from the date of filing the bill and appointing the receiver in this suit, and the net earnings subsequently acquired are properly attributable to the payment of the principal and interest of the mortgage debt. Such was the ruling of the circuit court, and in it there was no error. The decree appealed from should be affirmed, and it is so ordered.

(79 Fed. 222.)

FARMERS' LOAN & TRUST CO. et al. v. GREEN et al.

GREEN et al. v. FARMERS' LOAN & TRUST CO. et al.

(Circuit Court of Appeals, Fifth Circuit. February 25, 1897.)

Nos. 500 and 501.

RAILROAD MORTGAGE FORECLOSURE—ALLOWANCE FOR ATTORNEY'S FEES AND EXPENSES—PURCHASER RESISTING CONFIRMATION OF SALE.

A purchaser of a railroad at foreclosure sale, who resists the confirmation of the sale, and ultimately procures the setting aside of a decree of confirmation, and a release from his bid, is not entitled to be paid, out of the trust fund, his attorney's fees and expenses incurred in that behalf, but can only receive the ordinary taxable costs; and it is immaterial that the services of his counsel may have incidentally benefited the fund.

Appeal from the Circuit Court of the United States for the Eastern District of Texas.

The Farmers' Loan & Trust Company, as trustee under the first mortgage bonds on what was known as the "Waco & Northwestern Division of the Houston & Texas Central Railway," filed its bill of complaint against the Houston & Texas Central Railway Company et al., seeking a foreclosure on said Waco & Northwestern Division. On March 16, 1892, the court entered a final decree ordering a sale of the trust property. On December 28, 1892, the property was offered for sale by a special master, and E. H. R. Green, appellant in cause No. 501 and appellee in cause No. 500, being the highest bidder

Digitized by Google

therefor, became the purchaser of the property, and deposited with the master the sum of $25,000, as required by the terms of the sale. On January 11, 1893, the master filed his report of the sale, stating that the bid of E. H. R. Green for $1,375,000 was the highest made at the offering, and that the property had been struck off to him. On January 18, 1893, Collis P. Huntington filed a petition of intervention, alleging that he was a holder of a majority of the first mortgage bonds of the said Waco & Northwestern Division, and praying that he be permitted to intervene pro interesse suo, and to become a party to the cause, which petition was granted by the court. On February 3, 1893, said Huntington filed qualified or conditional exceptions to the master's report of sale, alleging therein that in the notice of sale by said master reference was made to the foreclosure decree "and the schedules on file with the clerk of said court, at Galveston, Texas, subject to the inspection of all intending bidders at such sale," for further details of the properties to be sold; that on October 28, 1892, the receiver, Dillingham, had filed in the court a schedule of property, which contained the following vague reference to certain land notes: "The receiver has in hand land notes, secured by deed of trust on lands conveyed, of the face value of ninety-six thousand three hundred and thirteen dollars and eighty-seven cents ($96,313.87)"; that neither the decree of foreclosure rendered on March 16, 1892, nor any other order or decree of the court, authorized the sale of said land notes; that the master had filed in the court his report of said sale at Waco, Tex., on December 28, 1892, and had made mention therein of said notice of sale, and of the reference to the receiver's schedule on file with the clerk of the court; and he excepted to said master's report, and to the confirmation of said sale, if and so far as the references in said notice and report may be construed as including said land notes in the properties to be sold at said foreclosure sale. On February 22, 1893, the complainant moved the court to confirm the sale of December 28, 1892, and to direct that proper conveyances be made to the purchaser. On March 14, 1893, the purchaser, Green, filed his first pleading in court, and alleged that his bid at the sale was based upon the schedule of property of said railroad referred to in the notice of the master's sale; that among other items set out in said schedule was that about $95,000 in vendor's lien notes were in the hands of the receiver, being a part of the property of said railroad ordered by the court to be sold; that upon the strength of said items in said schedule (the decree but vaguely and generally describing the property ordered to be sold), to which he was referred by the master's notice of said sale, the bid made by him was based in good faith; and that C. P. Huntington had filed in the court exceptions to the passage of said notes under the sale. Wherefore he prayed the court "that in the event such exceptions of said Huntington be sustained, that he be relieved from his bid as made, and the deposit made by him in this matter be returned to him, and that said property be resold under such directions as by the court may be proper." Depositions were taken at the hearing on March 14, 1893, and on that day the matter of the confirmation of the master's report of sale and of exceptions of the intervener, Collis P. Huntington, and of the petition of the purchaser, E. H. R. Green, for relief from his bid, came on to be heard. It was found by the court that the land notes referred to did not pass at the master's sale, and it was ordered, adjudged, and decreed that the sale be confirmed, excluding the land notes, and that the special master make a deed to the purchaser in accordance with the final decree rendered in the cause on the purchaser's compliance with the terms of the sale; and it was further ordered, adjudged, and decreed that the application of the purchaser, E. H. R. Green, for relief from his bid, be denied. On April 1, 1893, the term of the court at which the said decree of confirmation was rendered adjourned sine die. On April 13, 1893, said Green filed a petition for a rehearing of all the matters embraced in the decree of March 14, 1893, and prayed that said decree be set aside, and that he be released from his bid. There were several grounds stated in the petition for the relief prayed for, the most material of which was that there was a deficiency in the property sold, in that in the notice there were offered for sale about 277,230 acres of land, while the actual amount sold was found to be 222,459¾ acres. On June 10 and 15, 1893, respectively, exceptions and answers were filed by the complainant and by the intervener, Huntington, to said petition, and on June 27, 1893, the matter of said petition came on to be heard, and a decree was rendered by

Digitized by Google

the court denying the same. On November 6 and December 16, 1893, respectively, motions were filed by said intervener and the complainant to require said Green to comply with his bid, and complete his purchase, and, in default thereof, that the property be resold at his risk and expense. On December 9, 1893, and March 16, 1894, respectively, Green filed answers to the said motions. On March 5, 1895, the cause came on to be further heard upon the said motions and upon the answers and objections thereto of the said Green, whereupon it was adjudged and decreed by the court that the said sale of December 28, 1892, be set aside, and that the said purchaser, E. H. R. Green, be relieved from his bid, and the deposit made by him of $25,000 be returned to him, without interest, and that he go hence without day; and that the cost of the proceedings subsequent to said sale, in regard to the confirmation and enforcement thereof, so far not heretofore paid, be taken and paid out of the proceeds of the sale of the property hereinafter provided for, or funds in the hands of the receiver, as the court may hereafter order; and that the said property be resold in the manner and upon the terms described in the decree. By this decree there was reserved to said Green the right to apply to the court for an allowance to cover his expenses and counsel fees, the right to such allowance being reserved for future determination in the cause. On October 22, 1895, an application was made by Green for an allowance to cover his expenses and counsel fees. The application contained substantially the history of the proceedings in the cause. To this application demurrers were filed by the complainant the Farmers' Loan & Trust Company, and by the intervener, Collis P. Huntington. The cause coming on to be heard upon the said application and upon the demurrers thereto, the court overruled the demurrers, and held that the applicant was entitled to a reasonable fee in the premises, to be paid out of the funds in court; and the application was referred to a special master to hear proof thereon, and to report the amount for which the allowance should be made to cover such reasonable counsel fees; and also to hear proof upon and report the amount of the expenses and disbursements of the said Green. The report of the master was filed February 18, 1896, and on February 24, 1896, exceptions to the said report were filed by the complainant and Collis P. Huntington, Moran Bros., and H. K. McHarg, bond owners and interveners in the cause, and by E. H. R. Green. The substance of the exceptions taken by the complainant and interveners was that the master erred in reporting that the said Green was entitled to any allowance for counsel fees and expenses; and the substance of Green's exceptions was that sufficient allowance was not made for his expenses. On February 26, 1896, the court overruled all exceptions to the master's said report, and decreed that said Green be allowed the sum of $10,889.55, with 6 per cent. per annum interest from date until paid, together with the costs, to be paid out of any funds in the hands of the receiver in this cause. From this decree these appeals were taken.

L. W. Campbell, for appellants Moran Bros. and Henry K. McHarg.

J. P. Blair, for appellant Huntington.

Chas. W. Ogdon, for appellee Green.

E. B. Kruttschnitt, for appellees Lackawanna Iron & Coal Co., Southern Development Co., Morgan's Louisiana & T. R. & S. S. Co., and Pacific Improvement Co.

Before TOULMIN, MAXEY, and PARLANGE, District Judges.

TOULMIN, District Judge, after stating the case as above, delivered the opinion of the court.

In our view of this case, we need only to consider the question whether Green is entitled to any allowance for counsel fees and expenses to be paid out of the funds in the hands of the receiver, without regard to the question whether he was an innocent purchaser, free from laches or fault in the premises. There is no question as to the power of a court of equity, in cases of administration of funds under

Digitized by Google

its control, to make such allowance to those who have instituted proceedings for the benefit of the fund as justice and equity may require. It is a well-recognized rule of equity that when a trust fund is brought into court for administration and distribution, it must bear the expense incurred in proper proceedings taken for the purpose. This expense necessarily includes the fees of the counsel who brings the suit, and who is considered as representing all persons having a common interest in the fund brought into court by it, and who avail themselves of its benefits, and of counsel who may be employed by authority of the court to perform services beneficial to the trust fund. Trustees v. Greenough, 105 U. S. 527; Jacksonville, T. & K. W. Ry. Co. v. American Const. Co., 6 C. C. A. 249, 57 Fed. 66; Bound v. Railway Co., 59 Fed. 509; Insurance Co. v. Dellatorre, 17 C. C. A. 310, 70 Fed. 643. But this rule does not apply in favor of one who sets up an independent right to participate in the funds in litigation, and whose claim involves an antagonistic interest to that of the complainant in the suit, and those of the same class or of like interest. Insurance Co. v. Dellatorre, supra; Bound v. Railway Co., supra; Strong v. Taylor, 82 Ala. 213, 2 South. 760; Grimball v. Cruse, 70 Ala. 534; Ryckman v. Parkins, 5 Paige, 545.

The contention of the Farmers' Loan & Trust Company and others is that Green's case does not belong to that well-defined and limited class of cases in which courts of equity have allowed a successful litigant to be paid his counsel fees and expenses out of a trust fund under the control of the court; that the proceedings for the counsel fees and expenses in which Green now seeks an allowance were not brought to create or preserve any fund in which the complainant or intervening bondholders are interested, but that Green's attitude in such litigation has always and necessarily been adverse and hostile to the complainant and the bondholders. The litigation between the complainant and the interveners, the bondholders, on the one side, and Green, the purchaser, on the other, was a contest as to the right of the former to have the sale confirmed and the purchase completed, and of the latter to have the sale set aside, and to be released from his bid. Clearly, this litigation involved antagonistic interests, and the parties to it occupied adverse positions in reference to its subject-matter. A purchaser under a decretal sale is one of the parties litigant, where he resists, as he has the right to do, the confirmation of the sale. He occupies the position, respecting costs and expenses, of any other party litigant. If causes exist why the sale should be set aside, and it is for equitable reasons set aside, the party unsuccessful in the litigation should pay the costs. It will not do to invite or encourage the purchaser to resent any effort to have the sale confirmed, and to compel him to comply with his bid, upon the idea that he will incur no cost or expense in the litigation. The purchaser under a judicial sale submits himself to the jurisdiction of the court, and may be compelled to carry out his contract, but he is also entitled to the protection of the court in respect to the avoidance of the purchase if by reason of imperfections in the title or otherwise he is freed from his bid. He should be treated fairly, and, being discharged from his purchase, he is entitled to have his deposit restored to him, and to

Digitized by Google

have his costs,—the ordinary taxable costs which are chargeable as between party and party. 2 Jones, Mortg. § 1648; Morris v. Mowatt, 2 Paige, 586; Ryckman v. Parkins, supra. To direct the payment to the purchaser in this case of any allowance for counsel fees and disbursements out of the funds in the hands of the receiver would be tantamount to taxing it against the bondholders. The practical question, then, is, shall the bondholders bear the burden of the litigation arising out of this contest between the parties? Must they pay the fees of the purchaser's counsel, who were not employed or controlled by them? We see no reason why the bondholders should be required to do more than pay the legal, taxable costs, like any other unsuccessful litigant, and we know of no principle of law or of equity which authorizes the court to tax as a part of the costs the counsel fees and disbursements of the successful party in the litigation. The United States supreme court, in the case of Oelrichs v. Spain, 15 Wall. 211, after stating that the rule at law in debt, covenant, and assumpsit was against the allowance of counsel fees, held that counsel fees were not recoverable on an injunction bond, and said that:

"In equity cases, where there is no injunction bond, only the taxable costs are allowed to the complainants. The same rule is applied to the defendant, however unjust the litigation on the other side, and however large the expensa litis to which he may have been subjected. The parties, in this respect, are upon a footing of equality. When both client and counsel know that the fees are to be paid by the other party, there is danger of abuse. * * * We think the principle of disallowance rests upon a solid foundation, and that the opposite rule is forbidden by the analogies of the law and sound public policy."

Suppose the circuit court had not concluded to render the decree of March 5, 1895, releasing Green from his purchase and directing a resale of the property, but had maintained the correctness of the decree of March 14, 1893, confirming the sale and denying Green relief therefrom, could it be reasonably claimed, or even suggested, that the complainant and the interveners should recover from Green their counsel fees, and incidental expenses incurred by them, in resisting his application to be released from his purchase, and in prosecuting their motion to have him comply therewith, or that he should be taxed with such fees and expenses as a part of the costs of the contest? Clearly not, and, if not, then the parties to the litigation were not "upon a footing of equality" if Green's claim is well made.

But it was submitted in the argument of Green's counsel that the disbursements by him for counsel fees, and for other expenses incurred by him in securing a release from his purchase, resulted in curing many defects in the foreclosure proceedings, the correction of which necessarily benefited the trust property, and increased its salable value. If it be admitted that Green's counsel, in representing the interest which retained him, incidentally contributed to the benefit of the trust fund, and to the common interest of the bondholders, still he can legally claim from them no compensation for his services. They were voluntary services, as far as they were concerned. They were not rendered under any contract of employment, either expressly made by them, or superinduced by the law upon the facts of the case, and they were rendered with no view or purpose of benefiting the bondholders or the trust fund. To make such services a charge

Digitized by Google

on the trust fund they must have been rendered for the purpose of benefiting that fund. Bound v. Railway Co., supra; Grimball v. Cruse, 70 Ala. 544, 545; Trustees v. Greenough, supra. The supreme court of South Carolina, in Hand v. Railroad Co., 21 S. C. 179, in stating the rule, said:

"No one can legally claim compensation for voluntary services to another, however beneficial they may be, nor for incidental benefits and advantages to one flowing to him on account of services rendered to another by whom he may have been employed. Before a legal charge can be sustained, there must be a contract of employment, either expressly made or superinduced by the law upon the facts."

Our opinion is that the decree appealed from is erroneous in so far as it overrules the exceptions to the master's report filed by the complainant and the interveners, and decrees an allowance to E. H. R. Green for counsel fees and expenses to be paid out of the funds in the hands of the receiver. The case must accordingly be reversed, and the cause remanded, with directions to the circuit court to set aside its former decree, and, in lieu thereof, to make and enter a decree consistent with this opinion. The decree to be entered by the circuit court pursuant to the mandate of this court should order, adjudge, and decree that the exceptions of the Farmers' Loan & Trust Company and the interveners, Collis P. Huntington, Moran Bros., and Henry K. McHarg, to the report of the said special master, be sustained; that it should further order, adjudge, and decree that said Green be denied any allowance to cover counsel fees and expenses other than the ordinary taxable costs of court which are provided for in the decree from which these appeals were taken. Reversed and remanded.

(79 Fed. 227.)

FARMERS' LOAN & TRUST CO. v. NORTHERN PAC. R. CO. et al.

(Circuit Court of Appeals, Ninth Circuit. February 23, 1897.)

INSOLVENT RAILROAD COMPANIES—PREFERENTIAL CLAIMS—JUDGMENTS FOR PERSONAL INJURIES.

A judgment creditor of a railroad corporation, whose claim originated in the negligent act of the corporation's servants, is not entitled to be paid in preference to the holders of pre-existing liens upon the corporation's property.

Appeal from the Circuit Court of the United States for the Northern Division of the District of Washington.

Crowley & Grosscup and John B. Allen, for appellant.

Carr & Preston and S. H. Piles, for appellees.

Before GILBERT and ROSS, Circuit Judges, and HAWLEY, District Judge.

GILBERT, Circuit Judge. On October 1, 1889, J. B. Irvine, the petitioner, sustained a personal injury, resulting from the negligence of an engineer of the Northern Pacific Railroad. On April 17, 1893, the petitioner recovered a judgment against the railroad

Digitized by Google

company for $600 and costs on account of the injury. On October 30, 1893, the appellant, as the trustee of certain bonds of the railroad company, instituted a suit to foreclose the mortgage liens which had been placed upon the railroad property to secure said bonds. In the foreclosure suit receivers were appointed to take possession of and manage and operate the mortgaged property. On May 13, 1896, the petitioner intervened in said foreclosure suit by filing a petition, in which he alleged that he had recovered the judgment above referred to, and prayed for an order that the receiver pay his claim in full. The trust company answered the petition, alleging that the incumbrances which it sought to foreclose were existing liens upon the railroad company's property at and prior to the time when the negligent act occurred upon which the plaintiff's judgment was based, and alleging that the mortgaged property was insufficient to pay the mortgage debt. The petitioner demurred to the answer, and the court below sustained the demurrer, and made an order directing the receiver to pay the petitioner's judgment out of the funds in his hands as such receiver. The trust company appeals from this order, and contends that the funds out of which the receiver was ordered to pay the judgment were subject to the prior and superior liens of the mortgage bonds and the interest thereon. The question which is presented, therefore, is whether a creditor of a railroad corporation, whose claim originated in the negligent act of the corporation's servant, shall be paid in preference to the holders of pre-existing liens upon the corporation's property. We hold that such a judgment creditor is not entitled to be preferred to the lien holder, under the authority of Trust Co. v. Riley, 16 C. C. A. 610, 70 Fed. 32, Farmers' Loan & Trust Co. v. Northern Pac. R. Co., 74 Fed. 431, and Whiteley v. Trust Co., 22 C. C. A. 67, 76 Fed. 74. The order appealed from will be reversed, at the appellee's costs.

(79 Fed. 179.)

SEATTLE, L. S. & E. RY. CO. v. UNION TRUST CO.

(Circuit Court of Appeals, Ninth Circuit. February 8, 1897.)

1. FORECLOSURE OF MORTGAGE—PLEADING—DEFAULT IN INTEREST—PRINCIPAL DECLARED DUE.

   When a suit for the foreclosure of a mortgage has been commenced, based upon a default in interest alone, and, while the suit is pending, the trustee of the mortgage, under the provisions thereof, elects to declare the principal of the bonds secured by it due because of the nonpayment of interest, such election is properly the subject of a supplemental bill, but, if introduced into the suit by amendment to the original bill, objection must be made by demurrer, plea, or answer: otherwise it is waived.[1]

2. SUBPŒNA—AMENDED BILL—STIPULATION TO ANSWER.

   The sole office of the writ of subpœna is to bring a defendant into court, in order that the court may acquire jurisdiction of his person: and, when a defendant has appeared generally in a cause, and subsequently, upon the filing of an amended bill containing a new cause of action, stipulates by his solicitor to file an answer to the merits of such amended bill, no subpœna thereon is required.

---

[1] See note at end of case.

Digitized by Google

3. MORTGAGE FORECLOSURES—PLEADING—DEFICIENCY DECREE.
A decree for a deficiency upon the foreclosure of a mortgage, may be rendered, under the ninety-second equity rule, without a special prayer therefor in the bill, though it is the better practice to insert such a prayer.

4. SAME—STIPULATION AS TO PROPERTY COVERED.
When, in a suit for the foreclosure of a mortgage, the parties have stipulated that certain property is covered by the mortgage, no objection can afterwards be made to its inclusion in the decree of foreclosure which could have been obviated by the introduction of any proof.

Appeal from the Circuit Court of the United States for the Northern Division of the District of Washington.

Crowley & Grosscup, for appellant.
E. C. Hughes, for appellee.

Before GILBERT and ROSS, Circuit Judges, and HAWLEY, District Judge.

ROSS, Circuit Judge. This was a suit for the foreclosure of a mortgage, executed August 10, 1886, by the appellant, Seattle, Lake Shore & Eastern Railway Company, to the appellee, Union Trust Company of New York, in trust, to secure the payment of 5,675 bonds, of the denomination of $1,000 each, payable to the holder or holders thereof on the 1st day of August, 1931, with interest thereon at the rate of 6 per cent. per annum, payable semiannually. The bonds had annexed thereto interest coupons for the respective semiannual installments of interest. After the delivery of the bonds, and before the institution of the suit, 117 of the bonds were redeemed and canceled by the railway company, leaving 5,558 outstanding at the time of the commencement of the suit, in the hands of the various parties to whom they had been sold for a valuable consideration. Each of the bonds contains this provision:

"The payment of the principal and interest of this bond, with others of like tenor and same date, not exceeding, in all, twenty-five thousand dollars per mile of railroad and branches authorized by the articles of incorporation or charter of the company, is secured by a mortgage or deed of trust duly made by the said railway company to the Union Trust Company of New York, trustee for the holders of all said bonds, which shall be the first mortgage and paramount lien upon the entire of said lines of railroad and branches, constructed or to be constructed, with the appurtenances, rights, and branches, and upon all the property and rights of property of the said railroad company now held and which may be acquired."

To secure the payment of the bonds, all of which were duly authorized and executed by the railway company, the company at the same time duly executed to the trust company a mortgage upon its property, in which the property mortgaged is thus described:

"All and singular the said lines of railroads and branches of the said party of the first part now being and to be constructed in the territory of Washington, and hereafter to be constructed in the territories of Idaho, Montana, and Dakota, and extending from a point on Puget Sound at the city of Seattle, King county, Washington territory, to a point on the eastern boundary line of said last-named territory in the vicinity of Lewiston, in Idaho territory, and thence in a general easterly direction, through the territories of Idaho, Montana, and Dakota, to a point at or near Deadwood, in said Dakota territory; and also a line of railroad from a point on said above-described line east of the Cascade Mountains to the city of Spokane Falls, and thence to some point

Digitized by Google

on the eastern boundary line of said Washington territory; and also such branch railroads, from such convenient points on said above-described lines of railroad, to such points, either north or south of said lines of railroad, as said railway company may hereafter determine; and all the lands, tenements, and hereditaments acquired or appropriated, or which may or shall hereafter be acquired or appropriated, for the purpose of a right of way for said lines of railroad and branches; and all the easements, rights, liberties, franchises, privileges, immunities, and exemptions of the said party of the first part appertaining to the construction, maintaining, operating, owning, and enjoying of said lines of railroad and branches, and every part thereof; and all railroad tracks, railways, ways, and rights of way, depot grounds, bridges, viaducts, culverts, fences, and other structures, depots, station grounds, station houses, engine houses, car houses, fuel houses, ware houses, shops, machine houses, water tanks, turntables, superstructure, erections, fixtures, rolling stock, furniture, tools, implements, appendages, and appurtenances, used or intended to be used in connection with said lines of railroad and branches in any manner whatsoever; and all and singular the tenements, hereditaments, appendages, and appurtenances thereunto belonging, whether now owned or acquired, or hereafter at any time to be owned or acquired, by the said party of the first part, together with all and singular the rents, tolls, income, issues, and profits of the said lines of railroad and branches, premises and property; and also all the estate, right, title, interest, property, claim, and demand whatsoever, as well in law as in equity, and present and prospective, of the said party of the first part in and to the same and every part thereof."

The mortgage also provided that the railway company should pay into a sinking fund, created by the terms of the mortgage, annually, after August 1, 1891, an amount equal to 1 per cent. upon the aggregate of the principal of all of the company's outstanding bonds. It also contained a covenant to the effect that the railway company, whenever requested by the trust company, should execute to the trust company such further deed and assurance for the better assuring to the trustee the said lines of railroad and branches, premises, property, appurtenances, rights, privileges, immunities, and franchises mentioned, and thereby "conveyed, or meant or intended so to be, whether now owned, acquired, or held, or hereafter to be acquired or possessed by it," as the trustee or its counsel should reasonably advise or require. The mortgage also contained this covenant:

"In case default shall be made at any time in the payment of any installment of interest on any of the bonds hereby secured, the payment thereof having been duly demanded, and the coupons therefor having been duly presented at the time and place named therefor, and if any such default shall continue for the period of six months, then and in such case the principal of all said bonds shall, at the election of the trustee, become and be immediately due or payable, anything in the said bond or herein contained to the contrary notwithstanding; but a majority in interest of the holders of all said bonds then outstanding, unpaid or unredeemed, may in writing instruct the trustee in any such case to declare the said principal to be due, or to waive the right so to declare, on such terms and conditions as such majority shall deem proper, and may annul or reverse the election of the trustee; provided, that no waiver by the trustee or the bondholders shall extend to or be taken to affect any case of subsequent default, or to impair the rights resulting therefrom."

The record shows that in July, 1893, in anticipation of default in the payment of the interest upon the bonds maturing August 1, 1893, an agreement was prepared providing for the appointment of a committee of the bondholders, to consist of James D. Smith, H. O. Armour, Edward D. Christian, Morton S. Paton, and a fifth person to be chosen by them, authorizing such committee to institute and conduct

Digitized by Google

such suits and actions and take such proceedings as to it should seem advisable and proper for the protection and enforcement of the rights of the bondholders, of which committee Morton S. Paton was selected chairman. Subsequently that agreement was signed by the owners and holders of 4,672 of the bonds, being more than five-sixths of the entire issue. On the 16th day of November, 1893, Paton, as such chairman, addressed to the trustee this letter:

"Seattle, Lake Shore & Eastern Railway Company, 80 Broadway, Room 145.

"New York, November 16, 1894.

"Union Trust Company of New York, Trustee, 80 Broadway, New York, N. Y.—Gentlemen: A committee of the first mortgage bond holders of the Seattle, Lake Shore & Eastern Railway Company, composed of Messrs. H. O. Armour, E. D. Christian, J. D. Smith, and M. S. Paton, has been organized, and the undersigned has been elected chairman of said committee. The said committee have deposited, subject to their order under the terms of a certain agreement, with the Manhattan Trust Company of New York $4,410,000 of said first mortgage bonds of said railway company, being over four-fifths of the total outstanding bonds. The committee hereby, under a resolution passed the 9th day of November, 1893, requests you to proceed forthwith to the foreclosure of said mortgage for the interest past due and unpaid. The committee does not desire at the present time to declare the principal of said mortgage due, but request that the papers may be drawn on the lines as above indicated, namely unpaid interest. We further request you to demand in the bill of foreclosure above referred to the appointment of receiver to represent the interests of the bond holders and yourself as trustee.

"Very truly yours, Morton S. Paton, Chairman."

As printed in the record, the date of this letter is November 16, 1894, which date, as asserted by counsel for the appellee, and which is evident from other parts of the record, particularly the findings and decree, is incorrect; the true date of the letter being November 16, 1893. It was pursuant to that request that the original bill, after notice to the defendant railway company, was allowed by the court below to be filed, and was filed December 23, 1893. In the bill as so filed it was alleged, among other things, that the railway company made default in the payment of the semiannual interest due and payable upon the bonds secured by the mortgage, and each of them, on August 1, 1893, after demand therefor duly made. The original bill also contained the allegation "that it is essential to the preservation of the rights of your orator, and of all said bondholders, that the income yielded by said mortgaged premises be at once sequestrated and applied towards the reduction of the amounts due and to become due on said bonds." The prayer of the bill was for an accounting and ascertaining of the amount due and unpaid for interest on the outstanding bonds, and that the payment thereof be decreed; and for the ascertaining of what amount is due and payable to the sinking fund, and that payment thereof be decreed; and for the ascertaining of the amount due for taxes and other prior liens, and for allowances for costs of suit and attorney's fees, and that the payment thereof be decreed; and that, in default of such payments within a reasonable time, to be fixed by the court, the mortgaged premises be decreed to be sold, and the proceeds, after the discharge of the prior liens and costs and attorney's fees, be applied to the payment of interest due on the outstanding bonds and to the payment of the amount due to the sink-

Digitized by Google

ing fund. The prayer also asked for the appointment of a receiver of the property, which appointment the court subsequently made.

To the original bill the defendant railway company entered its general appearance July 2, 1894. On the 28th day of July, 1894, the trust company addressed and sent to the railway company this letter:

"New York, July 28, 1894.

"Seattle, Lake Shore & Eastern Railway Co., Mills Building, New York City—Gentlemen: Default having been made by you in the payment of certain coupons annexed to the bonds secured by mortgage dated August 10th, 1886, and executed by you to us as trustee, which coupons matured August 1st, 1893, and default having been made by you in the payment of the amount required to be paid on August 1st, 1893, into the sinking fund to be created pursuant to the provisions of said mortgage, we hereby elect to declare, and do now declare, the principal of all of said bonds now outstanding as due and payable.

"Yours, respectfully,

"Union Trust Company of New York, by Jas. H. Ogilvie, V. Pr."

On the 2d day of August, 1894, the complainant made a motion in the court below for leave to file an amended bill, a copy of which was on the same day served upon the solicitors for the defendant railway company. The motion was granted by the court, and an amended bill filed, which alleged, among other things, that in and by the mortgage—

"It was further provided that, in case default should be made at any time in the payment of any installment of interest on any of the bonds thereby secured, the payment thereof having been duly demanded, the coupons therefor having been duly presented at the said time and place named therefor, and if any such default should continue for a period of six months, then and in such case the principal of all of said bonds secured by said mortgage should, at the election of the said trustee, become and be immediately due and payable, anything in the said bonds or in the said mortgage contained to the contrary notwithstanding."

The amended bill also alleged that the defendant railway company had made default in the payment of the semiannual interest due and payable on the bonds, and each of them, on the 1st day of August, 1893, and on the 1st day of February, 1894, respectively, due demand therefor having been made, and the coupons therefor having been duly presented, and had also made other defaults in failing to comply with the conditions of the mortgage, by reason of which the complainant had, on or about July 20, 1894, elected to declare, and did declare, the principal of all of the bonds secured by the mortgage to be immediately due and payable. Subsequent amendments to the bill were by leave of the court filed by the complainant, and on October 2, 1894, this stipulation was entered into and filed by the respective parties, through their solicitors:

"It is hereby stipulated by and between the parties hereto that the above-named respondent shall have until Monday, the 15th day of October, 1894, to file its answer to the complainant's bill of complaint and amendments thereto filed herein, and that, in the case of a default by said respondent to file its answer on the merits on or before the time above designated, the said complainant shall take and enter the default of the said respondent herein as for want of an answer, and proceed immediately to apply to the court for the relief demanded in its bill of complaint and amendments thereto; the right to file any plea or demurrer, except an answer to the merits, being hereby expressly waived by the respondent, in consideration of the extension for leave to file such pleading."

Digitized by Google

The defendant railway company, on the 15th day of October, 1894, answered to the merits, to which answer exceptions were filed by the complainant and sustained by the court. On the 25th day of January, 1895, the defendant railway company filed an amended answer and plea, duly verified by its vice president, which plea was, on the 11th day of February, 1895, set down for argument upon the ground of its insufficiency, and which plea, after argument, was by the court overruled February 18, 1895. On the 24th day of May, 1895, leave was given the defendant railway company to file a second amended answer, which it did on the same day, and which was duly verified by the vice president of the company. To that second amended answer the complainant filed exceptions on the 24th of May, 1895, for impertinence, and the matters so excepted to were subsequently expunged by order of the court. No other amendment to the answer being made, and the cause being at issue, the same was referred, on the 14th day of June, 1895, to the master. Among the issues raised by the pleadings, and so referred to the master, was one as to the amount due upon the outstanding bonds secured by the mortgage; and the master was also directed, among other things, to ascertain and report all of the property upon which the mortgage was a lien, and to ascertain and report whether the mortgaged property could be advantageously sold in separate parcels, or whether the same should be sold as an entirety. Upon the taking of the proof before the master both parties to the suit were represented by their solicitors, and there this stipulation in writing was entered into by the respective parties:

"First. That Exhibit No. 4, hereto attached, together with schedules, marked 'A,' 'B,' 'C,' 'D,' 'E,' and 'F,' annexed to said exhibit, contains a correct description of the mortgaged premises, with the appurtenances, rights, and franchises thereunto belonging, as set forth in the bill of complaint and mortgage therein set forth; and that all the property, of every kind and description, mentioned, set forth, described, or referred to in said Exhibit No. —, and in any of the said schedules, are embraced within and covered by the lien of said mortgage above referred to.

"Second. That none of the property embraced within and covered by the lien of said mortgage, and hereinbefore referred to, can be advantageously sold in separate parcels under any decree of foreclosure that may be rendered in said cause by said court, but that the same should be sold as an entirety.

"Third. That the expenses of said complainant, trustee, in and about the execution of its said trust, aggregate the sum of sixty-seven and $^{17}/_{100}$ ($67.17) dollars, as per detailed statement this day filed with Eben Smith, Esq., master in chancery of said court, to whom this cause has been referred.

"Fourth. That the reasonable fees and compensation of Struve, Allen, Hughes & McMicken, solicitors and of counsel for said complainant and trustee, may be fixed and determined by this court upon the coming in of the report in this cause by said master, and upon the hearing of the same, and that either party, with the consent of said court, may introduce proof as to the value of such reasonable fees and compensation, and proof as to any additional services rendered after the date hereof.

"Dated at Seattle this 25th day of September, 1895."

In Schedule E, referred to in this stipulation, is embraced 2,500 shares of the capital stock of the Union Depot Company of Spokane Falls. The Union Depot Company of Spokane Falls is a corporation organized and existing under the laws of the territory (now state) of Washington, having its office and principal place of business at the

Digitized by Google

city of Spokane Falls, in that state, and was organized for the purpose, among other purposes, of acquiring, by purchase, donation, lease, or otherwise, lands in Spokane county, and to contract for the construction of, and to construct, railway passenger depots, freight depots, warehouses, roundhouses, machine shops, cattle yards, grain elevators, side tracks, and storage tracks, and any and all buildings or structures useful, necessary, or convenient for railway terminals, and to carry on and conduct the business of a railway terminal company, and to provide railway terminal facilities at or near the city of Spokane Falls, in the territory (now state) of Washington, and to charge reasonable compensation therefor, and to acquire, by purchase, lease, or otherwise, warehouses, storehouses, elevators, and other structures, and to sell, lease, or otherwise dispose of any structures or buildings owned or controlled by it. With the Seattle, Lake Shore & Eastern Railway Company and the Washington & Idaho Railroad Company, the Union Depot Company of Spokane Falls entered into, on the 14th day of October, 1889, a lease, by which the Union Depot Company undertook to construct and maintain, on lands which it had acquired and then owned, and which are specifically described in the lease, for the use in common by the two railway companies mentioned, and their successors and assigns, all necessary depots and other terminal facilities at the city of Spokane Falls, for certain considerations and upon certain terms and conditions in the lease mentioned.

On the 3d day of October, 1895, the master filed his report, to which no objections or exceptions were filed by the defendant railway company, and on the 22d day of November, 1895, the report coming on to be heard, both parties being represented by their solicitors, it was by the court in all things confirmed. The report showed, among other things, the number of outstanding bonds to be 5,558, and the amount of principal and interest due and unpaid thereon to be $6,446,980. A decree and order of sale followed for that sum, together with costs and attorney's fees, to procure the reversal of which the present appeal was brought.

In support of the appeal the counsel for the appellant make four points: (1) That the court below erred in finding and decreeing that the principal of all of the outstanding bonds became due and payable in July, 1894, by virtue of the declaration of the complainant; (2) that it erred in decreeing that the defendant railway company pay, within a certain time stated, the principal of all the outstanding bonds, as well as the interest due thereon, as a condition by which to avoid a sale of the mortgaged property; (3) that the court below erred in providing in the decree for a deficiency judgment in favor of the complainant and against the defendant railway company; (4) that it erred by including in the property decreed to be sold 2,500 shares of the capital stock of the Union Depot Company of Spokane Falls.

The assignments of error by which the appellant seeks to present these points are as follows:

"(8) The court erred in holding that complainant herein did, on the 30th day of July, 1894, elect to declare, and did declare and elect, the principal of all outstanding bonds secured by said mortgage to become immediately due and payable, pursuant to the provisions of said mortgage.

Digitized by Google

"(9) The court erred in finding, in and by said decree, that $5,558,000 was the total principal due on said outstanding bonds at the date of the rendition of the decree."

"(12) The court erred in ordering, adjudging, and decreeing herein that this defendant pay or cause to be paid to the complainant, on or before the 3d day of February, 1896, the sum of $5,558,000, together with the interest found to be due by the terms of said decree, as hereinbefore stated."

"(17) The court erred in ordering, adjudging, and decreeing herein that this defendant is personally liable for, and shall pay to the complainant, the amount of any deficiency, with interest thereon, which may remain due after the sale of the properties of this defendant under the terms of said mortgage, and the application of the proceeds thereof, pursuant to the terms of said decree."

"(23) The court particularly erred in ordering, adjudging, and decreeing that 2,500 shares of the capital stock of the Union Depot Company of Spokane Falls, Washington, and a certain leasehold estate for the period of 99 years in and to said property leased by said depot company to this defendant, in and near the city of Spokane, in the state of Washington, were covered by the terms of and included within the said mortgage, and in directing said property to be sold, along with the other properties mentioned in said decree, to satisfy the amounts by said decree found to be due upon said mortgage.

"(24) The court erred in ordering, adjudging, and decreeing that the mortgage mentioned and set forth in the bill of complaint herein should be foreclosed, and the properties described therein and covered thereby sold to satisfy the amounts of principal and interest found to be due upon the bonds secured by said mortgage according to the terms of said decree."

Passing the question of the sufficiency of these assignments, we think it clear that the appellant's points 1, 2, and 3 are not well taken. Points 1 and 2 may be considered and disposed of together. They relate to the inclusion by the court below in its decree of the principal sums of the outstanding bonds. Undoubtedly, if the principal sums were not due at the time of the trial and judgment, their inclusion would constitute such error as would make it necessary to reverse the entire decree; for, as said by the supreme court in Railroad Co. v. Fosdick, 106 U. S. 47, 71, 1 Sup. Ct. 10:

"It is obvious that the finding of the amount due, for nonpayment of which, according to the terms of the decree, the mortgaged property is ordered to be sold, is the foundation of the right of the mortgagee further to proceed, and a substantial error in that finding must, on appeal, vitiate all subsequent proceedings. Unlike a calculable error in the amount of a personal judgment, which may be cured by a remittitur, it is otherwise incurable; for, as it is an illegal exaction, made as a condition for preserving the rights of the mortgagor in his estate, and, if executed, depriving him wrongfully of them, it propagates itself through all subsequent stages of the cause."

It is true, as stated by counsel for the appellant, that by the terms of the mortgage a majority in interest of the bondholders had control of the action of the trustee respecting its election to declare the principal of the bonds due by reason of default on the part of the mortgagor; for the mortgage in terms authorized the majority in interest of the bondholders to waive the right of election, and to annul or reverse the election of the trustee when exercised. But, in saying that the committee of the bondholders, through its chairman, after the action of the trustee in declaring the principal sums of the outstanding bonds due, and before the case was at issue in the court below, annulled that action of the trustee, the counsel for the appellant make a mistake of fact. The basis of that statement by the appellant's coun-

Digitized by Google

sel is the letter from the chairman of the committee of bondholders to the complainant, appearing in the record as of date November 16, 1894, by which the trustee was requested "to proceed forthwith to the foreclosure of said mortgage for the interest past due and unpaid," and in which the trustee was informed that "the committee does not desire, at the present time, to declare the principal of said mortgage due, but request that the papers may be drawn on the lines as above indicated, namely, unpaid interest." The findings of the master, to which no objections or exceptions were taken by the appellant, as well as the findings and decree of the court, show that the original bill, which was filed December 23, 1893, was filed pursuant to that request of the committee of the bondholders. That letter, therefore, must have been written prior to December 23, 1893. Its date appearing in the record—November 16, 1894—was, therefore, evidently a mistake, the year 1894 being, as stated by counsel for the appellee, erroneously given instead of 1893. Besides, there is in that letter nothing whatever to indicate any reversal or annulment by the majority in interest of the bondholders of any action of the trustee in declaring the principal sums of the bonds due, and nothing to indicate that any such election had been made by the trustee; but, on the contrary, it plainly shows upon its face, as do the findings of the master, and the findings and decree of the court below, that that letter was the first step taken looking to the foreclosure of the mortgage in question. Nearly one year thereafter, and after the defendant railway company had entered its general appearance to the original bill, to wit, on the 28th day of July, 1894, the complainant did exercise its election, and did declare the principal sums of all the outstanding bonds due and payable because of the default on the part of the defendant railway company in the payment of the coupons annexed to the bonds maturing August 1, 1893, and of its default in the payment of the amount required to be paid August 1, 1893, into the sinking fund to be created pursuant to the provisions of the mortgage. So far as the record shows, that was the only election ever made by the trustee, and with it there was no interference on the part of the majority in interest of the bondholders at any time, so far as appears; nor does it appear that the majority in interest of the bondholders ever waived such election on the part of the trustee.

It is, however, further insisted on the part of the appellant that the election made by the complainant, after the commencement of the suit and during its pendency, declaring the principal sums of the outstanding bonds due, constituted subject-matter for a new suit, and made a new case which could not be properly brought into the original suit by amended bill, and, furthermore, that if it could, such amended bill required the issuance of another subpœna, without the issuance of which the appearance of counsel thereto for the defendant was without effect. The sole office of the writ of subpœna is to bring the defendant into court in order that the court may acquire jurisdiction over his person. "A general appearance," said the supreme court in Creighton v. Kerr, 20 Wall. 8, 12, "waives all question of the service of process. It is equivalent to a personal service." The record shows

Digitized by Google

that in this cause the defendant stipulated by its solicitor to file an answer to the amended bill upon the merits, in consideration of an extension of time given it for that purpose, and in pursuance of that stipulation did afterwards file such an answer to the amended bill, duly verified by its vice president. It thus voluntarily submitted itself to the jurisdiction of the court, which was a waiver of the service of process having for its object the bringing of the defendant into court. The new matter brought into the suit by the amended bill was the election exercised by the complainant declaring the principal sums of the outstanding bonds immediately due and payable. This was properly the subject of a supplemental bill; but, where such matter is introduced into the suit by amendment to the original bill, objection must be made by demurrer, plea, or answer; otherwise, it is waived. Fost. Fed. Prac. (2d Ed.) § 165; Brown v. Higden, 1 Atk. 291; Archbishop of York v. Stapleton, 2 Atk. 136; Wray v. Hutchinson, 2 Mylne & K. 235. In this case no such objection was taken. On the contrary, the parties stipulated in writing, whereby, in consideration of an extension of time within which to plead, the defendant railway company expressly waived the right to file any plea or demurrer, but agreed to file an answer to the merits, which it afterwards did, duly verified by its vice president.

The third point made on behalf of the appellant is answered by the ninety-second equity rule prescribed by the supreme court for the government of the courts of equity of the United States. It is as follows:

"In suits in equity for the foreclosure of mortgages in the circuit courts of the United States, or in any court of the territories having jurisdiction of the same, a decree may be rendered for any balance that may be found due to the complainant over and above the proceeds of the sale or sales, and execution may issue for the collection of the same, as is provided in the eighth rule of this court regulating the equity practice, where the decree is solely for the payment of money." Insurance Co. v. Keith, 23 C. C. A. 196, 77 Fed. 374.

By the terms of the decree appealed from, the deficiency judgment provided for is not for the benefit of the complainant, but is in favor of the complainant as trustee. The amount of such deficiency, like the amount realized by the sale of the mortgaged property, after deducting costs et cetera, is to be paid to the bondholders according to their respective interests. A special prayer for a judgment for such deficiency as may be found to exist, while proper and the better practice, is not absolutely essential. Under the prayer for general relief, which the amended bill contained, such judgment may be given. Story, Eq. Pl., §§ 40, 41; 1 Pom. Eq. Jur. 161; Tayloe v. Insurance Co., 9 How. 406; Jones v. Van Doren, 130 U. S. 684, 9 Sup. Ct. 685.

Nor did the court below err in including in its decree of sale the 2,500 shares of the capital stock of the Union Depot Company of Spokane Falls. It is true that that company was an independent corporation, organized and existing under and by virtue of the laws of the state of Washington; and that the ownership of a portion of its stock by the defendant railway company did not and could not confer upon the latter any power to mortgage the property of the depot company. Humphreys v. McKissock, 140 U. S. 304, 312, 11 Sup. Ct.

Digitized by Google

779. But, while the agreement of lease entered into between the Union Depot Company and the Seattle, Lake Shore & Eastern Railway Company and the Washington & Idaho Railroad Company, embodied in the report of the master, shows that the Union Depot was erected upon property belonging to the Union Depot Company, the complainant, but for the stipulation entered into by counsel for the respective parties, might have been able to show by proof that the Union Depot Company acquired the land upon which the Union Depot was erected from the defendant railway company, in consideration of the 2,500 shares of the capital stock of the depot company, and that at the time of such acquisition the land was subject to the complainant's mortgage. Under such circumstances, the stock representing the interest of the defendant railway company in the depot used in connection with its road might be covered by the complainant's mortgage, and, since it is possible that such proof might have been made by the complainant, the stipulation of counsel, entered into before the master, to the effect that the 2,500 shares of the capital stock of the depot company were covered by the mortgage to the complainant, must be held conclusive of the fact upon the parties.

In speaking of the binding character upon parties of stipulations between their counsel, in regard to proof, Chief Justice Shaw, in the case of Lewis v. Sumner, 13 Metc. (Mass.) 269, said:

"The importance of upholding agreements and concessions, like the present, between attorneys and counsel of litigating parties, is greater than it might seem at first blush, and is enhanced by our present practice. In most cases of controverted facts, many facts are embraced in the issue which are not really in dispute between the parties; but each must be prepared to prove all the facts necessary to his own case unless he can previously obtain a concession from the adverse party in a form which he can rely upon at the trial. It is, therefore, a wise, useful, and beneficial practice, resorted to by those who are most careful in preparing causes for trial, and a practice well deserving to be encouraged by the courts, for the parties, by their attorneys, to obtain and give mutual concessions, in writing, of all the material facts not intended to be controverted, and so narrow the litigation to the precise matters in controversy. It saves expense, avoids surprise and delay, and often prevents the loss of a good cause, by an unexpected call for proof, which could easily have been obtained if it had been anticipated that such fact would be called in question. This practice of admitting facts is the more necessary, since the disuse of special pleadings, which was designed, and to some extent had the effect, to narrow the issue on record to some one or a few questions of fact. This consideration renders it important to hold that a litigant party shall not be permitted to deny the authority of his attorney of record while he stands as such on the docket. He may revoke his attorney's authority, and give notice of it to the court and to the adverse party; but, while he so stands, the party must be bound by the acts of the attorney."

The shares of stock in the Union Depot Company being thus stipulated to be covered by the mortgage were, like all the other property covered by it, embraced by the complainant's bill. Besides, no objection was at any time made in the court below to the bill upon the ground that the allegations were not broad enough to embrace the shares of stock in question; nor was that objection made in any assignment of error. The judgment is affirmed, with costs.

Digitized by Google

NOTE.

Mortgage Foreclosures in the Federal Courts.

1. Scope of the Note.
2. Jurisdiction of Federal Courts.
3. As Affected by State Laws as to Forum and Form of Action.
4. Citizenship of Parties.
5. Suit by Assignee of Mortgage.
6. Amount in Controversy.
7. Procedure as Affected by State Laws and Practice.
8. Decree for Deficiency.
9. Redemption after Foreclosure and Sale.

1. Scope of the Note.

It is not proposed, in this annotation, to discuss the whole body of rules and principles which are applicable to the foreclosure of mortgages in all courts of equity, but only the jurisdiction of the United States courts in cases of this character, as determined by the acts of congress and affected by the laws of the several states, and the various points, in relation to their procedure and decrees, in which they are governed by, or conform to, the statutes, judicial decisions, and rules of practice of the state wherein they sit.

2. Jurisdiction of Federal Courts.

The act of congress of August 13, 1888 (correcting the enrollment of an act of March 3, 1887; 25 Stat. 433), provides that "the circuit courts of the United States shall have original cognizance, concurrent with the courts of the several states, of all suits of a civil nature, at common law or in equity, where the matter in dispute exceeds, exclusive of interest and costs, the sum or value of two thousand dollars, * * * in which there shall be a controversy between citizens of different states." Under this provision, when the amount in controversy is sufficient and the parties possess the requisite diversity of citizenship, the federal circuit courts may entertain a bill in equity for the foreclosure of a mortgage on land. Insurance Co. v. Crawford, 21 Fed. 281. Moreover, the district courts of the United States have jurisdiction in equity, by virtue of Rev. St. § 563, subd. 17, and Id. §§ 574, 631, and may take cognizance of a suit to foreclose a mortgage on land situated within their districts. Pooley v. Luco, 76 Fed. 146. This jurisdiction of the circuit and district courts is not affected by any action which may be taken in the state courts of concurrent jurisdiction, unless such action involves taking possession of the res, by a receiver or otherwise. It is well settled that the mere pendency of a prior suit, upon the same subject-matter and between the same parties, in a state court, cannot be successfully pleaded in bar or abatement of a suit in the federal court. Stanton v. Embrey, 93 U. S. 548; Gordon v. Gilfoil, 99 U. S. 168; Insurance Co. v. Brune's Assignee, 96 U. S. 588; Liggett v. Glenn, 2 C. C. A. 286, 51 Fed. 381; City of North Muskegon v. Clark, 10 C. C. A. 591, 62 Fed. 694; Sharon v. Hill, 22 Fed. 28; Marshall v. Otto, 59 Fed. 249; Pierce v. Feagans, 39 Fed. 587; Woodbury v. Railroad Co., 72 Fed. 371. And this rule applies to mortgage foreclosures. The pendency of a suit in a state court for foreclosure will not bar a suit in a court of the United States between the same parties for foreclosure of the same mortgage. Weaver v. Field, 16 Fed. 22; Beekman v. Railway Co., 35 Fed. 3; Woodbury v. Railroad Co., 72 Fed. 371. Although foreclosure proceedings are pending in a state court, the debt itself may be prosecuted by action in the federal court. Gordon v. Gilfoil, 99 U. S. 168. And a state court has no jurisdiction or power to interfere, by injunction or otherwise, with a decree of foreclosure made by a federal circuit court which had jurisdiction of the parties and the subject-matter. Gernsheim v. Olcott (Sup.) 7 N. Y. Supp. 872. Although a mortgagor of realty has made a statutory general assignment for the benefit of his creditors, this does not affect the right of the mortgagee, being a citizen of another state, to sue in the federal court for the foreclosure of the mortgage; nor is it necessary for him to obtain the permission of the state court having jurisdiction over the assigned estate. Edwards v. Hill, 8 C. C. A. 233, 59 Fed. 723. And see Purifier Co. v.

Digitized by Google

McGroarty, 136 U. S. 237, 10 Sup. Ct. 1017; Morris v. Lindauer, 4 C. C. A. 162, 54 Fed. 23. But when an assignee for the benefit of creditors has been judicially appointed in proceedings had under the insolvency laws of a state, and has been accepted and qualified, so that all the insolvent's rights and property are vested in him under the trust, such property is thereby placed in gremio legis, and cannot be seized on process issuing from another court. Geilinger v. Philippi, 133 U. S. 246, 10 Sup. Ct. 266; The J. G. Chapman, 62 Fed. 939. In such a case, therefore, while the federal court would undoubtedly have jurisdiction to render judgment for the amount found to be due on the mortgage, it would be obliged to refrain from attempting, by its decree, to take the res, the mortgaged estate, out of the custody of the state officer. Where the statute of the state provides for a stay of a year and a day in an action of "scire facias sur mortgage," this, it is held, has no application to a bill in equity to foreclose, and consequently does not impose any limitation upon the jurisdiction of the federal courts. Woodbury v. Railroad Co., 72 Fed. 371. When corporations of three states are consolidated into one, a federal court of equity, in foreclosing a consolidated mortgage upon the entire property, has jurisdiction to sell all the property in all the states; separate suits are not necessary. Blackburn v. Railroad Co., Fed. Cas. No. 1,467. A suit for the foreclosure of a mortgage, begun in a state court, may be thence removed to the United States circuit court, under the provisions of the act of congress in that behalf, if the prescribed conditions are met, but not unless all the parties on one side of the controversy are citizens of different states from those on the other. Ayres v. Wiswall, 112 U. S. 187, 5 Sup. Ct. 90.

3. SAME; AS AFFECTED BY STATE LAWS AS TO FORUM AND FORM OF ACTION.

The foreclosure of mortgages is an ancient and well-recognized head of equity jurisdiction. And the equity jurisdiction of the courts of the United States is not subject to either limitation or restraint by the state authorities, and is uniform throughout the different states of the Union. Gamewell Fire-Alarm Tel. Co. v. Mayor, etc., 31 Fed. 312. Since the federal constitution recognizes the distinction between law and equity, it must be observed in the federal courts, although the distinction may have been abolished by the laws of the state where the federal court sits. Bennett v. Butterworth, 11 How. 669; U. S. v. Howland, 4 Wheat. 108. Consequently, although the statutes of a state may provide a summary method for the foreclosure of mortgages executed in a particular manner, or may provide for a special statutory proceeding at law, applicable to all mortgages, doing away with the jurisdiction of equity in such cases, and although the remedy so provided may be entirely adequate and complete, yet such provisions do not apply to the federal courts sitting within the state, nor deprive them of power and jurisdiction to decree foreclosure of a mortgage on land therein, according to the forms and practice of chancery. Fleitas v. Richardson, 147 U. S. 538, 13 Sup. Ct. 429; Ray v. Tatum, 18 C. C. A. 464, 72 Fed. 112; Benjamin v. Cavaroc, Fed. Cas. No. 1,300; De La Vergne Refrigerating Mach. Co. v. Montgomery Brewing Co., 46 Fed. 829; Coal Co. v. Bingham, 97 Mo. 196, 10 S. W. 32. Nor does the existence of such a state law change the character of the cause of action so as to transfer the remedy to the law side of a United States court. Benjamin v. Cavaroc, supra. Again, the fact that a state statute may provide that all actions of a particular character arising within its limits shall be brought in a certain state court, will not affect the jurisdiction of the federal courts in such actions, if otherwise competent to take cognizance thereof. Hence, where the state statute provides that guardians may be licensed to mortgage the estates of their wards, but that foreclosure of such mortgages shall be made only by petition to the county court, this will not preclude the mortgagee from bringing a suit for foreclosure of such a mortgage in a federal court, if the citizenship of the parties and the amount involved are such as to confer jurisdiction. Davis v. James, 2 Fed. 618. But where the question is not one of jurisdiction, but of procedure merely, the federal courts will generally follow the rules of the state. Thus, where the state statute requires the whole recovery on the mortgage debt to be had in one action of foreclosure, and forbids the maintenance of a separate personal action for judgment on the debt secured by the mortgage, the federal courts will follow this rule. Winters v. Mining Co., 57 Fed. 287.

While the nonresident suitor may always invoke the equity jurisdiction of the

Digitized by Google

federal courts for the foreclosure of his mortgage, and this, as we have seen, cannot be limited or restrained by state law, yet it is also competent for those courts, in appropriate cases, to adopt the forms of action and modes of procedure in vogue in the state where they sit. Thus, the federal courts have jurisdiction in an action of "scire facias sur mortgage," for the purpose of foreclosing a mortgage, according to the forms of procedure prescribed by the statutes of Pennsylvania. Black v. Black, 74 Fed. 978. So again, under the statutes of Massachusetts, a mortgagee may have a real action against the mortgagor, after condition broken, for possession of the premises, and either party may require that a conditional judgment shall be entered ascertaining the amount of the debt and awarding possession to the demandant, unless the tenant shall pay the amount so ascertained within two months. There is no order to pay the money, and if it is not paid there can be no execution to recover it, but a writ of possession issues, and the tenant has three years from the execution of this writ within which to redeem the premises. It is held that the federal circuit court has jurisdiction of such an action, brought for such a purpose, when the parties are citizens of different states and the amount involved is sufficient. Whiting v. Wellington, 10 Fed. 810. In this case, Lowell, J., said: "This action is a substitute for an entry upon the land for the purposes of foreclosure, plus a judicial determination of the right of entry. If it were a substitute for a bill in equity to foreclose, it is doubtful whether this court could entertain it, because our equitable jurisdiction is independent of any remedies given by the states in the nature of actions at common law for enforcing equitable rights. This is an action to try the right of possession; and, if any part of the statute is not in force here, it is merely that which gives the tenant an equitable stay for two months on certain terms."

4. SAME; CITIZENSHIP OF PARTIES.

Where the jurisdiction of a federal court, in a mortgage foreclosure, depends on the diverse citizenship of the parties, it is necessary that all parties, omitting such as are merely nominal or formal parties or improperly joined, should possess the requisite diversity of citizenship; that is, the jurisdiction cannot be sustained if any one of the several plaintiffs is a citizen of the same state with any one of the several defendants. Mangels v. Brewing Co., 53 Fed. 513. Where the suit is brought against the mortgagor and the purchaser of the equity of redemption, the mortgagor is not a necessary party unless made so by statute; but if the statute requires him to be joined in such suit, in order to enable the mortgagee to preserve his right to seek a judgment against the mortgagor on the note or other original obligation, then he is a necessary party, and his citizenship must be taken into account in determining the jurisdiction of the federal court. Winchell v. Carll, 24 Fed. 865. To a suit to foreclose a mortgage brought in a federal court in one state against a corporation of that state by bondholders, citizens of another state, other bondholders, who are citizens of the state where the suit is brought, cannot be made parties plaintiff, as the jurisdiction is dependent upon citizenship; but, under such circumstances, the plaintiffs can foreclose the mortgage separately, and the proceeds of the sale, if a sale is made, will be distributed according to the rights of all. Jackson & Sharp Co. v. Burlington & L. R. Co., 29 Fed. 474. It is provided, by Rev. St. U. S. § 737, that, when there are several defendants in any suit in the federal courts, one or more of whom are neither inhabitants of nor found within the district in which the suit is brought, and do not voluntarily appear, the court may entertain jurisdiction, and proceed to trial and adjudication of the suit between the parties who are properly before it; but the judgment rendered thereon shall not conclude or prejudice other parties not regularly served with process, nor voluntarily appearing to answer, and the nonjoinder of such other parties shall not constitute matter of abatement or objection to the suit. Under this act, the circuit court has jurisdiction of a suit by a resident of another district to foreclose a mortgage on land situated within the district, though some of the defendants are, and others are not, residents of the district in which the suit is brought. Ames v. Holderbaum, 42 Fed. 341. But the act does not empower the court to foreclose a mortgage given by an executor under a power in the will on land devised to testator's children, where some of the devisees are nonresidents, and are neither made parties defendant, nor appear to answer. In such case, the court

Digitized by Google

cannot proceed with the suit, and foreclose the mortgage, without affecting the interest of the devisees who are not parties, since, the mortgage covering all the land, and the devisees being joint tenants, a decree would affect the interests of the nonresident devisees just as if they owned the entire property. Nor can the mortgage be foreclosed as to the interest of those devisees only who are parties to the suit, since the entire lien would thus be cast on their interest. Detweiler v. Holderbaum, 42 Fed. 337.

A suit to foreclose a deed of trust in the nature of a mortgage is properly brought in the name of the trustee; and the fact that the beneficiary is a citizen of the same state with the grantor does not defeat the jurisdiction of the federal court, if the trustee is a citizen of a different state. Dodge v. Tulleys, 144 U. S. 451, 12 Sup. Ct. 728. But, when the mortgagor and the trustee are citizens of the same state, the holder of the obligation secured by the mortgage cannot bring suit in a federal court to foreclose the mortgage in his own name, without showing reason why the suit is not brought by the trustee. Needham v. Wilson, 47 Fed. 97. Where, however, some of the holders of bonds apply to the trustee, to whom the deed of trust is given as security for the bonds, to foreclose it, and he refuses to do so, they may bring a suit for such purpose, making the trustee and the other bondholders who refuse to join them in the suit defendants therein. A federal court has jurisdiction of such a suit where the defendants, as thus arranged, are citizens of different states from the complainants. Hotel Co. v. Wade, 97 U. S. 13; Reinach v. Railroad Co., 58 Fed. 33. If a bondholder has been let in as a party to a cause concerning the trust property, and as such has a separate controversy with citizens of another state, his right to remove the cause to the federal court is not affected by the citizenship of the trustee named in the mortgage deed, who is not a party in fact, and had refused to move to be made a party, or otherwise to execute the trust. If brought in, such trustee would be only a nominal party. Hack v. Railway Co., 23 Fed. 356.

If the federal court already has possession, through its receiver, of the property covered by the mortgage, it will have jurisdiction of an action to foreclose the mortgage, without regard to the citizenship of the parties, because, in that case, the foreclosure proceeding is regarded as merely ancillary or supplementary to the original suit, and the jurisdiction therein originally acquired will continue until the final disposition of the res and all the controversies concerning it. Fish v. Railroad Co., 79 Fed. 131; Park v. Railroad Co., 70 Fed. 641.

5. SAME; SUIT BY ASSIGNEE OF MORTGAGE.

Section 11 of the judiciary act of 1789 (Rev. St. U. S. § 629) provided that "no circuit court shall have cognizance of any suit to recover the contents of any promissory note or other chose in action in favor of an assignee, unless a suit might have been prosecuted in such court to recover the said contents if no assignment had been made, except in cases of foreign bills of exchange." In the single case of Dundas v. Bowler, Fed. Cas. No. 4,140, it was held that an assignee of a mortgage was not within the restrictive language of this section, and that such assignee might maintain an action to foreclose the mortgage in a federal court, if he was a citizen of a different state from the mortgagor, although the original mortgagee would not have been qualified to sue in that court. But the supreme court of the United States, in Sheldon v. Sill, 8 How. 441, held that a debt secured by bond and mortgage is a chose in action, and, when the mortgagor and mortgagee are citizens of the same state, an assignee, though a citizen of another state, cannot maintain a bill for foreclosure in a federal court. And see Hill v. Winne, Fed. Cas. No. 6,503. The law continued thus until 1875, when an act was passed (18 Stat. 470) which provided, in its first section, that no circuit or district court should "have cognizance of any suit founded on contract in favor of an assignee, unless a suit might have been prosecuted in such court to recover thereon if no assignment had been made, except in cases of promissory notes negotiable by the law merchant and bills of exchange." The exception of negotiable notes from the restriction of this section made an important difference in the jurisdiction of the courts in foreclosure cases; for it was now held that, if the debt secured by the mortgage was evidenced by a negotiable promissory note, the assignee thereof might sue in the United States courts to foreclose the mortgage, with-

Digitized by Google

out regard to the citizenship of the original mortgagee. Tredway v. Sanger, 107 U. S. 323, 2 Sup. Ct. 691; Mersman v. Werges, 112 U. S. 139, 5 Sup. Ct. 65; Allen v. O'Donald, 28 Fed. 17; Seckel v. Backhaus, Fed. Cas. No. 12,599. Still, if the obligation secured by the mortgage was in the form of a bond, or anything except a promissory note, an assignee could not sue on the obligation or to foreclose the mortgage when both the original parties were citizens of the same state. Blacklock v. Small, 127 U. S. 96, 8 Sup. Ct. 1096; Hampton v. Canal Co., 19 Fed. 1. This provision of the act of 1875 has been superseded, and the case is now governed by section 1 of the act of March 3, 1887 (25 Stat. 433), which enacts that no circuit or district court shall "have cognizance of any suit, except upon foreign bills of exchange, to recover the contents of any promissory note or other chose in action in favor of any assignee, or of any subsequent holder if such instrument be payable to bearer and be not made by any corporation, unless such suit might have been prosecuted in such court to recover the said contents if no assignment or transfer had been made." It will be perceived that this act revokes the exception in the case of promissory notes made by the act of 1875, and reverts, in its operative words, to the language of the original act of 1789. So far, therefore, as concerns the jurisdiction of the federal courts in mortgage foreclosures, the decisions made under the earliest statute, and particularly that in Sheldon v. Sill, supra, are again applicable; and it must now be held that the courts of the United States have no jurisdiction of an action by the assignee of a mortgage to foreclose the same, whether the obligation secured thereby be in the form of a note, a bond, or otherwise, unless the mortgagor and the original mortgagee were citizens of different states. The exception in the act of 1887, as to instruments payable to bearer and made by a corporation, would probably apply to the case of a corporate mortgage securing bonds payable to the bearer. Such a mortgage might be foreclosed at the suit of a nonresident holder of the bonds, although the parties to whom they were originally issued, or from whom the plaintiff acquired them, would not have had the capacity, on the ground of citizenship, to resort to the federal courts.

Where a deed of trust in the nature of a mortgage set out in full a contract between the mortgagor and certain parties for the conveyance of several parcels of land to him, and then conveyed to the mortgagee all the right, title, and interest which the mortgagor had or might thereafter acquire in and to the lands embraced by the contract, it was held that the conveyance was in legal effect an assignment of the contract, and that the assignee could not maintain a suit for the enforcement of this contract in a federal court, unless his assignor could have done so. Shoecraft v. Bloxham, 124 U. S. 730, 8 Sup. Ct. 686. But where a statute of the state provides that the mortgagee may bring a real action, after breach of condition of the mortgage, to recover possession of the premises, and that a conditional judgment may be entered ascertaining the amount of the debt and awarding possession to the demandant, unless the tenant shall pay the amount so ascertained within a limited time, such action may be maintained in a federal court by an assignee of the mortgage, if he is a citizen of a different state from that of the mortgagor, without regard to the citizenship of his assignor; for this is not an action to "recover the contents" of a "chose in action." Whiting v. Wellington, 10 Fed. 810.

Section 5 of the act of March 3, 1875 (18 Stat. 470), provides that "if, in any suit commenced in a circuit court, or removed from a state court to a circuit court of the United States, it shall appear to the satisfaction of said circuit court, at any time after such suit has been brought or removed thereto, * * * that the parties to such suit have been improperly or collusively made or joined, either as plaintiffs or defendants, for the purpose of creating a case cognizable or removable under this act, the said circuit court shall proceed no further therein, but shall dismiss the suit or remand it to the court from which it was removed as justice may require." When a note and mortgage are transferred to a nonresident of the state for a valuable consideration, and the assignor's interest thereupon entirely determines, the mere fact that one of the purposes of the transfer was to establish the diversity of citizenship necessary to make the case cognizable in a federal court does not render the transaction collusive within the meaning of this section. Smith v. Kernochen, 7 How. 198; Cross v. Allen, 141 U. S. 528, 12 Sup. Ct. 67; Lanier v. Nash, 121 U. S. 404, 7 Sup. Ct. 919.

Digitized by Google

6. SAME; AMOUNT IN CONTROVERSY.

In order that a federal court should be enabled to take jurisdiction of a suit between citizens of different states, it is necessary that the amount in controversy, "exclusive of interest and costs," should exceed $2,000. In Agency Co. v. Ray, 69 Fed. 657, where suit was brought to enforce a mortgage securing a bond for $2,000 and two annual interest coupons which had been severed therefrom; and the bond itself was not yet due from lapse of time, but, by its terms, became due on the nonpayment of one interest coupon,—it was held that the coupons could not be considered as separate obligations for the purpose of making up the jurisdictional amount, and, at the same time, be regarded as interest for the purpose of maturing the bond, and consequently the federal court was without jurisdiction. But where a mortgagee has a right, on foreclosure, to collect, as part of the debt secured, the premiums paid by him for insurance of the property mortgaged, the amount of such premiums is properly included with the principal in a suit to foreclose, in estimating the amount involved, for the purpose of determining the jurisdiction of the federal courts. Coolidge v. Ray, 75 Fed. 39. Where a second mortgagee sued in equity to foreclose his mortgage, and the holder of the first mortgage, having been joined as a defendant, filed a cross bill to foreclose his mortgage, and this claim was resisted by both the mortgagor and the second mortgagee, on the ground that the first mortgage had been satisfied, it was held that the amount in controversy was not limited to the amount of the second mortgage, but included the amount of the first mortgage also. Wolcott v. Sprague, 55 Fed. 545.

7. PROCEDURE AS AFFECTED BY STATE LAWS AND PRACTICE.

Although neither the jurisdiction nor the procedure of the federal courts in equity is derived from, or can be controlled or limited by, the laws of the states, yet it is incumbent upon them, in foreclosure cases, to follow such provisions of the law of the state, whether statutory or judicial, as have become rules of property, and it is entirely proper for them to conform the proceedings, as near as may be, to the practice obtaining in the state. For example, where the statutes of the state wherein the land lies, or the decisions of its courts, have established the rule that land covered by a mortgage and afterwards sold in parcels to different purchasers at different times must be sold, on foreclosure of the mortgage, in parcels and in the inverse order of alienation, this constitutes a rule of property which must be followed by the federal courts sitting within that state. Orvis v. Powell, 98 U. S. 176. So, a law of the state that, where notes of the same date, maturing at different times, are secured by a mortgage, the note first maturing is entitled to priority, though transferred without assignment of the mortgage, will be followed in a federal court, where the land lies within that state and the parties to the mortgage resided there at the time of its execution. "This being the settled law of the state in respect of the construction and application of mortgages on property situated here, I understand that a like construction and operation will be given thereto by the federal courts sitting within the state, because the matter is not one of general commercial law, but pertains to the transfer of property; and therefore such rule of construction becomes, in effect, a rule of property." New York Security & Trust Co. v. Lombard Inv. Co., 65 Fed. 271. Again, if a stipulation in a mortgage of realty, that the mortgagor shall pay a fixed sum as an attorney's fee in case of foreclosure, is unlawful and void by the laws of the state, as interpreted by its supreme court, such a stipulation cannot be enforced in a federal court upon foreclosure of a mortgage on land in that state. Bendey v. Townsend, 109 U. S. 665, 3 Sup. Ct. 482; Dodge v. Tulleys, 144 U. S. 451, 12 Sup. Ct. 728; Gray v. Havemeyer, 10 U. S. App. 456, 3 C. C. A. 497, and 53 Fed. 174; Vitrified Paving & Pressed Brick Co. v. Snead & Co. Iron Works, 5 C. C. A. 418, 56 Fed. 64. But in a suit to foreclose a trust deed in such state, the federal court may, in accordance with the general principles of equity, allow the trustee a reasonable attorney's fee. Dodge v. Tulleys, supra. On the other hand, where the state law provides that if the complainant has recovered a judgment at law for the debt secured by the mortgage, he must exhaust his remedy by general execution against the debtor's property before being allowed to sell the mortgaged premises on foreclosure, this provision is not applicable in foreclosures in the federal courts. Dow v. Chamberlin, Fed. Cas. No. 4,037. And whatever may be the rule of the state courts as to the

Digitized by Google

officer who is to make the foreclosure sale, such sales are usually made in the federal court by the marshal of the district where the decree was entered, or by a master appointed by the court as directed in the decree. Blossom v. Railroad Co., 3 Wall. 196. And it is proper for the officer who makes the sale to make a report or return to the court for confirmation, although this is not required by the practice in the state courts. Nalle v. Young, 160 U. S. 624, 16 Sup. Ct. 420. When there is room to doubt whether the contract in question is a mortgage or a conditional sale, but, under the statutes of the state, it would be considered a mortgage, the federal court, in carrying the contract into effect, will be guided by the decisions of the supreme court of the state. Mining Co. v. Baker, 23 Fed. 258.

8. DECREE FOR DEFICIENCY.

In Noonan v. Lee, 2 Black, 499, and Orchard v. Hughes, 1 Wall. 73, it was held that, in the absence of a rule of the supreme court authorizing it to be done, it was not competent for an inferior federal court to make a decree that the mortgagor should pay the balance which might remain unsatisfied after exhausting the proceeds of the mortgaged premises. Thereafter equity rule No. 92 was adopted, which provides that "in suits in equity for the foreclosure of mortgages in the circuit courts of the United States, or in any court of the territories having jurisdiction of the same, a decree may be rendered for any balance that may be found due to the complainant over and above the proceeds of the sale or sales, and execution may issue for the collection of the same, as is provided in the eighth rule of this court regulating equity practice where the decree is solely for the payment of money." At first it was thought that this rule left it to the discretion of the trial court whether or not a general execution should be ordered for the balance remaining after the sale of the premises. Phelps v. Loyhead, Fed. Cas. No. 11,077. But it is now understood that the rule is imperative; that the word "may" ("a decree may be rendered") is to be taken as equivalent to "shall" or "must," and that the complainant is entitled to a deficiency decree as a matter of right. Insurance Co. v. Keith, 23 C. C. A. 196, 77 Fed. 374. Since, in equity, a vendor's lien expressly reserved on the face of a deed has the same effect as a mortgage, it comes within the provision of this rule, and a decree for deficiency must be entered upon the foreclosure of such a lien. White v. Ewing, 16 C. C. A. 296, 69 Fed. 451. But rule 92 does not authorize a deficiency decree unless the bill shows that the amount is actually due. Ohio Cent. R. Co. v. Central Trust Co., 133 U. S. 83, 10 Sup. Ct. 235.

9. REDEMPTION AFTER FORECLOSURE AND SALE.

A right of redemption after foreclosure sale is wholly statutory; no such right existed at common law or in the system of equity as administered in the courts of England previous to the organization of our government. Parker v. Dacres, 130 U. S. 43, 9 Sup. Ct. 433. Consequently, no such right is claimable in the federal courts, unless it is given by the statutes of the state where the land lies. But in Brine v. Insurance Co., 96 U. S. 627, it was said that the laws of the state in which land is situated control exclusively its descent, alienation, and transfer from one person to another, and the effect and construction of instruments intended to convey it. All such laws in existence at the time when a contract in regard to real estate is made, including the contract of mortgage, enter into and become a part of such contract. Hence a state statute which allows to a mortgagor 12 months to redeem after a sale on foreclosure, and 3 months after that to any judgment creditor of the mortgagor, governs to that extent the mode of transferring the title, and confers a substantial right, and thereby becomes a rule of property. It follows that this right of redemption after sale is obligatory on the federal courts sitting in equity, as it is on the courts of the state, and the rules of practice of the federal courts must be made to conform to the law of the state, so far as may be necessary to give substantial effect to the right. This decision has been followed in many cases, and the principle is now well established. Orvis v. Powell, 98 U. S. 176; Swift v. Smith, 102 U. S. 442; Mason v. Insurance Co., 106 U. S. 164, 1 Sup. Ct. 165; Parker v. Dacres, 130 U. S. 43, 9 Sup. Ct. 433; Dexter v. Arnold, Fed. Cas. No. 3,859; Manufacturing Co. v. McCollock, 24 Fed. 667; Jackson & Sharp Co. v. Burlington & L. R. Co., 29 Fed. 474. Whether

Digitized by Google

or not provision is made for it in the decree of foreclosure rendered by the federal court, the defendant will still have the right to redeem from the sale at any time within the period allowed by the statutes of the state. Burley v. Flint, Fed. Cas. No. 2,168. But an objection that the decree does not give the time allowed for redemption by the laws of the state cannot be urged by creditors of the mortgagor except in connection with an offer to redeem. Hards v. Insurance Co., Fed. Cas. No. 6,055. Compare Gordon v. Hobart, Fed. Cas. No. 5,609. While the local statute law giving this right of redemption is thus obligatory on the federal court, yet it is competent for that court, by rule, to prescribe the mode in which redemption from sales under its own decrees may be effected; and, although the statute of the state requires the redemptioner to pay the money to the officer holding the execution, the federal court may make a rule requiring such payment to be made to the clerk of the court, for such a rule comes within the domain of practice, and does not affect the substantial right of redemption within the time fixed by the statute of the state. Insurance Co. v. Cushman, 108 U. S. 51, 2 Sup. Ct. 236. And a rule of the federal court requiring the redemptioner to pay 1 per cent. commission to the clerk, on the amount paid into court for the redemption of the property, in addition to the amount going to the purchaser, is not in derogation of the right of redemption as given by the state law. Blair v. Railroad Co., 12 Fed. 750. In another case, where it appeared that the statute gave the debtor 12 months from the confirmation of the sale in which to redeem, and that the practice of the state courts was to report the sale at once for confirmation, but the federal court gave the debtor 12 months from the day of sale in which to redeem, it being its practice to make the final confirmation and the deed at the same time,—that is, after the expiration of the year for redemption,—it was held that this was a substantial recognition of the right to redeem within 12 months, and the decree of the federal court should not be disturbed. Allis v. Insurance Co., 97 U. S. 144. The statutes of Illinois giving the right to redeem mortgaged lands sold under decree of foreclosure do not embrace the real estate of a railroad corporation mortgaged in connection with its franchises and personal property. Its realty, personalty, and franchises, so mortgaged, should be sold as an entirety and without the right of redemption given by the statute. Hammock v. Trust Co., 105 U. S. 77. H. CAMPBELL BLACK.

(79 Fed. 228.)

MERRITT et al. v. AMERICAN STEEL-BARGE CO.

(Circuit Court of Appeals, Eighth Circuit. March 1, 1897.)

No. 741.

1. COURTS — CONCURRENT JURISDICTION — POSSESSION OF RES — SUITS IN PERSONAM.

   While, in cases in which a court has taken, or, in order to administer the relief sought, may be compelled to take, possession of specific real or personal property to which the suit relates, the court which first acquires jurisdiction of the cause is entitled to retain it, to the exclusion of any other court, this rule does not apply to suits merely in personam, though involving the same issues; and the pendency of such a suit in one jurisdiction does not prevent a party thereto from bringing a similar suit, involving the same issues, against the other party, in another jurisdiction.

2. CORPORATIONS—CERTIFICATES OF STOCK—SUIT TO ESTABLISH LIEN—SUBSTITUTED SERVICE.

   Though certificates of corporate stock are technically only written evidences of interests in the corporate property, they are so far in the nature of chattels that, when certificates of stock in a corporation of one state are held in pledge or as collateral in another state, the courts of such latter state are authorized to proceed to establish a lien thereon in a suit commenced by substituted service, under a statute authorizing such service in suits to establish liens on personal property within the state.

Digitized by Google

3. APPEAL AND ERROR—REVIEW—PLEA OF RES JUDICATA—DEMURRER.
In reviewing a decision sustaining a demurrer to a plea which alleges that a judgment set up in bar of the action was rendered upon due and proper notice, and that the court had and acquired jurisdiction of the subject-matter and the parties, the appellate court must take such allegations as true, and cannot look into exhibits attached to the answer in the case to ascertain whether the judgment does in fact show all the elements of jurisdiction.

In Error to the Circuit Court of the United States for the District of Minnesota.

This case was before this court, at the May term, 1896, on a motion to dismiss the writ of error. Merritt v. Barge Co., 40 U. S. App. 127, 21 C. C. A. 525, and 75 Fed. 813. On the present occasion it is here for determination on the merits. Alfred Merritt and Leonidas Merritt, the plaintiffs in error, who were the plaintiffs below, on April 10, 1894, sued the American Steel-Barge Company, the defendant in error, in the district court for St. Louis county, state of Minnesota, to recover the value of 11,331.3 shares of stock in the Lake Superior Consolidated Iron Mines. The complaint alleged, in substance, the following facts: That in the months of January and February, 1893, the plaintiffs borrowed of Charles W. Wetmore $432,575, giving as an evidence of such indebtedness their five negotiable promissory notes, which were secured by the pledge of certain shares of stock in the Duluth, Missabe & Northern Railway Company and in the Mountain Iron Company and the Missabe Iron Company, the shares of stock in said railway company alone being of the value of $565,000; that at the time said loan was effected it was agreed that said Wetmore "should not repledge, sell, or dispose of" any of said stock, and that, if the plaintiffs so desired, the first four of the aforesaid notes should be extended for a period of six months from their maturity; that on April 24, 1893, said Wetmore, in violation of his agreement, transferred all the shares of stock in said railway company by him held in pledge to John D. Rockefeller, as security for an individual debt which he owed to said Rockefeller, which stock was at the time fairly worth $565,000; that the plaintiffs had elected to waive the tort thus committed by said Wetmore, and to consider the transaction last aforesaid as a sale of the stock by said Wetmore for their benefit; that on March 13, 1893, said Wetmore had further converted to his own use certain bonds belonging to the plaintiffs, which were of the value of $90,000, and that the plaintiffs had further elected to treat the conversion of said bonds as a sale of the same by said Wetmore for their account; that after these several transactions said Wetmore had sold and transferred the five promissory notes heretofore mentioned, and the remaining shares of stock which had been pledged to secure the payment of the same, to the American Steel-Barge Company; that said Wetmore was at the time the vice president and chief managing officer of said barge company; that said notes and stocks were so transferred to the barge company to secure an indebtedness of said Wetmore to said company which had been theretofore contracted; that at the time of such transfer said barge company well knew the terms and conditions under which the said Wetmore held the aforesaid notes and stock, and that he had no right or authority to make the transfer in question; that after the last-mentioned transfer the barge company had converted the stocks by it received into 11,331.3 shares of the capital stock of the Lake Superior Consolidated Iron Mines, a corporation organized under the laws of New Jersey; that the plaintiffs had demanded of the barge company the surrender and return of the stocks last aforesaid; that it had refused to accede to such request; and that the plaintiffs had thereupon elected to waive the tort so committed, and to sue the barge company in assumpsit for the value of the shares of stock by it received and retained. The case was removed by the barge company, it being a corporation organized under the laws of New Jersey, from the state court to the circuit court of the United States for the district of Minnesota on April 18, 1894. After such removal the barge company filed an amended answer to the aforesaid complaint, whereby, among other defenses, it interposed the following plea, in substance: That being the legal owner and holder of the five promissory notes referred to in the complaint, and having in its possession,

Digitized by Google

as pledgee, the collateral attached thereto, consisting of 11,331.3 shares of stock in the Lake Superior Consolidated Iron Mines, it had attempted, after the maturity of said notes, and prior to May 18, 1894, to sell the collateral at public auction in the city of New York, where the notes were made payable, for the purpose of satisfying said notes, but that it had been prevented from so doing by an injunction restraining such sale, which had been obtained by the plaintiffs, Alfred Merritt and Leonidas Merritt, in an action brought by them against the defendant barge company in the supreme court of the city and county of New York; that said action so brought by the plaintiffs was dismissed by them prior to a final judgment therein, whereupon the barge company, in May, 1894, had itself brought a suit in said supreme court of the city and county of New York against Alfred Merritt and Leonidas Merritt for the purpose of determining the rights of the parties in and to the five promissory notes mentioned in the complaint, and in and to the aforesaid 11,331.3 shares of stock held as collateral thereto; that in the suit so instituted by the barge company it prayed judgment that the defendants in said suit might be excluded from any interest in said notes, and in said shares of stock so pledged as collateral, except as subordinate to the lien of the barge company; that the lien of the latter company upon said stock might be fixed and defined; that the right to sell the same for the satisfaction of the five notes by it held might be established; that said stock might be sold pursuant to the decree of the court; and that the proceeds might be applied to the payment of said notes. The plea further averred that said notes were payable in the city of New York; that when said suit was brought by the barge company the certificates representing the shares of stock in controversy were situated in the city of New York, and were subject to the jurisdiction of the supreme court for the city and county of New York; that said court then and there had full jurisdiction of said stock for the purpose of establishing and foreclosing the alleged lien of the barge company; that after due proceedings had in said court a final decree was rendered in accordance with the prayer of the complaint, whereby the said Alfred Merritt and Leonidas Merritt were excluded from all interest in said notes and stock, except as subordinate to the lien of the barge company, and whereby the barge company's title to the notes and its title to the stock, as a pledgee thereof, were established, and whereby the stock was adjudged to be sold at public auction and the proceeds thereof applied to the payment of the aforesaid notes. The plea further averred that the judgment and decree last aforesaid was rendered upon due and proper notice to the defendants, Alfred Merritt and Leonidas Merritt, and upon testimony duly and properly taken, proving all of the allegations contained in the bill of complaint; that pursuant to the decree so obtained the stock in question was afterwards sold at public auction; and that at such sale it was purchased by the barge company, on the 24th day of October, 1894, for the sum of $25,000. To the aforesaid plea setting up the proceedings in the supreme court of the city and county of New York as a bar to the present action, the plaintiffs demurred, but the demurrer was overruled. Subsequently, the plaintiffs having declined to reply to the facts alleged in the aforesaid plea, a judgment was rendered on the pleadings in favor of the defendant. The writ of error is brought to reverse that judgment.

A. A. Harris and Henry E. Harris, for plaintiffs in error.

James H. Hoyt and Frank B. Kellogg (Cushman K. Davis and C. A. Severance with him on brief), for defendants in error.

Before CALDWELL and THAYER, Circuit Judges.

THAYER, Circuit Judge, after stating the case as above, delivered the opinion of the court.

The suit which was instituted in the supreme court of the city and county of New York by the American Steel-Barge Company against Alfred Merritt and Leonidas Merritt, the plaintiffs in this suit, according to the averments of the plea, was an action to establish and foreclose a lien on personal property alleged to be sit-

Digitized by Google

uated in New York, and it was brought under the provisions of a local statute of that state which authorized such a proceeding to be maintained on constructive or substituted service. Code Civ. Proc. N. Y. 1877, §§ 438–444, inclusive. It was a suit in the nature of a proceeding in rem, and it retained that character to the end, inasmuch as the defendants, although served with summons outside of the state of New York, as provided by the laws of that state, did not appear at any stage of the proceedings so as to authorize the rendition of a personal judgment against them. The fundamental fact to be alleged and proven in such proceeding was the existence of a valid lien in favor of the barge company upon the property in controversy, to wit, 11,331.3 shares of stock in the Lake Superior Consolidated Iron Mines. On the other hand, it appears from the complaint in the case at bar that it was a suit which was brought upon the theory that the barge company had no lien upon the property in question, and that it had rendered itself liable to the plaintiffs for the value of said property by refusing to restore it to the plaintiffs when a return thereof was demanded. The plaintiffs do not deny the practical identity of the issues in the two suits, —the one pending in Minnesota, and the other in New York,—and they concede, as we understand, that because the issues were identical, each having reference to the existence of the alleged lien, the judgment of the New York court with respect thereto was well pleaded in bar to the present action, provided the New York court rightfully proceeded with the hearing and determination of the case before it, notwithstanding the pendency of the prior suit in Minnesota, and provided, further, that the New York court acquired lawful jurisdiction of the subject-matter. Assuming the proposition so conceded to be correct, we proceed to inquire whether, as is contended by the plaintiffs in error, the fact that the Minnesota suit was first brought precluded the New York court from entertaining jurisdiction of the suit which was subsequently instituted in that forum.

The doctrine is well settled that when a court, in the progress of a suit properly pending before it, takes possession of property, either under a writ of replevin or attachment, or by other mesne or final process, or by the appointment of a receiver or assignee, its jurisdiction over the property for the time being becomes exclusive, and no other court can lawfully interfere with the possession so acquired. While property is so held it cannot be sold under the judgment, sentence, or decree of any other tribunal. Moreover, so long as the property remains in custodia legis, no other court, unless by special leave of the court which first acquired jurisdiction, can lawfully proceed with the trial and determination of a suit the object of which is to establish a lien against the property, or to subject the specific property to the payment of debts, or which may result in creating conflicting rights or titles thereto. The possession of the res vests the court which has first acquired jurisdiction with the power to hear and determine all controversies relating thereto, and for the time being disables other courts of co-ordinate jurisdiction from exercising a like power. This rule is essential to the or-

Digitized by Google

derly administration of justice, and to prevent unseemly conflicts between courts whose jurisdiction embraces the same subjects and persons. Freeman v. Howe, 24 How. 450; Peck v. Jenness, 7 How. 612, 624, 625; Taylor v. Carryl, 20 How. 583, 596, 597; Wiswall v. Sampson, 14 How. 52; Covell v. Heyman, 111 U. S. 176, 4 Sup. Ct. 355; Heidritter v. Oil-Cloth Co., 112 U. S. 294, 302, 5 Sup. Ct. 135; Riggs v. Johnson Co., 6 Wall. 166, 196; Central Trust Co. of New York v. South Atlantic & O. R. Co., 57 Fed. 3. The doctrine in question is not limited in its application to cases where property has actually been seized under judicial process before a second suit is instituted in another court, but it applies as well where suits are brought to enforce liens against specific property, to marshal assets, administer trusts, or liquidate insolvent estates, and in all other suits of a similar nature, where, in the progress of the litigation, the court may be compelled to assume the possession and control of specific personal or real property. In cases of the latter kind, the rule is that the tribunal which first acquires jurisdiction of the cause by the issuance and service of process is entitled to retain it to the end, without interference or hindrance on the part of any other court. And this rule, in its application to federal and state courts, being the outgrowth of necessity, is "a principle of right and of law," which leaves nothing to the discretion of a court, and may not be varied to suit the convenience of litigants. Gates v. Bucki, 12 U. S. App. 69, 4 C. C. A. 116, and 53 Fed. 961; Chittenden v. Brewster, 2 Wall. 191; Orton v. Smith, 18 How. 263, 265; Union Trust Co. v. Rockford, R. I. & St. L. R. Co., 6 Biss. 197, 24 Fed. Cas. 704; Owens v. Railroad Co., 20 Fed. 10; Union Mut. Life Ins. Co. v. University of Chicago, 6 Fed. 443. In the cases of Wallace v. McConnell, 13 Pet. 135, and Five Hundred and Five Thousand Feet of Lumber, 24 U. S. App. 509, 12 C. C. A. 628, and 65 Fed. 236, the doctrine under consideration was extended to garnishment proceedings brought in the courts of a state while the existence of the indebtedness was in litigation in a federal court. It was held, in substance, that, while the alleged debtor was contesting the existence of the debt in a suit brought against him in the federal court, the debt could not be attached by a third party under process emanating from a state court. And in the case of Sharon v. Terry, 36 Fed. 337, where a suit had been brought in the federal court to compel the surrender and cancellation of a paper purporting to be a written declaration of marriage, and to restrain the use thereof on the ground that it was a forgery, and a suit for divorce had subsequently been brought in a state court, wherein the writing was found to be genuine, Mr. Justice Field declined to recognize the latter adjudication; holding that, as the federal court had first acquired jurisdiction of the controversy to compel the surrender and cancellation of the forged document, it was not bound to adopt the finding of the state court that the document was genuine.

It does not follow, however, that the rule of comity to which we have referred operates to prevent a court from taking jurisdiction of a cause in all cases where a prior suit involving the same issue

Digitized by Google

or issues has been commenced in some other forum, and jurisdiction has been acquired by such other court over the parties litigant. Whether the pendency of a prior suit has such effect depends, as Mr. Justice Miller remarked, in substance, in Buck v. Colbath, 3 Wall. 334, 335, upon the character of the prior suit, the nature of the remedy and the relief sought, and the identity of the parties. If the prior action does not deal either actually or potentially with specific property or objects, but is strictly a suit in personam, in which nothing more than a personal judgment is sought, no reason is perceived why a subsequent action may not be brought and maintained in another jurisdiction, although it involves the determination of the same issue or issues on which the right to recover in the first suit depends. The bringing of such second suit, under the circumstances supposed, does not oust the court in which the first suit was instituted of its jurisdiction, or delay or obstruct it in the exercise of its jurisdiction, or lead to a conflict of authority, where each court acts in accordance with well-established rules of law. Although a judgment may be rendered in the second suit before the first suit is tried, and may be pleaded in bar in the latter suit because the issue and the parties to the two suits are the same, yet it has never been supposed that the fact that a judgment of another court is offered in evidence to conclude the parties on a given issue or issues either defeats or impairs its jurisdiction, or has any necessary tendency to occasion a conflict of authority. Whatever doubt we might otherwise entertain concerning the question whether the pendency of a suit strictly in personam has the effect of preventing a party to that suit from subsequently bringing a suit in another jurisdiction involving the same issue, and from pleading the judgment there recovered as an estoppel in the former action, is resolved by the fact that in a number of cases such practice has been sanctioned by the highest authority. Thus, in Stanton v. Embrey, 93 U. S. 548, the plaintiff first brought a suit in personam in the superior court of New London county, state of Connecticut, and while it was there pending and undetermined he brought a suit on the same cause of action in the supreme court of the District of Columbia. A plea of lis pendens was interposed in the latter suit, and was overruled; the court holding that the pendency of the suit in Connecticut did not prevent the bringing, nor the prosecution to final judgment, of a suit in the District of Columbia. In Insurance Co. v. Harris, 97 U. S. 331, suits were brought by Harris, as assignee of William H. Brune, who was himself an assignee of certain insurance policies, against the Mutual Life Insurance Company of New York, in the circuit court of the United States for the district of Maryland. Prior thereto a suit had been commenced by Mrs. Barry, the beneficiary named in the policies, in the supreme court of New York, against said William H. Brune and the insurance company, to recover the policies and have the assignment thereof to said Brune declared to be void. In the suit brought in New York, the insurance company filed an answer and a bill of interpleader, and obtained an order on the bill of interpleader permitting it to pay the amount due on the policies

Digitized by Google

into court, and restraining the several claimants of the policies from prosecuting actions against it after the money had been so paid. At what precise time the bill of interpleader was so filed, with reference to the commencement of the suit in the district of Maryland, does not appear; but the supreme court, through Mr. Justice Strong, declared that it was "perfectly immaterial whether the New York court first obtained jurisdiction of the subject and the parties," as the order made by the New York court on the bill of interpleader would in any event prevent a recovery against the insurance company in the suit pending in the district of Maryland, inasmuch as that order had been made before the latter suit was brought to trial. In the case of Buck v. Colbath, 3 Wall. 334, 345, while discussing the effect to be given to the pendency of a prior suit, the supreme court said:

"But it is not true that a court, having obtained jurisdiction of a subject-matter of a suit and of parties before it, thereby excludes all other courts from the right to adjudicate upon other matters having a very close connection with those before the first court, and in some instances requiring the decision of the same questions exactly."

And in Standley v. Roberts, 19 U. S. App. 407, 421, 8 C. C. A. 305, and 59 Fed. 836, this court said:

"There is no doubt that, in a suit in which the court obtains jurisdiction by the seizure or control of the subject-matter of the suit, the court which first acquires jurisdiction over it may retain the property in its custody until final judgment, and in many cases until such judgment is satisfied, and that it may use its writ of injunction or other proper process to effect this result. * * * It is equally well settled that the pendency of an action in one court will not bar or abate another action between the same parties, involving the same issues, in a court of co-ordinate jurisdiction, in which that jurisdiction is exercised, not by the seizure of the property, but by personal service of original process upon the defendants."

The decisions of the state courts likewise support the view that the pendency of a suit which is strictly a suit in personam will not prevent the commencement of a suit in another forum which involves the determination of the same issue or controversy. Paine v. Insurance Co., 11 R. I. 411; Duffy v. Lytle, 5 Watts, 120; Child v. Powder Works, 45 N. H. 547; Allis v. Davidson, 23 Minn. 442; Poorman v. Mitchell, 48 Mo. 45; Railroad Co. v. Grayson, 88 Ala. 572, 7 South. 122; Rogers v. Odell, 39 N. H. 452; Bank of U. S. v. Merchants Bank of Baltimore, 7 Gill, 415; Westcott v. Edmunds, 68 Pa. St. 34. In the case of Sharon v. Terry, 36 Fed. 337, 359, 360, it was conceded by Mr. Justice Field that a plaintiff has a right to sue on the same cause of action in different jurisdictions, where nothing more than a personal judgment against the defendant is demanded; and, if such be the law, we can see no sufficient reason for denying the right of a defendant who has been sued in one jurisdiction for the recovery of a personal judgment against him, to bring an action against the plaintiff in another jurisdiction, although that action is of such nature that it may require a determination of the same issue which is involved in the first suit. We are of opinion, therefore, that the New York judgment was entitled to full faith and credit when pleaded in the case at bar, notwithstanding the

Digitized by Google

fact that it was rendered in another jurisdiction, in an action which was there commenced after the suit at bar had been instituted, and after the court, in the case in hand, had acquired jurisdiction of the parties by the issuance and service of process. The latter action was a suit in personam, in which the only relief sought, or that could be afforded, was a money judgment against the barge company for the alleged wrongful conversion of the stock. Moreover, the bringing of such suit was an irrevocable election on the part of the plaintiffs to abandon all claim to the stock, and in lieu thereof to demand a judgment for its value. Butler v. Hildreth, 5 Metc. (Mass.) 49; Thompson v. Howard, 31 Mich. 309; Morris v. Rexford, 18 N. Y. 552; Town of Hartland v. Hackett, 57 Vt. 96; Rodermund v. Clark, 46 N. Y. 354; McDonald v. Pike, 60 Wis. 222, 19 N. W. 44; Kennedy v. Thorp, 51 N. Y. 174, 176; Terry v. Munger, 121 N. Y. 161, 24 N. E. 272. Under these circumstances, it must be conceded that the barge company was at liberty to bring an action to foreclose its alleged lien on the stock, if the laws of New York authorized a proceeding of that kind, and in so doing no rule of comity was violated. It must be further conceded, we think, that the conduct of the barge company in bringing the suit to foreclose its lien finds some justification in the fact that its right to sell the stock as pledgee had been challenged by the plaintiffs in the injunction suit brought in the supreme court of New York to restrain the sale, and that by such proceeding its title as pledgee had become clouded.

It is next insisted that the judgment of the supreme court of New York was void because the plea interposed by the defendant showed that the stock to which the suit in New York related was the stock of a New Jersey corporation, over which the courts of New York could exercise no jurisdiction or control. The rule of law is not disputed that, in a suit commenced and prosecuted upon constructive or substituted service of process, the courts of a state or country may lawfully adjudicate on the title to real or personal property situated within its borders, or upon liens or claims against property which is so situated, provided they are authorized to do so by local statutes. Arndt v. Griggs, 134 U. S. 316, 10 Sup. Ct. 557. It is contended, however, that this rule has no application to the stock of a foreign corporation, that stock certificates are mere evidence of the ownership of stock, and that the stock of a corporation can have no situs outside of the state in which the corporation was created. Speaking technically, it is true that a stock certificate is written evidence of a certain interest in corporate property. The same may be said of notes and bills. They are simply evidence of indebtedness on the part of the individuals or corporations who issue them. But in the business world such obligations or securities are treated as something more than mere muniments of title. They are daily bought and sold like ordinary chattels, they may be hypothecated or pledged, they have an inherent market value, and, while differing in some respects from chattels, they are generally classified as personal property. Allen v. Pegram, 16 Iowa, 163, 173; 1 Cook, Stock, Stockh. & Corp. Law, § 12; Schouler, Pers.

Digitized by Google

Prop. § 482; Bank v. Byram (Ill. Sup.) 22 N. E. 842. Stock certificates may be made the subject-matter of a suit in replevin, and, if they are dealt with wrongfully by the person having the possession thereof, a suit for the conversion of the stock may be maintained, as the present action and many others will serve to demonstrate. McAllister v. Kuhn, 96 U. S. 87, 89. In some states, certificates of stock in a foreign corporation are subject to garnishment (Bank v. Mather [Minn.] 62 N. W. 396), while in other states, owing in a measure to a difference in local laws, they are not subject to such process, or at least stock in a foreign corporation cannot be reached and subjected to the payment of debts merely by notice or process served upon the officers of the corporation while they are within the state in which the attachment proceedings are instituted (Plimpton v. Bigelow, 93 N. Y. 592). It must be admitted, however, that stock in a corporation may be transferred by the owner, without any action on the part of the corporation, so as to vest a good title thereto in the transferee, by a simple transfer of the stock certificate, since it is now well settled that regulations made by a corporation for the transfer of stock on its books are for its own convenience and protection; that they are simply cumulative, and do not operate as a prohibition against other modes of transfer. Bank of Commerce v. Bank of Newport, 27 U. S. App. 486, 11 C. C. A. 484, and 63 Fed. 898; Horton v. Mercer, 36 U. S. App. 234, 18 C. C. A. 18, and 71 Fed. 153; McNeil v. Bank, 46 N. Y. 331, and cases cited. The New York statute under which the suit in New York was instituted authorizes a proceeding on substituted service "where the complainant demands judgment that the defendant be excluded from a vested or contingent interest in, or lien upon, specific real or personal property within the state; or that such an interest or lien in favor of either party be enforced, regulated, defined or limited, or otherwise affecting the title to such property." Code Civ. Proc. N. Y. 1877, § 438. In view of the foregoing considerations, we are of opinion that stock certificates are personal property, within the purview of the foregoing statute, and that when such certificates are held in pledge, or as collateral, within the state, the courts of that state have jurisdiction to establish the existence of a lien thereon, and to enforce the same by directing a sale of the property.

It is urged finally that the judgment of the supreme court of New York is a nullity, because the proper affidavit was not made and filed to authorize an order of publication or service of summons outside of the state of New York, that the filing of such affidavit was jurisdictional, and that the failure to file an affidavit stating all the facts necessary to be stated rendered all subsequent proceedings in the suit void. The order made by the New York court authorizing service outside of the state contains a recital showing that all the facts necessary to warrant the order had been duly proved to the satisfaction of the court by affidavits; and counsel for the defendant company insist that such recitals are in themselves sufficient in a collateral proceeding, although the affidavits upon which the order was obtained were inadvertently omitted from

Digitized by Google

the judgment roll in making up the exemplified copy. We do not find it necessary, however, to notice the latter contention. The case was decided in the trial court on demurrer to the plea, and on a subsequent motion for judgment on the pleadings, after the plaintiffs had declined to take issue with the facts averred in the plea. There is nothing to show that the point last urged by the plaintiffs was raised or considered by the trial court, and in any event, this being a law case, we think we cannot go outside of the facts averred in the plea, and make an examination of exhibits attached to the answer. The plea itself avers that the New York "judgment and decree was rendered upon due and proper notice to the defendants"; also, that "the court then and there had and acquired jurisdiction of the subject-matter of said cause, and jurisdiction over said stock and notes, and of the parties defendant for the purpose of such action." These were material averments which were admitted by the demurrer to the plea, and they preclude us from examining the judgment roll with a view of ascertaining whether it supports the averments of the plea. It is also proper to add that counsel for the defendant company have appended to their brief copies of the affidavits on which the order of publication was obtained in the supreme court of New York, and they clearly satisfy every requirement of the statute, so that in any event there would seem to be no real foundation for the contention that the order of publication was not made upon a proper showing of jurisdictional facts. Finding no error in the record, the judgment of the circuit court must be affirmed, and it is so ordered.

(79 Fed. 238.)

AULTMAN & TAYLOR CO. v. SYME.

(Circuit Court of Appeals, Second Circuit. March 19, 1897.)

LIMITATION OF ACTIONS—NONRESIDENTS—ACTION ON JUDGMENT.

The New York Code of Civil Procedure provides (section 390) that when a cause of action, not involving the title to real property within the state, accrues against a person not then a resident of the state, an action cannot be brought thereon against him in a court of the state, after the expiration of the time limited by the laws of his residence for bringing a like action, except by a resident of the state in certain cases. *Held*, that the words "the laws of his residence" in such statute refer to the residence of the debtor at the time the cause of action accrues, and not at the time the action is brought, and accordingly that when a judgment has been recovered by one nonresident of New York against another, in the state of the latter's residence, and the judgment debtor afterwards removes to New York, no action on the judgment can be maintained against him there by the nonresident creditor, after the expiration of the period of limitation provided by the laws of the state where the judgment was recovered and where the debtor resided at the time of its recovery.

In Error to the Circuit Court of the United States for the Southern District of New York.

This is a writ of error by plaintiff below to review a judgment of the circuit court, Southern district of New York. Upon the trial verdict was directed for the defendant.

Digitized by Google

Wm. H. Blymzer, for plaintiff in error.
Edward F. Brown, for defendant in error.

Before PECKHAM, Circuit Justice, and LACOMBE and SHIPMAN, Circuit Judges.

LACOMBE, Circuit Judge. The action was commenced June 25, 1895, by service of summons on the defendant in the city of New York. Plaintiff, an Ohio corporation, sued upon two judgments obtained by it against defendant in courts of record in Louisiana on January 27, 1885, and February 2, 1885, respectively. Defendant was a resident of the state of Louisiana at the time of the commencement of each of the actions on which said judgments against him were obtained, and was a resident there at the time of the entry of both of said judgments, but about one year thereafter he removed to New York, where he has since resided. He pleaded the statute of limitations in bar of plaintiff's claims.

The New York Code of Civil Procedure provides:

"Sec. 376 (Amended Laws 1877, c. 416; Laws 1894, c. 307). When Satisfaction of Judgment Presumed. A final judgment or decree for a sum of money, or directing the payment of a sum of money, heretofore rendered in a surrogate's court of the state, or heretofore or hereafter rendered in a court of record within the United States, or elsewhere, or hereafter docketed pursuant to the provisions of section thirty hundred and seventeen of this act, is presumed to be paid and satisfied, after the expiration of twenty years from the time when the party recovering it was first entitled to a mandate to enforce it. This presumption is conclusive, except as against a person who, within twenty years from that time, makes a payment or acknowledges an indebtedness of some part of the amount recovered by the judgment or decree, or his heir or personal representative, or a person whom he otherwise represents. Such an acknowledgment must be in writing, and signed by the person to be charged thereby."

"Sec. 390. Where a cause of action which does not involve the title to or possession of real property within the state, accrues against a person who is not then a resident of the state, an action cannot be brought thereon in a court of the state against him or his personal representative, after the expiration of the time limited by the laws of his residence, for bringing a like action, except by a resident of the state, and in one of the following cases: (1) Where the cause of action originally accrued in favor of a resident of the state. (2) Where, before the expiration of the time so limited, the person in whose favor it originally accrued was or became a resident of the state; or the cause of action was assigned to, and thereafter continuously owned by a resident of the state."

The statute of the state of Louisiana (Rev. Civ. Code, art. 3547) provides:

"Art. 3547. All judgments for money, whether rendered within or without the state, shall be prescribed by the lapse of ten years from the rendition of such judgments: provided, however, that any party interested in any judgment may have the same revived at any time before it is prescribed by having a citation issued according to law, to the defendant or his representative, from the court which rendered the judgment, unless the defendant or his representative shows good cause why the judgment should not be revived, and if such defendant be absent, or not represented the court may appoint a curator ad hoc to represent him in the proceedings, upon which curator ad hoc the citation shall be served. Any judgment revived, as above provided, shall continue in full force for ten years from the date of the order of court reviving the same, and any judgment may be revived as often as the party or parties interested may desire."

Digitized by Google

Neither the plaintiff nor any party interested had taken any action or legal proceedings whatsoever to have said judgments revived. The New York Code of Civil Procedure further provides:

"Sec. 1913. Action upon Judgment Regulated. Except in a case where it is otherwise specially prescribed in this act, an action upon a judgment for a sum of money, rendered in a court of record of the state, cannot be maintained, between the original parties to the judgment, unless either: (1) It was rendered against the defendant by default, for want of an appearance, or pleading, and the summons was served upon him, otherwise than personally; or (2) the court in which the action is brought has previously made an order granting leave to bring it. Notice of the application for such an order must be given to the adverse party, or the person proposed to be made the adverse party, personally, unless it satisfactorily appears to the court, that personal notice cannot be given, with due diligence; in which case, notice may be given in such a manner as the court directs."

It would seem, therefore, that upon these judgments obtained in Louisiana, not being rendered in a court of record of the state of New York, action could have been commenced forthwith against the defendant in this state if found here. "As a general rule, a party has a right to sue on any cause of action which he holds. Any statutory exception to that right must be distinctly expressed. The language of the section above cited (section 71, Old Code Civ. Proc.) does not distinctly or by implication include judgments recovered in courts other than of this state. Nor do we think the policy of the statute applies to any others." Vulcanite Co. v. Frisselle, 22 Hun, 174; Morton v. Palmer (Sup.) 14 N. Y. Supp. 912. The cause of action against defendant on these two judgments, therefore, accrued as soon as they were entered.

The sole question presented here is one of construction of section 390, supra, viz.: Do the words "expiration of the time limited by the laws of his residence" refer to the laws of the state where he resides when the action is brought or of the state where he resided when the cause of action accrued? The answer to such a question should be looked for in the decisions of this state. The section makes its first appearance in the Code of Civil Procedure. The Old Code contained no such provision. Until section 390 took effect, the statute of limitations of another state was no bar in this state, although the cause of action accrued in the other state and the parties were residents thereof until the statute had run. The manifest intention of the section was to provide that except where the interests of residents of this state were believed to require a different rule, which is embodied in the exceptions, our courts should not be used to enable a nonresident to commence an action here, when the cause of action accrued elsewhere, and has been completely barred by the laws of the parties' common domicile. Throop's notes to Code Civ. Proc. p. 160. The plaintiff refers to Beer v. Simpson, 65 Hun, 20, 19 N. Y. Supp. 578, but in that case it is stated in the opinion that it did not appear whether, when the Colorado judgment there sued on was entered, defendant was a resident of Colorado or of New York. Therefore, since he was a resident of New York when the action was brought, the statute of limitations of the latter state only applied. "It does not appear," says the court, "that the conditions, as to residence of either of the parties, * * * were such as to bring the case within section 390."

Digitized by Google

The defendant refers to Howe v. Welch, which is reported in its successive stages in 2 How. Prac. (N. S.) 507, 3 How. Prac. (N. S.) 465, and 3 N. Y. St. Rep. 577. The final decision is by the general term of the New York common pleas, which holds that "the sole question to be tried was whether or not, in a court of the state of Iowa, an action against the defendant upon the note would have been barred by the statute of limitations of Iowa." And the opinion concludes: "If the debt were barred by the statute of Iowa, no action could be maintained in a court of this state; but, if the debt were not barred in Iowa, the statute of limitations of the state of New York might nevertheless been a bar in this action." In that case the cause of action accrued to one Gregg in February, 1869. Gregg was a resident of Ohio. He, and his Ohio executors after his death, held it till August, 1884, when the latter assigned to plaintiff, a resident of New York, who began suit in September, 1884. Defendant was a resident of Missouri when the cause of action accrued. Three years afterwards he removed to Iowa, where he resided over 10 years, and then removed to New York. In Goldberg v. Lippmann (City Ct. N. Y.) 25 N. Y. Supp. 1003, action was brought upon a note made by defendant to the order of plaintiff, and dated, "Denver, August 27, 1883." It does not appear whether or not defendant was then a resident of Denver, but when sued on the note in November, 1892, he averred a continuous residence in New York for more than six years prior to the commencement of the suit. The trial court refused to let him make proof of this averment, ruling that the law of Colorado, and not of New York, was applicable. It was sought to sustain this ruling, on appeal to the general term of the city court, by reference to section 390; but that court reversed, holding that the section "applies to a nonresident defendant sued here to enable him to avail of his residence in the foreign state during the period of limitation there, as a defense in the action against him here." So far as we have been able to find, there is no adjudication in the state courts directly in point, and we are therefore left to find the meaning of the section in the language used. The use of the phrase "not then a resident of the [this] state" seems plainly to import that the person referred to thereafter becomes such resident. If this be so, and the phrase "laws of his residence" be construed to refer to the laws of such subsequent residence only, the enactment would be superfluous. As pointed out in Howe v. Welch, supra, he could avail of the statutes of this state by virtue of his residence here without any such provision. It seems to us very clear that the words "laws of his residence" apply to the residence already referred to, namely, his residence when the cause of action accrued. No reasons of public policy seem to call for any other interpretation. The rights of resident creditors are fully safeguarded by the exceptions, and there is nothing extraordinary or objectionable in a provision that when a cause of action arises between nonresidents of this state, and the laws of the state where it arose give it but a limited lifetime, which has expired, the removal of one of the parties into this state, to become a resident thereof, shall not operate to revive the cause of action in favor of the nonresident. The judgment of the circuit court is affirmed.

Digitized by Google

(79 Fed. 241.)

KRALL v. UNITED STATES.

(Circuit Court of Appeals, Ninth Circuit. February 23, 1897.)

No. 320.

WATERS AND WATER COURSES ON PUBLIC LANDS—APPROPRIATION BY MINERS ETC.—GOVERNMENT RESERVATIONS.

Miners and others, in the region where the artificial use of water is an absolute necessity, have the right, though not riparian proprietors, to appropriate for mining, irrigation, etc., the waters of nonnavigable streams flowing through the public lands, so far as not already appropriated by others; and the previous establishment of a government reservation below the point of appropriation does not affect the right, except so far as the waters of the stream have been previously appropriated for the use of such reservation. Gilbert, Circuit Judge, dissenting.

Appeal from the Circuit Court of the United States for the District of Idaho.

Silas W. Moody, for appellant.
Jas. H. Forney, U. S. Atty.

Before GILBERT and ROSS, Circuit Judges, and HAWLEY, District Judge.

ROSS, Circuit Judge. The decision of the court below was in large measure based upon the idea that the government, as the sovereign power, has, in respect to the waters of nonnavigable streams upon the public lands, a superior right to any which citizens can acquire. "Save such Indian title to the public lands as it chooses to recognize," said the court below in its opinion, "it has such absolute title to them and the waters therein that it may do with them as it will, including their withdrawal from all claim or appropriation by the citizen, when not already granted or conveyed." That the government, in the exercise of its sovereign power, may condemn for its uses the private property of the citizen, no one will deny; but we cannot at all agree that it can withdraw or take, without compensation, any right to the waters of a stream upon the public lands acquired by the citizen under its laws or by its sanction. By the ninth section of the act of July 26, 1866, congress provided that:

"Whenever by priority of possession, rights to the use of water for mining, agricultural, manufacturing, or other purposes, have vested and accrued, and the same are recognized and acknowledged by the local customs, laws, and the decisions of courts, the possessors and owners of such vested rights shall be maintained and protected in the same; and the right of way for the construction of ditches and canals for the purposes aforesaid is hereby acknowledged and confirmed." 14 Stat. 253.

But prior to the enactment of this statute it was the established doctrine of the supreme court of the United States—

"That rights of miners who had taken possession of mines and worked and developed them, and the rights of persons who had constructed canals and ditches to be used in mining operations and for purposes of agricultural irri-

Digitized by Google

gation, in the region where such artificial use of water was an absolute necessity, are rights which the government had, by its conduct, recognized and encouraged, and was bound to protect, before the passage of the act of 1866."

It was so expressly held in the case of Broder v. Water Co., 101 U. S. 274, 276. And it was in that case further held that the act of July 26, 1866, was "rather a voluntary recognition of a pre-existing right of possession, constituting a valid claim to its continued use, than the establishment of a new one." That doctrine of prior appropriation in respect to the waters upon the public lands was in full force when, according to the record in the case at bar, the plaintiff in error went upon the public lands and appropriated, for the purpose of irrigating his own land, a certain amount of the water of Cottonwood creek, there flowing. His appropriation was, of course, subject to the prior appropriation and use of the waters of the stream made by the government officials for the purposes of the military post reservation, which consisted of 640 acres of land, and was located on the stream in question below the point of the appellant's diversion. The military reservation was established by presidential proclamation in January, 1868,—subsequent not only to the time when the government, by its conduct in recognizing and encouraging the local custom of appropriating the waters of the nonnavigable streams upon the public lands for agricultural and other useful purposes, had become bound to recognize and protect a right so acquired, but subsequent, also, to the passage of the act of congress of July 26, 1866, making statutory recognition of that right, and confirming the holder in its continued use. The creation of the reservation for military post purposes did not destroy or in any way affect the doctrine of appropriation thus established by the government in respect to the waters of the nonnavigable streams upon the public lands. They continued subject to appropriation for any useful purpose. The appropriation of a part of those waters for the uses of the military post secured it in the use of the portion so appropriated, but it did not take from others the right to make such appropriation above the reservation as would not interfere with its prior appropriation. In Sturr v. Beck, 133 U. S. 541, 10 Sup. Ct. 350, relied on by the court below, the appropriator entered upon the land which the grantor of the plaintiff in that suit had previously entered in the land office, and to which he had acquired a vested right, and took the water there flowing, which the court held was part and parcel of the entryman's land, and which the appropriator could not take. We do not think the supreme court by that case intended to do away with the doctrine of prior appropriation as previously recognized by its decisions and by the statute of July 26, 1866; for in its opinion in Sturr v. Beck it expressly referred to that statute and to the cases of Atchison v. Peterson, 20 Wall. 507, 512, and Broder v. Water Co., 101 U. S. 274, 276, the doctrine of which cases and of Basey v. Gallagher, 20 Wall. 682, in our opinion, requires a reversal of the judgment of the court below. If by the decision in Sturr v. Beck the court had intended to overrule its former decisions, it does not seem to us it would have cited them without disapproval. The judgment is

Digitized by Google

reversed, and the cause remanded for further proceedings in accordance with the views here expressed.

GILBERT, Circuit Judge (dissenting). The appellant and the appellee sustain to one another neither the relation of riparian proprietors nor that of locators of water rights. The appellant is not a riparian owner. He has not acquired title from the United States to any lands adjacent to Cottonwood creek. He has gone upon the public land, and has diverted from the stream, through his ditch, a quantity of water, which he has conveyed thereby to other lands. By this act he could acquire no rights against the United States. What rights he may have acquired as against other appropriators of the waters of the same creek, it is not necessary to consider. The United States have, to a certain extent, recognized the rights to water by appropriation which were conferred under local laws, which rights are in some respect a departure from the doctrine of the common law respecting riparian owners, in cases where such appropriators had no title to the soil, but had applied the waters of streams upon public lands to a useful purpose; and the courts, in construing such laws, have generally decided that the first appropriator might divert water from the stream to any useful purpose, without obligation to return it to the stream. It was for the protection of rights upon the public lands, such as these, that had accrued without claim to the title or entry under the land laws, that the act of 1866, section 9 of which appears in the Revised Statutes as section 2339, was enacted. But there is nothing in the statute, nor in any decision of the courts construing the same, to uphold the doctrine that an appropriator of water upon the public lands of the United States may, by virtue of such appropriation or the continued use of the water, acquire rights therein adverse to the United States. It needs no citation of authorities to sustain the proposition that, at the time when the land included within the military reservation was set apart by the government for a post, the United States was the sole proprietor of the land, and of the water of Cottonwood creek, which flowed through it. In so setting apart and reserving the land, there was undoubtedly included in the reservation the same right to the waters of the stream which traversed it, and the same right to have the stream flow as it was accustomed to flow, undiminished, that would have been conveyed to any grantee of the government in case of a grant of these lands. The right of such a grantee has been defined by the supreme court in the case of Sturr v. Beck, 133 U. S. 541, 10 Sup. Ct. 350. In that case a homestead entryman had entered lands over which the waters of a creek flowed in its natural channel. Subsequent to his entry, and prior to his conveyance of the homestead to Beck, Sturr went upon the homestead, and located a water right under the laws of Dakota, and constructed a ditch, and diverted the waters of the creek to his own adjacent land. It was contended on behalf of Sturr that the doctrine of the prior appropriation of water on the public land, and its beneficial use, protected him from interference as against the grantee of the

Digitized by Google

homestead entryman; but the court held that the latter obtained a vested right to have the creek flow in its natural channel, by virtue of the homestead entry and his possession thereunder, and that the filing of a homestead entry upon land across which a stream of water runs in its natural channel, before a right or claim has vested in another to divert it therefrom, confers the right to have the stream continue to run in that channel, without diversion. The doctrine of that decision is distinct. It announces the general principles applicable to the diversion of water from a stream upon the public lands after a homestead right has attached below upon the same stream. The fact that the point of diversion was upon the homestead itself was not taken into account. The law is announced irrespective of that fact, and the case is decided as one purely of the invasion of the water rights acquired by the homestead settler, and not as a case of trespass upon the homestead itself. I find nothing in the decision inconsistent with the three prior decisions of the same court which were cited in the opinion with approval. The first of those cases is Atchison v. Peterson, 20 Wall. 507. In that case it was said that on the mineral lands of the public domain the doctrines of the common law concerning the rights of riparian proprietors to the use of running waters are modified, and that "the first appropriator who subjects the property to use, or takes the necessary steps for that purpose, is regarded, as against the government, as the source of title, in all controversies relating to the property"; and the court decided that, in controversies between the first appropriator and parties subsequently claiming the water, the question for determination is whether his use and enjoyment of the water to the extent of his original appropriation has been impaired by the others. In Basey v. Gallagher, 20 Wall. 670, the decision goes no further than to hold that in the Pacific states and territories a right to running water on the public lands of the United States for the purpose of irrigation may be acquired by prior appropriation, as against parties not having the title of the government. In the opinion it was said:

"Neither party has any title from the United States. No question as to the right of prior appropriators can therefore arise. It will be time enough to consider those rights when either of the parties has obtained the patent of the government."

The event referred to in this quotation from the opinion did not occur until the case of Sturr v. Beck. In that case the court was called upon to consider the rights of one who had obtained a patent of the government, and I know of no way to explain away the plain import of the decision, however much its doctrine may be opposed to the trend of the decisions of the state courts in the Pacific states. In the third case (Broder v. Water Co., 101 U. S. 274) it was held that a water right and canal upon the public lands, acquired and constructed in 1853, was by the act of July 26, 1866, made paramount to the right of one who thereafter acquired the title to the lands, whether he obtained title by pre-emption, or under the grant to the Central Pacific Railroad Company made on July 2, 1864, in which grant there was confirmed to the owners of

Digitized by Google

such canals a pre-existing right. Recurring to the decision in Sturr v. Beck, it may be said that, if the rights of a grantee from the United States under the public land laws are as there defined, it necessarily follows that the reservation to its own use by the United States of public land which is traversed by a running stream, before any rights have accrued to divert the water from its natural channel, includes the reservation of the water, and the right to have it flow as it was accustomed to flow, and that if the appellant in this case acquired, by his appropriation of the waters from the creek, and the diversion thereof, and the continued use of the same, any right to the water, it is not adverse to the rights of the United States, and cannot affect the right of the government to demand the unrestricted flow of the water through the reservation, as it flowed at the time when it was so set apart for a military post. As against this reservation of property and the incidents thereto, the appellant has acquired no rights whatever. I think the decree, therefore, should be affirmed.

(79 Fed. 245.)

PHOENIX INS. CO. v. WARTTEMBERG.

(Circuit Court of Appeals, Ninth Circuit. February 23, 1897.)

FIRE INSURANCE — MISREPRESENTATIONS IN APPLICATION — INTERPRETATION OF FACTS BY AGENT.

When an applicant for insurance has told the soliciting agent of the insurance company the facts in relation to an incumbrance on the property it is proposed to insure, and the agent, asserting that such facts are not material, has inserted in the application which is signed by the applicant a statement that there is no incumbrance on the property, but there is nothing to show that the company would have declined the risk if it had known of the incumbrance, nor that either the insured or the agent perpetrated any fraud on the company, the insurance company, in case of a loss, is liable upon a policy issued upon such application, notwithstanding it contains a stipulation that any false answer in the application should render it void. Insurance Co. v. Fletcher, 6 Sup. Ct. 837, 117 U. S. 519, distinguished.

In Error to the Circuit Court of the United States for the Northern Division of the District of Idaho.

Forney, Smith & Moore and James H. Forney, for plaintiff in error.
Eugene O'Neill and James E. Babb, for defendant in error.

Before GILBERT and ROSS, Circuit Judges, and HAWLEY, District Judge.

GILBERT, Circuit Judge. The defendant in error was the plaintiff in an action which was brought against the Phœnix Insurance Company to recover, upon a policy of fire insurance, the loss and damage by fire to the property of Peter Thompson. On October 23, 1893, Peter Thompson made a written application for insurance to the amount of $3,500, upon his barn, hay, grain header, binder, and other farming implements, with the loss, if any, payable to C. Warttemberg, mortgagee. One of the defenses made by the insurance

Digitized by Google

company to the action was that the insured, in his written application, had falsely warranted that the property upon which the insurance was sought was not incumbered. The insurance was obtained through one R. D. McConnell an agent of the insurance company residing at Moscow, Idaho, and, when the policy was delivered to the insured, it bore the indorsement, "McConnell & Cobbs, Agents." The application contained the following:

"It is expressly understood and agreed that the valuation of all the property herein described is made by the applicant, and, if this blank be filled out by the agent, it is done at dictation of applicant, and every statement herein contained is to be deemed his own. This company will be bound by no statement made to or by the agent, unless embodied in writing herein."

The policy contained also the following:

"This insurance is based upon the representation contained in the assured's application of even number herewith, on file in the company's office in San Francisco, each and every statement of which is hereby specifically made and warranted and a part hereof; and it is agreed that, if any false statements are made in said application, this policy shall be void."

And the following:

"No agent or employé of this company, or any other person or persons, have power or authority to waive or alter any of the terms or conditions of this policy, except only the general agent at San Francisco. Any waiver or alteration by them must be in writing."

At the trial, the plaintiff, in answer to the question, "What, if any, answer was made to this question in the application, 'Is the personal property incumbered? If so, in what manner and what amount?'" testified as follows:

"A. I told him it was mortgaged to John P. Volmer, First National Bank of Lewiston, for $1,000. Q. State the whole conversation at that time. A. And he says, 'Are you going to pay it?' I told him I was going to pay it off right away, and he said that did not make any material difference if I was going to pay it off right away, and he would write the word, 'No.'"

It was proven that at the time the insurance was applied for, on October 23, 1893, there was upon a portion of the personal property a mortgage for $1,000. On October 27th the insured paid $500 on account of the mortgage debt, and on November 20th made a further payment of $300, leaving about $300 still due on principal and interest at the time of the fire, which occurred on December 21, 1893. The insured testified, further, that the agent of the insurance company came to his place, and wanted to insure his property, and that, when he finally agreed to insure, the agent "made out an application and insured the property"; that the application was not read to him at the time; that he had dealings with no other person than the agent with reference to the insurance; and that the agent at the time claimed to represent the Phœnix Insurance Company of Brooklyn; and that the policy was sent to him by the agent. There is no evidence that the agent gave any information to the insured concerning the limitations of his agency or the nature thereof. It appeared, upon his own testimony, that the agent had authority to write commercial risks for the Phœnix Insurance Company in towns in Idaho, such as Moscow, Kendrick, Leland, and other places, but that he had

Digitized by Google

no authority to write insurance on farm risks; and that he was required to forward all applications on farm risks for the company's inspection and acceptance. The jury returned a verdict for the plaintiff for $1,800. Under the instructions of the court, they found by their verdict that the conversation which the plaintiff alleged was had between him and the agent occurred as by him detailed. On the submission of the case to the jury, the plaintiff in error requested the court to instruct the jury to return a verdict for the defendant. The request was denied, and an exception was allowed, and thereon is based the principal assignment of error on which the case is presented in this court.

The plaintiff in error cites the case of Insurance Co. v. Fletcher, 117 U. S. 519, 6 Sup. Ct. 837, and urges that, under its authority, we are compelled to reverse the judgment of the trial court. In that case the applicant for life insurance made his application in St. Louis, to an agent of a New York insurance company. He made answers to the questions propounded to him by the agent, which, if correctly written down, would have made a material difference in the nature of the risk. The agent, without his knowledge, wrote down false answers, concealing the truth. The applicant signed the application without reading it, and the agent transmitted it to the company. Thereupon a policy was issued which contained the express condition that the answers in the application were a part of the policy, and that no statement made to the agent not contained in the application should be binding on the company. A copy of the answers, with these conditions conspicuously printed upon it, accompanied the policy. It was held that the policy was void. Mr. Justice Field, in delivering the opinion of the court, said:

"It is conceded that the statements and representations contained in the answers, as written, of the assured, to the questions propounded to him in his application, respecting his past and present health, were material to the risk to be assumed by the company, and that the insurance was made upon the face of them, and upon his agreement accompanying them that, if they were false in any respect, the policy to be issued upon them should be void. It is sought to meet and overcome the force of this conceded fact by proof that he never made the statements and representations to which his name is signed; that he truthfully answered those questions; that false answers written by an agent of the company were inserted in place of those actually given, and were forwarded with the application to the home office. * * * It was his duty to read the application he signed. He knew that upon it the policy would be issued, if issued at all. It would introduce great uncertainty in all business transactions if a party making written proposals for a contract, with representations to induce its execution, should be allowed to show, after it had been obtained, that he did not know the contents of his proposals, and to enforce it, notwithstanding their falsity as to matters essential to its obligation and validity. Contracts could not be made, or business fairly conducted, if such a rule should prevail; and there is no reason why it should be applied merely to contracts of insurance. There is nothing in their nature which distinguishes them in this particular from others."

The court proceeded to distinguish the case from Insurance Co. v. Wilkinson, 13 Wall. 222, and from Insurance Co. v. Mahone, 21 Wall. 152, and said:

"In neither of these cases was any limitation upon the power of the agent brought to the notice of the assured. * * * Here the power of the agent was

Digitized by Google

limited, and notice of such limitation given by being embodied in the application which the assured was required to make and sign, and which, as we have stated, he must be presumed to have read. He is therefore bound by its statements."

It is contended by the defendant in error that the doctrine of the Fletcher Case has been modified by subsequent decisions of the supreme court, and we are referred to Insurance Co. v. Chamberlain, 132 U. S. 304, 10 Sup. Ct. 87, in support of that proposition. That was a case in its facts and principles essentially identical with the case now before the court. The applicant for insurance stated in his application, in answer to the question whether he had other insurance, that he had certain certificates of membership in co-operative societies. The agent informed him that he did not consider such certificates insurance, and gave his reasons for so stating, and wrote the answer "No" in the application. But the decision of the court involved no modification of the doctrine of the Fletcher Case. It was based expressly upon the statute of Iowa, in which state the contract of insurance had been made, providing that "any person who shall hereafter solicit insurance, or procure applications therefor, shall be held to be the soliciting agent of the insurance company or association issuing the policy on such application, or on a renewal thereof, anything in the application or policy to the contrary notwithstanding." The court held that an agent procuring an application for life insurance in that state became, by force of the statute, the agent of the company, and that if he filled up the application, or made representations, or gave advice as to the character of the answers to be given by the applicant, his acts in these respects were the acts of the insurer. There is no intimation in the opinion of what would have been the ruling of the court in the absence of a statute. In Idaho, unfortunately, there is no statute similar to that of Iowa. We find no other decision of the supreme court subsequent to the Fletcher Case which in any way modifies that case. But we are not disposed to apply the doctrine of that case further than to the state of facts under which the decision was rendered. The controlling fact in that case was that fraud had been perpetrated upon the insurance company by its agent, whether with or without the connivance of the assured. The fraud consisted in the concealment of facts by the agent, who wrote false answers to the questions which he propounded to the applicant. In the opinion it is said that, if the company had been aware of the true state of facts, the risk would probably not have been assumed. There is nothing in the record in the case now before us to show that the insurance company would have declined the risk if it had been aware of the fact that a portion of the property on which insurance was sought was under a temporary incumbrance, which was to be shortly paid off by the insured. Nor is there anything in the record to show that either the insured or the agent perpetrated fraud upon the insurance company. The applicant truthfully stated the facts to the agent, and the latter advised him concerning the force of those facts, and placed a construction upon them by writing the answer as he did in the printed application. The clause of the contract of insurance by the force of which

Digitized by Google

it is contended that the misstatement contained in the application amounts to a breach of warranty is this: "This company will be bound by no statement made to or by the agent unless embodied in writing herein;" and the stipulation of the policy to the effect that any false statement in the application should render the policy void. It is not stated, either in the policy or in the application or in the evidence, that the agent was not the agent of the insurance company. The jury have found, in effect, that the insured stated the facts concerning the incumbrance on his property truthfully and in good faith, and that an answer different from that which he gave was written in the application by the agent, and assented to by the insured, in consequence of his trust and confidence in the superior knowledge and information of the agent. It appears also that the insured, in good faith, was proceeding to pay off, and had paid off, the greater portion of the incumbrance before the fire occurred, which was but two months after the date of the application. It would be a harsh doctrine, indeed, to hold that insurance companies shall have the opportunity of perpetrating such wrong and injustice as would result from the application of the ruling in the Fletcher Case to the facts presented in the present case. It is well known that insurance is usually effected, especially upon farm property, by agents who travel through the country supplied with the printed blanks of the insurance companies for the purpose of taking applications, and forwarding them to their home offices. The applicant for insurance naturally relies upon the statements of him whose business it is to procure insurance, and the agent should not have it in his power, while obtaining premiums from the insured for the enrichment of his company, to absolve the latter from liability on its policies, provided he can, either honestly or otherwise, induce the applicant to adopt in his application such construction as the agent may persuade him to believe is proper to be placed upon the facts which he has honestly detailed.

The judgment will be affirmed, with costs to the defendant in error.

(79 Fed. 250.)

SPANG v. RAINEY.

(Circuit Court of Appeals, Second Circuit. February 23, 1897.)

1. SALES—MEANING OF "GENERAL ADVANCE IN MARKET PRICE."

Under a contract for the sale of coke at 90 cents per ton, "said price to continue until there may be a general advance in the market price of coke, then and in that event the price to be the lowest rate at which coke is sold to the larger and better consumers of coke in the market," the expression "general advance in the market price of coke," must be regarded as meaning a general advance over the 90 cents per ton named in the contract, and not a general advance over what was the market price of coke at the time the contract was made.

2. SAME.

In determining whether there has been "a general advance in the market price of coke," within the meaning of the contract, proper regard must be given to all the different ways in which coke is bought and sold, and the advance, to constitute a general one, must be such according to

Digitized by Google

the trade acceptation, and the general understanding of buyers and sellers, and not a special advance by a limited number of dealers, or by a combination taking advantage of the necessities of a limited class of customers.

8. SAME—MEANING OF "LOWEST RATE TO LARGER AND BETTER CONSUMERS."
The obligation to pay plaintiff the lowest rate paid by the larger and better consumers does not mean absolutely the lowest rates paid by any consumer, but the lowest rates prevailing among such consumers in general.

This is a writ of error to the circuit court, Southern district of New York, to review a judgment of that court entered April 21, 1896, against the plaintiff in error, who was defendant below. The judgment was entered upon the verdict of a jury in favor of defendant in error, who was plaintiff below.

John E. Parsons, for plaintiff in error.

Wm. B. Hornblower, for defendant in error.

Before LACOMBE and SHIPMAN, Circuit Judges.

LACOMBE, Circuit Judge. The defendant was one of several partners who owned and operated a furnace under the name of the Isabella Furnace Company, and the action was brought to recover the price of coke delivered by the plaintiff under the following contract:

"Memorandum of agreement made this third day of May, eighteen hundred ninety-four, and to continue until the third day of February, eighteen hundred ninety-five, by and between W. J. Rainey, of Cleveland, Ohio, and Isabella Furnace Co., of Pittsburgh, Penna.: The said W. J. Rainey bargains and agrees to supply the said Isabella Furnace Co. coke to the extent of about fifteen car loads daily, at the rate of ninety (90) cents per ton of 2,000 pounds, railroad weight, at the mines in the Connellsville region,—good, merchantable coke, equal to the best made by the said W. J. Rainey. Said price to continue until there may be a general advance in the market price of coke. Then and in that event the price shall be the lowest rate at which coke is sold to the larger and better consumers of coke in the market. Settlements to be made in cash, say the 25th of the month following previous month's delivery. This contract to be held in abeyance in the event of strikes, or the inability of W. J. Rainey to produce coke.

"W. J. Rainey, per W. T. Rainey.
"Isabella Furnace Co."

There was no dispute as to the quantity delivered under this contract. The jury found the price payable therefor to be 90 cents up to May 10, 1894, $2.50 from that date to and including June 30, 1894, and $1.50 from that date to and including August 4, 1894, the date of the last delivery. The matters in dispute upon the proofs were whether there had been a "general advance in the market price of coke," within the meaning of the contract, and, if so, what, at the time of the several deliveries, was the "lowest rate at which coke was sold to the larger and better consumers." With the weight of the evidence bearing upon these points this court has no concern. That is a matter for the consideration of the trial judge upon motion for a new trial, and his disposition of such motion is not reviewable by writ of error. The only questions to be determined here are whether there was any evidence to go to the jury sustaining the plaintiff's contention; whether the case was submitted to the jury with correct instructions; and whether there was any harmful error in the admission or rejection of evidence.

Digitized by Google

It is assigned as error that the court refused to instruct the jury that by the expression, "a general advance in the market price of coke," as used in the contract, is meant a general advance over what was the market price of coke at the time the contract was made, on May 3, 1894, and not simply over the 90 cents per ton named in the contract. We see no reason for giving any such forced and awkward construction to the instrument. The contract evidently provides for a price initially of 90 cents, but which is to advance or recede (not in any event below 90 cents) so as to conform to the general market price, i. e. to the lowest market rate paid by the larger and better consumers. There was abundant evidence that, subsequently to the making of the contract, coke was bought by the larger and better consumers at prices above 90 cents, and as high as those found by the jury. To understand the theory upon which defendant contends that these purchases should not have been considered by the jury, it is necessary briefly to state some peculiarities of the business which were disclosed by the testimony. The great bulk of the output of coke from the region in question was supplied by three concerns,—the H. C. Frick Company, the McClure Company, and the plaintiff. There were some smaller concerns which produced it in limited quantities. The coke is bought by those who operate blast furnaces, and is absolutely necessary to the running of such furnaces. Since the assurance of a steady supply is important to the furnace men, they undertake to secure it in most cases by making contracts with the coke producers for deliveries of specified quantities during some specified time,—either a year or some fraction of a year. The price is definitely fixed in these contracts at some uniform rate, which presumably is what the seller thinks he can safely sell at, averaging any expected differences in the cost of production during the period. These are spoken of in the record as "time sales" or "time contracts." If, however, for any reason, a user of coke needs more than he can obtain under his time contracts, either because he is using more than he has provided for, or because he is not receiving all he bargained for under such contracts, he goes into the market and buys what he needs for immediate delivery, or for delivery during some short future period. How much he will thus buy depends upon his needs,—that is, upon the amount of shortage he has to make up,—and no doubt, to some extent, upon the price he may have to pay for it. These sales are referred to in the record as "spot sales" or "emergency sales." The time contracts contain a strike clause similar to that which is found in the contract in suit, so that purchasers of coke can never be sure that they will receive all they have provided for under their time contracts at the price fixed therein. They are liable at any time, in the event of a strike, to be compelled to pick up their coke where they can, and at prices regulated by the supply and demand. At the time the contract in suit was made, a strike was on, and its effect began to be felt immediately. During the month of May the H. C. Frick Company was able to produce only 2,557 car loads of coke, as against an ordinary running capacity of 19,000 to 22,000 car loads. Its condition improved subsequently, but even in the month of July it was able to produce barely 50 per cent. of its regular output. The consequence was

Digitized by Google

that although the blast furnaces which it had contracted to supply were short of coke, were demanding coke, and in some cases had to stop business because they did not have coke, the Frick Company was obliged to avail of the strike clause in its existing contracts, not being able to carry them out except as it was protected by such clause. It disposed of the coke it did produce by distributing it around among such of its regular time customers as, for some sufficient reason, it chose to favor, at the price it had agreed to charge. The strike greatly reduced the output of the McClure Company. It also supplied some little coke under time contracts at a fixed rate, and, in the case of one time contract, at market rates, under which deliveries were made at $1.10 and $1.25. But apparently it made no other sales. Except for the sales, or rather the deliveries, under time contracts of the H. C. Frick Company, and these transactions of the McClure Company, the testimony as to sales and prices during the period in question relates to so-called spot or emergency sales. So large is the plant of the H. C. Frick that, despite the great reduction in its output, its deliveries during that period exceeded those of all other producers put together. This circumstance, however, would not justify the request to charge which the circuit judge refused, viz. that the jury cannot adopt any higher rate than that at which the H. C. Frick Company sold to its customers during said period. Other considerations than such as usually fix the price of a commodity, viz. the supply and the demand, may well have operated to induce the continuance of deliveries under these contracts at less than general market price, just as they undoubtedly did induce the favoring of some of its customers by letting them have coke when none was delivered to others. Upon all the evidence as to market price, the court charged most favorably to defendant, as will be seen from the following excerpts:

"Now, looking at this contract as a whole, what was the apparent intention of the parties? Mr. Rainey had the right at any time to cease supplying coke, in the event of a strike; but certainly it can hardly be believed that it was the intention to permit Mr. Rainey, instead of availing himself of that condition, to produce a market price himself, and compel the defendants to accede to it. It was intended—and the words used are significant—that, if there was any 'general advance' in the market price, then that should be the basis of the further price to be paid by the defendants. Not a special advance made by Mr. Rainey, or by any combination, if you please, who, by reason of exceptional circumstances, might temporarily create a corner in the market, or take advantage of the necessities of a limited class of customers; but it was to be a general advance in the market, according to the trade acceptation and the general understanding of buyers and sellers. The first question for you to determine in this case is whether there was this advance. The plaintiff insists that there was a general advance, commencing on the 10th of May; and upon that theory he insists that he is entitled to recover $3 a ton for the coke during the months of May and June, and $1.50 for the coke in July and the rest of the time through which the deliveries were continued. It is incumbent upon the plaintiff to establish by a fair preponderance of evidence—the burden of proof being upon him—that there was a general advance in the market price of coke, within the meaning of the contract, as I have explained that meaning to you. That is the fundamental proposition which it is incumbent upon him to establish. The first issue, therefore, for you to determine, is whether there was a general advance,—not an advance created merely by Mr. Rainey, or created by a limited number of dealers, neither an advance in which all sellers and buyers participated, but a general advance, in the acceptation and under-

Digitized by Google

standing of dealers in coke. I shall not advert in any detail to the evidence on that question. Mr. Rainey has given evidence as to many transactions of his own, some of which were with large consumers, and has produced the evidence of other persons in support of the theory that this advance took place. On the other hand, the defendants have produced their witnesses. Perhaps I ought to refer to the testimony of Mr. Magee, as he represented the largest coke producer in the country [the H. C. Frick Company] during the life of this contract. Mr. Magee testified that there was no advance. In June, according to his testimony, the production of his concern increased considerably, and it increased more in July, but the concern could not fill its contracts. It was not under obligation to fill its contracts, because, as seems to be the case with all these contracts, there was a strike clause inserted in them. But nevertheless, according to his testimony, his company did go on distributing coke as best it could among its customers, and renewing contracts made several months before, some of which expired in June and some in July,—renewing these contracts on the basis of a dollar per ton for coke. I shall not refer to the other testimony on the part of the defendants. I leave it to you, as a question of fact, to say whether, within the meaning of the contract as I have explained it to you, there was a general advance in the market price of coke during the life of the contract between the parties. If there was, then you reach the second question in the case. If there was a general advance in the market price, then under this contract the defendants were obligated to pay the plaintiff the lowest rates paid by the larger and better consumers. That does not mean absolutely the lowest rates paid by any consumer, but it means the lowest rates prevailing among such consumers in general."

The defendant assigns it as error that the court charged as above:

"That in determining the market price the jury must consider what consumers were willing to pay in the regular course of business. A general advance in price means a state of demand and supply which leads the larger and better consumers in general to pay the advance."

It is contended that this clear and ordinarily accurate statement of what constitutes a "market price" was improper in this case, because it did not exclude all spot sales from the consideration of the jury. Upon the theory that spot sales were to be wholly disregarded, defendants asked the court to instruct the jury that there was no general advance, or that the "lowest rate," under the contract could not exceed one dollar per ton, which was the rate at which the Frick Company sold to its customers. Defendant also requested the court to charge:

"That, in considering this question as to whether there was or was not a general advance in the market price of coke, the jury are not to adopt as a criterion of market price the high prices obtained by the plaintiff at spot sales or emergency sales of coke, nor the increased cost to the plaintiff or others of producing coke."

The court modified this request, and instructed the jury:

"That, in considering the question whether there was or was not a general advance in the market price, the jury are not necessarily to adopt as a criterion of market price the high prices obtained by the plaintiff at spot sales or emergency sales, or the increased cost of producing the coke, but the jury are to take into consideration all the facts which have been recited."

To which defendant excepted. Defendant's theory was further advanced in a request which the court refused to charge:

"That the jury are to bear in mind that the contract in this case is a contract running for nine months, and they must look especially to see whether there was any advance in prices in like contracts, and, if so, how much."

Digitized by Google

We find nothing in the contract which will warrant the construction defendant seeks to put upon it. It refers to "a general advance in the market price of coke," not an advance exclusively in one-year coke, or in nine-months coke, or in six-months, or in three or two or one, or in spot. Proper consideration may be given to all the different ways in which coke is bought and sold, and the determination what the general market price is at any particular time cannot be properly arrived at without considering all. If at one time all the purchasers buy under time contracts only, and there are no spot sales at all, naturally the price under time contracts would be the only one to consider. If at some other time the purchasers cease to procure any coke under time contracts, and buy what they need at spot sales, the price of spot coke would be the only one to consider, for on such sales only would buyers and sellers come together to make a market. Evidently the jury in this case reached the conclusion that this was exactly the situation; that the deliveries under old contracts to a favored few were not transactions of a kind to make a general market, and that the real price was to be found where persons unsupplied with coke, and wishing to purchase, encountered those who had coke and were willing to sell. The evidence in the case would fairly warrant such a conclusion. Defendant refers to authorities holding that the retail price is not to be taken by a jury as the market price, in settling transactions between litigants concerning wholesale quantities. But if the supply of any particular commodity should be so greatly reduced that buyers generally who were accustomed to purchase it by the thousand could only procure it by the ten, the market price would be that produced by their demand, although, relatively to their former transactions, the quantity bought by each purchaser might be insignificant. The charge correctly defined the phrase "a general advance in the market price," and the exceptions to refusal to charge as requested are unsound.

Defendant further requested the court to charge:

"That the price for which Frick & Co., the largest producers of coke in the Connellsville region, and who supplied more coke to the market than any other producer during the period from May 3, 1894, to August 4, 1894, sold their coke, should have great, if not controlling, weight with the jury in determining whether or not there was a general advance in the market price of coke."

The court had sufficiently instructed the jury as to this evidence in the clause above quoted from the charge, referring to the testimony of Magee. For the reasons already stated, we do not think it was entitled to any great weight in determining whether or not there was a general advance in the market price, in view of the statement of the witness that they sold only to their regular customers under contract, trying to strain a point so as to oblige any person who had been a customer for any length of time, and whose situation was such that he was in great distress, and that the Frick Company chose to sell only to such customers, and at one dollar a ton, the price already agreed upon, when, as the witness conceded, if they had offered coke on the market they could have got more for it than their old customers paid them.

Digitized by Google

We find no harmful error in the admission of evidence of actual sales, which was excepted to, in view of the fact that when the case was finally closed on both sides the jury had been furnished with the facts as to substantially all sales of Connellsville coke to the larger and better consumers during the entire period in question. The judgment of the circuit court is affirmed.

(79 Fed. 255.)

MURPHY v. UNITED STATES.

(Circuit Court of Appeals, Ninth Circuit. February 8, 1897.)

No. 309.

1. GOVERNMENT EMPLOYES—FOREMAN AT NAVY YARD—SUSPENSION—COMPENSATION.

   One who is employed as foreman mason at a navy yard at a per diem compensation is not entitled to compensation except for the time during which he actually renders services; and the fact that, after being suspended by the commandant, he holds himself ready to perform such services, gives him no claim against the government.

2. SAME—INVESTIGATION OF CHARGES.

   The suspension of such an employé by the commandant is, in effect, his discharge; and the fact that after his suspension a board is appointed to investigate charges against him is no recognition of his status as an employé, and gives him no right to compensation, nor to a recovery of sums expended in traveling to attend before the board.

In Error to the Circuit Court of the United States for the Northern District of California.

H. B. M. Miller, for plaintiff in error.
Samuel Knight, Asst. U. S. Atty.

Before ROSS, Circuit Judge, and HAWLEY and MORROW, District Judges.

ROSS, Circuit Judge. This was an action by the plaintiff in error, as plaintiff in the court below, under and by virtue of the act of congress entitled "An act to provide for the bringing of suits against the government of the United States," approved March 3, 1887 (24 Stat. 505). To the third amended petition the government's demurrer was sustained, and, the plaintiff declining to further amend, his petition was dismissed. The writ of error brings up for review the ruling of the court below in the respect stated.

The petition contains two counts. In the first the plaintiff alleged, in substance, that on or about July 23, 1885, he was regularly appointed, by the commandant of the United States navy yard at Mare Island, Cal., foreman mason of the yard and dock department thereof, "at the understood and agreed compensation of six dollars per day"; that under and by virtue of that appointment the plaintiff entered upon the performance of his duties as such foreman mason, and continued in the performance thereof to and including September 29, 1885, when he was, by the commandant, suspended from his

Digitized by Google

position by reason of certain charges preferred against him by the civil engineer of the yard; that thereafter, and on November 19, 1885, the acting secretary of the navy appointed a board to investigate the charges, and ordered that it meet at the yard at Mare Island, November 30, 1885, for that purpose, and report to the department at Washington all the facts deemed to be established by the evidence taken; that the board of investigation met in accordance with the order of the secretary, and, after various sessions, at which witnesses were examined, made its report to the department, recommending the dismissal of the plaintiff from his position of foreman mason. "But," proceeded the petition, "said recommendation was never carried into effect, and said plaintiff has never been discharged from his said position, but has been, and still is, deprived from fulfilling the duties thereof." It will be thus seen that the petition itself showed that at no time after September 29, 1885, did the plaintiff render any service to the United States as foreman mason of the Mare Island navy yard. The allegation, also contained in the petition, that he has, ever since his suspension, held himself in readiness to perform the duties of the position, is of no force or effect, so far as concerns the first count of his petition, by which he seeks to recover "compensation as such foreman mason" from October 1, 1885, to the time of the bringing of the suit, September 28, 1891. As he never rendered the defendant any service during that period, it is plain that he is not entitled to any compensation. Compensation for such services only follows services rendered. Such, too, is the declaration of the statute applicable to and controlling such positions as foreman mason of a navy yard. Section 1545 of the Revised Statutes reads: "Salaries shall not be paid to any of the employés of the navy yards except those who are designated in the estimates. All other persons shall receive a per diem compensation for the time during which they may be actually employed." The plaintiff not being an officer or a salaried employé, but, as shown by the petition itself, a person engaged at a per diem compensation, he was, under the express provision of the second clause of the section of the statute quoted, entitled to such compensation for the time during which he was actually employed, but to that only. Moreover, his suspension by the commandant of the navy yard was, as was held by the court below, in effect his discharge from the employment in which he was engaged. It is not pretended that he was employed for any definite time, but, on the contrary, according to the express allegations of the petition he was engaged at the agreed compensation of six dollars per diem, which was, in legal effect, an employment by the day. The fact that subsequent to his suspension the secretary of the navy appointed a board to investigate and report upon the charges against him was no recognition of his status as a then employé of the government, and certainly could not operate to confer upon him the right to compensation for the time during which he was not actually employed.

The second count of the petition embodied the averments already considered, and therefore also showed that the plaintiff was, in effect, discharged from his employment as foreman mason of the navy yard in question September 29, 1885. That being so, the further al-

Digitized by Google

legation contained in the second count that the plaintiff, "while such foreman mason as aforesaid, and while acting under the orders of the acting secretary of the navy of the United States, was ordered by said acting secretary of the navy to, and did, travel from the city of Washington, D. C., to the said Mare Island navy yard, in California, for the purpose of being in attendance upon said so-called 'board of investigation,' and that he was thereby compelled to, and did, expend in obeying said order the sum of $240 as traveling expenses," is ineffectual to create a valid demand for such expenses against the government. As the specific allegations embodied in the second as well as in the first count of the petition showed that the plaintiff was suspended, and, in effect, discharged, from his position, the allegation last quoted is far from showing that there was any order of the secretary to the plaintiff in his capacity of employé of the government, or that the plaintiff was then under any obligation to obey any order, or that he expended any money in the service of the United States. The judgment is affirmed.

(79 Fed. 257.)

ST. LOUIS & S. F. RY. CO. et al. v. MILES.

(Circuit Court of Appeals, Eighth Circuit. March 1, 1897.)

1. RAILROADS—NEGLIGENCE—INJURIES TO PERSONS ON TRACK.

B. was an employé of a lumber company, engaged in handling lumber at its sheds, situated on both sides of a spur track leading from defendant's line of railroad. The spur was built on land of the lumber company for the purpose of enabling the defendant railroad company to reach the lumber company's mill, and take away lumber. It was the custom of the lumber company's employés, including B., to place a tramway across the track from one shed to the other, when the track was not in use, and to remove it by getting down on the track, and pushing it out of the way, when a train entered the spur. The railroad company's switching crew, who moved trains in and out of the spur, knew of this custom of the lumber company's employés. *Held*, that B. and his fellow employés, while on the spur track, engaged in moving the tramway out of the way of a train entering the spur, were not trespassers, and the railroad company was under an obligation to them to exercise ordinary care in moving its engines and cars so as to avoid injuring them.

2. SAME.

A switching engine entered the spur from the main track to remove some cars of lumber, and the switching crew left the switch open behind it, though they knew a fast train would be due at the switch in a few minutes. While the switching engine stood on the spur, and B. and his fellow employés, who were ignorant of the condition of the switch, were moving the tramway out of its way, the fast train ran into the open switch, collided with the switching engine, and drove it upon B., killing him. *Held*, that the gross negligence of the switching crew in leaving the switch open, was the sole cause of the accident, which could not have been prevented by any precaution B. was bound to take with reference to the presence of the switching engine, and there was no question of contributory negligence in the case.

In Error to the Circuit Court of the United States for the Western District of Arkansas.

L. F. Parker and B. R. Davidson, for plaintiffs in error.

Oscar L. Miles, for defendant in error.

Before CALDWELL, SANBORN, and THAYER, Circuit Judges.

Digitized by Google

THAYER, Circuit Judge. This is the second appearance of this case in this court on a writ of error, which was sued out on each occasion by the St. Louis & San Francisco Railway Company et al., the plaintiffs in error, who were the defendants in the trial court. A. F. Miles, as administrator of the estate of James W. Brown, deceased, sued the defendant railroad company and its receivers for negligently causing the death of his intestate at Van Buren, Ark., on November 21, 1893. On the former hearing the case was submitted in connection with two other cases of the same character, which grew out of the same accident. Railway Co. v. Bennett's Adm'x, 32 U. S. App. 621, 16 C. C. A. 300, and 69 Fed. 525; Railway Co. v. Brown's Adm'r, 32 U. S. App. 632, 16 C. C. A. 682, and 69 Fed. 530; Railway Co. v. Spoon's Adm'r, 32 U. S. App. 633, 16 C. C. A. 680, and 69 Fed. 531. The judgment in the case at bar against the defendant railway company was reversed on the former hearing for reasons which are fully stated in Railway Co. v. Bennett's Adm'x, 32 U. S. App. 621, 16 C. C. A. 300, and 69 Fed. 525. We quote from the statement in the Bennett Case certain facts disclosed by the present record, which will serve to explain the circumstances under which the injuries resulting in the death of the plaintiff's intestate were sustained:

"The scene of the accident was a spur track of the railway company, which extended from its main track at Van Buren, in the state of Arkansas, between two long lumber sheds that belonged to the Long-Bell Lumber Company. The platforms of these lumber sheds were about four feet high, and the space between them in which the cars ran upon this spur track was about sixteen feet wide. It was about 4 o'clock in the afternoon of a November day in 1893. A switching engine, with its crew, had entered the spur from the main track for the purpose of moving cars on the former, and the switch had been left open. There were about fourteen freight cars upon the spur track, and between the two sheds there was an opening between two of these cars which had been made before the switching engine came upon the track. This space was about twenty feet wide. In it the employés of the lumber company had placed a tramway, one end of which rested upon timbers under the platform upon one side of the track, and the other upon the platform upon the other side. When the railway company was not using the spur track, this tramway was used by the lumber company to enable its employés to transfer lumber across the track from one of its sheds to the other. Whenever a switching engine came upon this spur track to move cars, it had been the custom for those employés of the lumber company who happened to be nearest to the tramway to immediately jump down upon the railroad track in the space between the cars and push the tramway back under one of the platforms. At the time of this accident there were some box cars between the engine and the space where the tramway was, and about a dozen of them beyond that space. * * * The deceased was an employé of the lumber company. When the switching engine came in upon the spur track, he and five other employés of that company jumped down upon the track between the cars, and began to push the tramway back under the platform of the shed. From this hole between the lumber sheds and the platform they could not see a train or engine approaching on the railroad tracks, nor could those approaching upon the tracks see them. * * * While they were in this dangerous situation, a freight train came along the main track at a dangerous rate of speed, ran into the open switch, drove the switching engine and cars in upon the spur track, and the deceased and three of his colaborers were caught between the cars, and killed."

On the former hearing it did not appear that any of the officers or employés of the defendant company had any knowledge that the Long-Bell Lumber Company, or its employés, had been in the habit of laying the tramway across the spur track between the lumber

Digitized by Google

sheds for the purpose of moving lumber to and fro. Neither did it appear that on the occasion of the accident the presence of the deceased and his fellow laborers on the spur track between the cars was known to the defendant's employés, or that, while in the situation aforesaid, they could be seen by the servants of the railway company, who were engaged at the time in handling its engines and cars. In view of this state of facts, we held, in the Bennett Case, that, inasmuch as the victims of the accident had voluntarily placed themselves in a position of great danger, where they had no apparent right to be, and that, inasmuch as their presence on the spur track between the cars was unknown to the employés of the railway company, and the latter persons had no reasonable grounds to anticipate their presence at that place, the case disclosed no breach of duty which the defendant railway company owed to the persons who were engaged in removing the tramway, for which it could be held responsible. The record in the case at bar presents a different state of facts. It now appears that the spur track in question was constructed on land belonging to the Long-Bell Lumber Company several years before the accident occurred, and that it was so constructed by agreement between said lumber company and the defendant railway company for the purpose of enabling the latter company to reach the lumber company's mill and sheds with its cars, and to remove lumber therefrom. The testimony shows that for some years prior to the accident the tramway had been used by the lumber company for the purpose of moving lumber across the spur track, and that this fact was well known to the switching crew who did the switching at that place. Some of the witnesses say, in substance, that the regular switching crew would come to the lumber company's mill, if not every day, at least several days each week, either to set empty cars on the spur track or to remove loaded cars therefrom, and that on such occasions they would notify the employés of the lumber company to remove the tramway whenever they found it obstructing the track. Such, it seems, had been the uniform practice for several years prior to the accident, and no officer or employé of the railway company had ever questioned the right of the lumber company to lay the tramway across the track when it was not being used for switching purposes. In short, it is conceded on both sides that the regular switching crew of the defendant company, whose business it was to set empty cars on the spur track and to remove loaded cars therefrom, were well acquainted for a long time prior to the accident with the practice of the lumber company in this respect.

One of the principal contentions on the part of the railway company is that, even on the state of facts disclosed by the present record, the deceased and his fellow employés were trespassers on the spur track while they were engaged in the customary way in removing the tramway, and that the railroad company owed them no duty for the breach of which it can be held responsible. We are not able to assent to this view. The spur track was evidently laid for the mutual accommodation of the lumber company and the railway company, and it was not used for the benefit of the public gen-

Digitized by Google

erally. It passed between and in close proximity to two sheds or storehouses forming a part of the lumber company's milling plant, which was in itself notice to the railway company that in the transaction of its business the employés of the lumber company would frequently be compelled to carry lumber across the track from one storehouse to the other. Besides, we think that the knowledge acquired by the switching crew, while in the discharge of their ordinary duties at that place, that the lumber company was in the habit of laving the tramway across the track, should be imputed to the railway company. The fact that such practice had continued for two or three years, that it was well known to all of the employés of the railway company who had duties to perform on the spur track in question, and that no one had ever objected to such use of the track by the lumber company, should be taken as equivalent to an agreement between the lumber company and the railway company that the tramway might be laid across the track when it was not actually in use by the railway company for hauling its cars.

It results from this view that the servants of the lumber company who were engaged in removing the tramway on the occasion of the accident were in no sense trespassers on the defendant's track. They were where they had a lawful right to be, and in the performance of their ordinary duties. The lumber company and the railway company were in the joint occupancy of the track where the tramway was laid, and the latter company was under an obligation to the employés of the lumber company to exercise ordinary care in moving its engines and cars so as to avoid injuring them. In view of all the circumstances of the case, as above detailed, we are unable to say that the duty which the defendant company owed to the servants of the lumber company who were engaged in the discharge of their duties at the point in question differs in kind from the duty which a railroad company owes to persons at railroad crossings. If there was any difference, it was in the degree or amount of care that ought to have been exercised. That it was bound to take reasonable precautions to avoid injuring them is a proposition, we think, which admits of no controversy.

Counsel for the defendant have indulged in some criticism of the instructions given by the trial court touching the question of contributory negligence, and in some criticism of the manner in which that issue was submitted to the jury; but, from the standpoint from which we view the case, that subject may be eliminated from the discussion. It is manifest that the efficient cause of the death of the men who were removing the tramway—the single act of negligence—consisted in the fact that the switch opening into the main track some distance north of the place where the accident occurred was left open when the switch engine backed into the spur track. The switch was left open by the switching crew, although they well knew that a freight train was approaching rapidly from the north, and would be due at the switch in a few moments. Under the circumstances, the conduct of the switching crew in leaving the switch open was grossly negligent, and it must be regarded as

Digitized by Google

the sole cause of the death of the plaintiff's intestate. None of the men who were at the time engaged in removing the tramway, and who were subsequently killed, were aware that the switch had been left open, and they cannot be charged with negligence for failing to take precautions to guard against a peril which was unknown to them, and which they had no reason to apprehend. In their exposed situation between the two cars, where they could not be seen, it was doubtless their duty to make their situation known to the driver of the switch engine, if it was not known to him, so as to prevent his moving down upon them of his own volition before the tramway was removed. But such precaution, if it had been taken, would not have prevented the accident in question, as they were not hurt by the voluntary action of the engineer in charge of the switch engine, but solely in consequence of the open switch, which permitted the coming freight train to leave the main track and enter the spur track. We think, therefore, that there was no evidence in the case tending to show contributory negligence, and that this issue might well have been eliminated from the charge. At all events, the defendant company is not entitled to complain of what was said by the trial court on that subject.

Some other errors have been assigned upon the record, and noticed in the brief, but they are without merit, and, in our judgment, do not deserve special notice. An inspection of the entire record has served to convince us that the verdict was for the right party, and that no errors were committed which can be regarded as prejudicial to the defendant company. Indeed, considering the undisputed fact that the switch was negligently left open in advance of the approaching train, and that this was the sole cause of the disaster, we do not see how the trial could have resulted differently. The judgment of the circuit court is therefore affirmed.

(79 Fed. 262.)

ST. LOUIS & S. F. RY. CO. et al. v. HICKS (two cases).

(Circuit Court of Appeals, Eighth Circuit. March 1, 1897.)

Nos. 793, 794.

DEATH BY WRONGFUL ACT—EVIDENCE—INSTRUCTIONS.

In an action brought under the Arkansas statute, by an administrator, to recover the damages sustained by the next of kin by the killing of the intestate through defendant's negligence, it is not error to permit the plaintiff to prove the nature of the injuries causing the intestate's death, when the court specifically charges the jury that nothing can be allowed for the pain and suffering of the deceased, nor for the grief or distress of any one.[1]

In Error to the Circuit Court of the United States for the Western District of Arkansas.

L. F. Parker and B. R. Davidson, for plaintiffs in error.

Oscar L. Miles, for defendant in error.

Before CALDWELL, SANBORN, and THAYER, Circuit Judges.

[1] See Railroad Co. v. Wilson, 1 C. C. A. 25 (48 Fed. 57), and note.

Digitized by Google

THAYER, Circuit Judge. These cases were submitted in connection with the case of Railway Co. v. Miles, 79 Fed. 257,[2] and upon the same printed record, inasmuch as the cases grew out of the same accident, and involve the same questions. In case No. 793, Harrison Hicks, as administrator of William Spoon, deceased, sued for compensation for pain and suffering sustained by his intestate, as the laws of Arkansas permitted him to do; while in case No. 794 the action was brought by the same administrator for damages sustained by the next of kin. In the latter case a single question is raised, which did not arise in the case of Railway Co. v. Miles, and was not considered in that case. In the course of the trial, counsel for the defendant company took an exception to the admission of certain testimony showing the nature of the injuries received by William Spoon which had resulted in his death. This proof was objected to on the ground that it was unnecessary to show the nature of the injuries received, inasmuch as the next of kin, for whose benefit the action was brought, could not recover in that suit for any pain or suffering which the deceased had endured as a result of the injuries. The exception thus taken has been argued in this court. The trial court permitted the plaintiff to prove the nature of the injuries sustained by the plaintiff's intestate, and that they had occasioned his death; but it charged the jury specifically that "nothing can be allowed for the pain and suffering of deceased, nor can anything be allowed for the grief or distress of any one." We think that such action on the part of the trial court was not erroneous, and will not justify a reversal of the case. The plaintiff had a right to show that the deceased had received injuries which resulted in his death. The most that can be said in support of the exception is that the court permitted a material fact to be proven in greater detail than was perhaps necessary. But, whatever possible harm was done in allowing the precise nature of the injuries to be shown, was remedied, we think, by the instruction above quoted. It must be presumed that the jury obeyed the instruction of the court, and that the defendant was not prejudiced, although it was unnecessary to show the exact nature of the injuries. The judgment of the circuit court in each of the cases must be affirmed.

(79 Fed. 263.)

BUNKER HILL & S. MINING & CONCENTRATING CO. v. SCHMELLING.

(Circuit Court of Appeals, Ninth Circuit. February 23, 1897.)

1. MASTER AND SERVANT — UNSAFE PREMISES — FELLOW SERVANTS — INSTRUCTIONS TO JURY.

   In an action against a mining company for personal injuries, caused by the fall upon the plaintiff of a mass of ore, which it was alleged had not been properly shored up by the shift boss in charge of the gang with which plaintiff was working, whom the defendant claimed to be a fellow servant of the plaintiff, the court charged the jury that it was the duty of the de-

[2] 24 C. C. A. 559.

Digitized by Google

fendant to provide the plaintiff with a reasonably safe place to work in, and that this duty could not be devolved upon an agent. In another part of the charge the court expressly and fully instructed the jury that the carelessness of fellow servants was one of the risks assumed by the plaintiff, and that, if the accident could be traced to the negligence of a fellow servant of the plaintiff, the defendant was not liable. *Held*, that the doctrine applicable to fellow servants was not withdrawn from the jury.

2. ADMISSIBILITY OF EVIDENCE—DIAGRAM OF PLACE.
It is not error to admit, in connection with the testimony of a witness, a diagram of the place where facts testified to by him occurred, which diagram has been made from the witness' direction, and which he swears is correct.

3. TRIAL IN CIVIL CASES—SEALED VERDICT.
In civil cases the court may, in its discretion, without regard to the consent or objection of the parties, authorize a jury to agree upon, seal, and bring in and present to the court a sealed verdict.

In Error to the Circuit Court of the United States for the District of Idaho.

W. B. Heyburn and John Garber, for plaintiff in error.
Albert Allen, for defendant in error.

Before GILBERT and ROSS, Circuit Judges, and HAWLEY, District Judge.

ROSS, Circuit Judge. This was an action for damages growing out of personal injuries sustained by the defendant in error, who was plaintiff in the court below, alleged to have been sustained by him by reason of the negligence of the plaintiff in error, who was defendant below. The plaintiff was employed as a laborer in the defendant's Bunker Hill Mine, and at the time of the accident was engaged in shoveling ore in the Williams stope of that mine, alleged in the complaint to consist of a large chamber about 200 feet in length, about 100 feet in width, and from a few feet to 30 or 40 feet in height. The complaint alleged that on the 16th day of February, 1894, the defendant had a large number of men, including the plaintiff, employed in extracting ore from the Williams stope, by reason of which it was the duty of the defendant to keep and maintain the stope in good and safe condition; that on and prior to February 16, 1894, the defendant carelessly and negligently mined out the ores and rock from the stope in question, carelessly and negligently leaving great masses of overhanging rocks and ore with scarcely any support, and in such condition that they were liable to fall at any moment, and that by reason thereof the stope became and was a dangerous place for persons to work, which fact, by the use of reasonable care and prudence on the part of the defendant, ought to have been known to it, and in fact was so known; that on February 16, 1894, the defendant, through its officers and agents having charge of the works, well knowing that the Williams stope was an unsafe and dangerous place for persons to work, and well knowing that the overhanging rocks and ore were not well supported, and were liable to fall at any moment, carelessly and negligently required and directed the plaintiff to work therein at shoveling rock and ore; and that while so engaged, without any fault or negligence on the part of the plaintiff, and without any knowledge

Digitized by Google

on his part that the place was dangerous, a large quantity of the rock and ore from the roof of the stope fell upon the plaintiff, seriously injuring him.

The answer of the defendant admitted the employment of the plaintiff as alleged by him, denied the extent of the Williams stope as alleged, but admitted that it was about 200 feet in length, about 58 feet in width, and from 7 to 10 feet in height, and had been made by the defendant in extracting ores therefrom. It admitted that on the 16th day of February, 1894, it was engaged in mining and extracting ore from the Williams stope, and had engaged and employed therein a large number of men, including the plaintiff; and that by reason thereof it became and was the duty of the defendant to keep and maintain that stope in as good and safe a condition as it was possible to keep and maintain the same, so that such persons so employed would not be subject to danger. And the defendant alleged that on the said 16th day of February, 1894, and at all the times mentioned in the complaint, the defendant exercised great care in examining and in inspecting the mine for the purpose of keeping and maintaining the same, and every part thereof, including the Williams stope, in safe condition, in order to avoid all possible danger to its employés; that such examination and inspection was made by competent and skillful miners employed by the defendant for the purpose, and that the miners so employed determined that the stope in question was safe, and free from danger, and that there was nothing in or about it from which the most skillful and careful miner or workman, including the plaintiff, could reasonably expect or anticipate any danger. The answer denied all the allegations of negligence charged in the complaint, and alleged that the ore in the Bunker Hill Mine is in the ledge in large masses or ore bodies, in extracting which it is necessary to excavate large chambers; that, after blasting for the purpose of breaking down the ore in the chambers, the defendant at all times, acting through skillful and competent men, made careful and thorough examinations and inspections of the rock and ore surrounding the excavations, and at all times, including the 16th day of February, 1894, took every care and precaution to protect its employés, and to prevent injury to them, and that the fall of the rock which caused the accident to the plaintiff could not be foreseen or provided against by the most skillful and careful inspection, and was not the result of any fault or negligence on the part of the defendant. The answer further alleged that at the time of the accident to the plaintiff the stope in question was in as safe a condition as it was possible under the most skillful supervision of competent miners to keep it; that the plaintiff was accustomed to working in mines of a similar character to that of the defendant, and was competent to judge of the safety of the stope where he was working; that the risk of working therein was assumed by him as a part of his employment, with the full knowledge of the condition thereof; that the walls of the stope in question were sound, solid, and well supported at all times, and that no rock or other substance at any time fell from either the roof or walls of the stope; that whatever rock did fall in the mine

Digitized by Google

consisted of ore, and fell from the breast of the stope, and not elsewhere, and did not amount altogether to over 10 or 15 tons in quantity; that the persons whose immediate duty it was, and upon whom the responsibility rested, to keep the mine in a safe and proper condition at the point wherein the plaintiff was working at the time of his injuries, were all fellow servants of the plaintiff.

The trial of the case resulted in a verdict for the plaintiff. The record shows that the night before the accident one of the witnesses for the plaintiff called the attention of the night-shift boss to the cracks in the ore and rocks in the roof of the chamber where the accident occurred; and the principal point made at the oral argument in behalf of the plaintiff in error was that the neglect of the shift boss to properly support the roof, after his attention had been thus called to the cracks in it, was the neglect of a fellow servant of the plaintiff, which neglect was, in effect, withdrawn from the consideration of the jury by the instructions of the court below to the effect that the duty devolved upon the defendant company to provide the plaintiff with a reasonably safe place in which to work, and that that duty could not be devolved upon an agent so as to exonerate the defendant from liability for neglect in that regard. In a subsequent portion of its charge the court instructed the jury as follows:

"In employment such as stoping ore from mines in large stopes, such as are shown to exist in the mines of the defendant where the injury is alleged to have occurred, it is to be expected that the danger to the workmen will be greater at some times than at others. From the very nature of the work, the obligation of the employer to provide a reasonably safe place for his employés to work upon and in does not oblige him to keep the place where they are employed in such occupation as stoping ore from the mines, in a safe condition at every moment of their work, so far as its safety depends upon a due performance of their work by them or their fellow servants. That is a request which the defendant asks. I give it, with this explanation: To illustrate: You have seen by the testimony here that this work is carried on by cutting off slabs of ore from the roof of the stope. It is cut down in benches or in blocks. They start and stope along, and here is a block of ore standing square, I presume like that; here is the floor running along in this direction; up above here is the ore. Now, you must see that there are times when everything cannot be absolutely safe, cannot be kept as safe at one time as at another. For instance, when that block of ore is being cut off, it is more or less without supports under it; for the time being there is more risk there than there would be at other times. Now, that is what that instruction means,—simply that there are times when the danger must be greater than at other times, because it necessarily must follow that in mining you cannot keep timber so thick under it that it would be absolutely safe at all times, because that ore must be taken down. It is one of the natural risks that men must incur in mining, that these blocks of ore must be left at some times so they can get them down. That is as far as I mean that instruction to go."

No issue was made in the case in respect to the duty of the defendant to furnish the plaintiff with a safe place in which to work. The complaint alleged that duty on the part of the defendant, and the answer of the defendant conceded it. The defense made by the answer was that the defendant performed that duty, but that the rock that fell upon the plaintiff and injured him consisted of ore that fell from the breast of the stope, and that the persons whose duty it was, and upon whom the responsibility rested, to keep the

Digitized by Google

mine at that point in a safe condition were fellow servants of the plaintiff, for whose neglect in that regard the defendant was not responsible; and that the risk of working where he was injured was assumed by the plaintiff as a part of his employment, with full knowledge of all of the surrounding conditions. The record does not contain the evidence in the case. But the court below stated in the portion of its charge above quoted that the testimony showed that the mining was carried on by cutting off slabs of ore from the roof of the stope, and the court proceeded to explain to the jury that when such a block was being cut down it was, of necessity, more or less without supports under it, and that, as a consequence, there was at such times necessarily more risk to the miners than at other times, which risks the miners assumed as one of the incidents of their employment. To this, as far as it goes, the counsel for the plaintiff in error do not object; but they insist that, as the real defense was the neglect of the shift boss to properly support or remove the ore that fell and injured the plaintiff, after having had his attention called to the cracks in it, the defendant was entitled to the benefit of the doctrine applicable to fellow servants, and that that doctrine was, in effect, withdrawn from the consideration of the jury by the instruction that the duty of the defendant to furnish the plaintiff with a safe place in which to work could not be delegated to an agent. It does not appear from the record what the duties of the shift boss were. He may or may not have been the fellow servant of the plaintiff, depending, not upon his grade and control over the other members of his shift, but upon the character of the acts he was required to perform. Railroad Co. v. Peterson, 162 U. S. 346, 353, 16 Sup. Ct. 843; Mining Co. v. Whelan, 12 C. C. A. 225, 64 Fed. 462, 465, and authorities there cited. If he was such fellow servant, and the accident to the plaintiff happened through his negligence, the defendant was not answerable therefor. And so the court below told the jury; not, it is true, with specific and direct reference to the shift boss, but no such request appears to have been made of the court by the plaintiff in error, nor was the court requested to instruct the jury as to what constituted a fellow servant of the plaintiff. But the court, in its charge to the jury, did in express terms instruct the jury that among the risks assumed by the servant is the risk of carelessness on the part of fellow servants. "The master is not responsible," said the court, "in any instance, for the accidents to a laborer which occurred from the carelessness of another fellow servant. He is responsible for those acts of some other employé who is a vice principal of a master, or who is his direct agent; but he is not responsible for the accidents that result to him from the carelessness of a co-laborer. So that in this case, if this accident could be traced to the direct carelessness, not of an agent or superior servant, but to some fellow servant and co-laborer, then the plaintiff would have to assume that himself. Those, now, are among the risks that a laborer assumes in entering into employment,—that is, unforeseen accidents that cannot be guarded against, cannot be provided for; and, as I said, the accidents that may result from care-

Digitized by Google

lessness of a co-laborer. If this accident resulted from any such causes as I have stated, the plaintiff cannot recover, etc." It cannot be properly held, therefore, that the doctrine applicable to fellow servants was withdrawn from the consideration of the jury by the instruction that the duty of the defendant, admitted in his answer, to furnish the plaintiff with a safe place in which to work, could not be delegated to an agent.

It is also contended that the court below erred in admitting expert testimony in respect to the condition of the roof of the mine. The record, however, does not contain any such objection and exception as presents the question.

Another point made on behalf of the plaintiff in error is that the court, against the objection and exception of the plaintiff in error, admitted in evidence a diagram of the stope where the accident occurred, made by one Easton upon the representations of the witness Powers and others as to its appearance after the accident. Powers testified that it was a fair representation of the workings in the stope immediately after the accident, and the court admitted it, in connection with his testimony only as his version of the workings, which the jury might consider for what it was worth. In this we see no error.

The only other point which need be specially noticed is the action of the court below in authorizing the jury, upon agreeing upon a verdict during the night, to thereupon seal it, and return it to the court upon its opening the following morning; the jury meanwhile separating. To that course the defendant not only did not consent, but objected, and to the action of the court in the respect stated reserved an exception and objected to the receiving of the verdict so agreed upon, sealed, and brought into court; the jury having meanwhile separated. The cases holding that this may be done by consent of the parties are very numerous. Many of them will be found cited in the notes to pages 414–416, 28 Am. & Eng. Enc. Law. And, as will be there seen, it has been held by some courts that, in the absence of statutory prohibition, the practice is admissible in the discretion of the presiding judge, without regard to the consent of the parties, even in criminal cases. This is contrary to the general rule, but the tendency of modern decisions undoubtedly has been, as said in Com. v. Carrington, 116 Mass. 37, "to relax the strictness of the ancient practice which required jurors to be kept together from the time they were impaneled until they returned their verdict, or were finally discharged by the court." Whatever the proper rule may be in criminal cases, we think it may, in civil cases, be safely left to the sound discretion of the court, without regard to the consent or objections of the parties, to authorize a jury to agree upon, seal, and bring in and present to the court a sealed verdict. In such a case the verdict is to be put in writing before the jury separate, is thereupon sealed, and, when brought into court, is affirmed by the jury before it is received by the court. The judgment is affirmed.

Digitized by Google

(79 Fed. 268.)

NORTHERN PAC. R. CO. v. LYNCH.

(Circuit Court of Appeals, Ninth Circuit. February 8, 1897.)

1. REVIEW ON ERROR—INSTRUCTIONS—NEGLIGENCE.
   While, in a simple case, involving only the issues of negligence of the defendant and contributory negligence of the plaintiff, it is better for the court to give a few terse and pointed instructions upon what constitutes the one and the other, yet if the instructions given are unnecessarily voluminous, and unnecessarily and improperly multiplied upon the same points, it is not permissible to select particular clauses, and consider them apart from their context, but the instructions must be taken as a whole, and if, so taken, the jury have been fairly instructed, no error can be justly affirmed.
2. NEGLIGENCE—INSTRUCTIONS.
   The instructions given in this case upon the questions of negligence and contributory negligence considered, and found unobjectionable.

In Error to the Circuit Court of the United States for the District of Montana.

Cullen & Toole, for plaintiff in error.

Before GILBERT and ROSS, Circuit Judges, and HAWLEY, District Judge.

ROSS, Circuit Judge. This was an action for damages for personal injuries sustained by the defendant in error by reason of a collision with one of the railroad company's trains in Montana at a point where the railroad track was crossed by a public highway. The case was here once before, and is reported in 16 C. C. A. 151, 69 Fed. 86. It is conceded that the facts as now presented are substantially the same as those presented on the former hearing. The defendant in error, who was the plaintiff in the court below, lived near the place of the accident, and was familiar with the crossing and with the running of the trains. The country was open and flat, and the accident occurred upon a clear and quiet day. The plaintiff had been to a blacksmith shop, going by the public road, and had crossed the railroad track in doing so. He returned by the same road, which for some distance ran parallel to the railroad track, and, when he reached a point where the public road curves towards the railroad track to cross it, he saw a freight train approaching upon the main track of the railroad. There was a side track on the side from which the plaintiff was approaching, a distance of eight feet from the main track. Upon seeing the train the plaintiff pulled up his horses, which were trotting along at a 5 or 6 mile gait. He was at this time about 36 feet from the main track. He succeeded in getting the team stopped for an instant very close to the track, but the horses, becoming frightened, dashed upon the track, and the wagon was struck by the engine, from which the injuries complained of resulted. There were but two controverted questions in the case, —one, the negligence of the railroad company alleged by the plaintiff; and the other, the contributory negligence on the part of the plain-

Digitized by Google

tiff alleged by the defendant. On the former hearing of the case this court held that the question of the plaintiff's contributory negligence was a question for the jury to determine, under, of course, appropriate instructions. That ruling has become the law of the case, and is not here open to argument. The only questions properly presented upon the present hearing relate to the giving and refusal to give by the court certain instructions to the jury. The case was a very simple one, requiring very few instructions; and yet a large number were requested by both plaintiff and defendant, many of which were given by the court, and some of which were refused. It would have been in this, as in all similar cases, far better for the court to have given a few terse and pointed instructions upon the subject of what constituted negligence upon the part of the defendant and contributory negligence upon the part of the plaintiff, with instructions as to the proper consequences to flow from the findings of the jury upon those questions. Still, where instructions are unnecessarily voluminous, and are unnecessarily and improperly multiplied upon the same points, it is not permissible to select any particular clause or particular clauses, and consider them, unconnected with their context. In every case the instructions must be taken as a whole, and if, so taken, the jury have been fairly instructed in the law governing the particular case, no error in such instructions can be justly affirmed. A careful consideration of the instructions given by the court below in the present case leads to the conclusion that the law properly applicable to the case was clearly enough given, and that the defendant in error could not have been prejudiced by them, or by the refusal to give others. The court below instructed the jury that under the statute of Montana it was the duty of the defendant company, in approaching the crossing in question, to sound the whistle and ring the bell within not less than 50 nor more than 80 rods from the crossing, and that a failure on the part of the employés of the defendant company in charge of the train that inflicted the injury to the plaintiff to do so would constitute negligence on the company's part for which the company would be liable, in the absence of contributory negligence on the part of the plaintiff, and that it was for the jury to say whether the evidence showed that the defendant was guilty of negligence in not giving proper notice of the approach of its train to the crossing, or in letting off steam from the boiler, or in not exerting proper efforts to stop the train upon discovering the imminent peril of the plaintiff. And, concerning the question of contributory negligence, the court instructed the jury, among other things, that if they should find from the evidence that the plaintiff was familiar with the crossing in question and its dangers (the evidence showing that he lived within a few hundred feet of it, and had so resided for many years), and that, under the circumstances appearing, he knew, or, as an ordinarily prudent man, ought to have known, the time when the train that did the damage was due, or that he knew, or, as an ordinarily prudent man, ought to have known, that trains were frequently passing over the crossing in question, and that in approaching the crossing on the occasion of the accident he failed to act as a prudent

Digitized by Google

and cautious man should have acted, or that he omitted precautions that a prudent man ought to have taken, whereby he was injured, he could not recover from the defendant company; that it was incumbent upon the plaintiff to use all his faculties of seeing and hearing, and to listen, and also to look both ways to see if a train was approaching, and that it was his duty to approach the crossing cautiously and carefully, and to do everything that a reasonable man would do before he attempted to cross the railroad track. The jury were further instructed to—

"Note the character of the crossing; the fact that there was no difficulty of observation along the line of the railroad track; the time of day, and the probable danger from passing trains; the character of the weather; the fact that other persons, situated at a greater distance from the approaching train than the plaintiff, heard the whistle blow, and heard the rumble of the train as it approached,—and every fact and circumstance bearing on the case to clearly influence the plaintiff's conduct then and there, under those circumstances, and say, upon your fair and impartial judgment, whether he acted as a man of ordinary prudence should have acted, and with the due care and caution demanded by the exigencies of the occasion. If he did not so act, the railroad company is entitled to your verdict, whether it was negligent or not."

The court, in another place, told the jury that to constitute contributory negligence there must be a want of ordinary care on the part of the plaintiff, and a proximate connection between that and the injury. We are of opinion that the plaintiff in error has no valid ground to complain that the jury was not sufficiently instructed upon the question of contributory negligence.

In the course of its charge the court below said:

"The defendant railroad company presents two theories as to how this injury occurred: One is that plaintiff, Lynch, was driving his team down to the said crossing, intending to cross the same ahead of the train, and did not calculate accurately the speed of the train, and, on account of this miscalculation, got injured. The other is that plaintiff approached the railroad crossing without having examined the railroad, and for some reason was oblivious of the approach of the train until it was upon him."

Counsel for the plaintiff in error assert that there was "absolutely nothing either in the pleadings or the proof upon which to base" this statement, and they contend that it constitutes reversible error. The record does not sustain counsel's assertions in this respect, for in the defendant's answer it is alleged that:

"The said plaintiff, wholly disregarding his duty as an ordinarily prudent man, recklessly, carelessly, and negligently drove his horses, with a wagon attached thereto, up to and upon said railroad track, and attempted to make said crossing, and caused the collision which resulted in the accident complained of."

This allegation clearly justifies the statement made by the court that one of the theories of the defendant was that it was the intention of the plaintiff to cross the track ahead of the train, but that he miscalculated its speed, and as a consequence was injured. Further justification for that statement is found in the testimony of the plaintiff himself, and also in that of the witness McGowan, where they give it as their impression that the plaintiff struck one of his horses with the line just before the engine reached the crossing, in order to get across the track ahead of the train. In the cross-examination

Digitized by Google

of the witness Bowling, the defendant brought out this statement from the witness:

"There was nothing to obstruct the view between me and the accident, and nothing to prevent Mr. Lynch from seeing the train. I did not see him turn his head to look for the train, and he did not stop at any point to listen for it until he stopped near the edge of the rail."

And the witness Welsh, upon cross-examination by the defendant, testified:

"If I had been looking for the train, I could have seen it coming for a couple of miles. It was a clear, nice day; no wind blowing, to speak of. After leaving the culvert the team was traveling at about the same speed as when I saw them. They were trotting. Mr. Lynch seemed to be looking straight ahead, at his horses. The horses trotted up to within a short distance of the side track. I think they had their heads close over the rails when they stopped. They stopped merely an instant. Just stopped good when they made a jump."

This testimony brought out by the defendant would seem to justify the court in stating that one of the theories of the defendant was that the plaintiff seemed oblivious to the approach of the train until it was upon him. The judgment is affirmed.

(79 Fed. 271.)

WHITE et al. v. BLUM.

(Circuit Court of Appeals, Fifth Circuit. February 23, 1897.)

1. TRIAL - INSTRUCTIONS—DIRECTING VERDICT.
   When the court, in the presence of the jury, has said to counsel that it had expected a request to direct a verdict for the plaintiff, but, if counsel preferred to have the case submitted to the jury under instructions prepared by them, the court would so submit it, but would set aside any other verdict than one for the plaintiff, such action is equivalent to a direction to return a verdict for the plaintiff, and will be so treated by an appellate court.
2. LAND GRANTS—VALIDITY—EXCESSIVE QUANTITY.
   In the absence of objection by the proper political authority, a grant of land should not be displaced by a junior grant, nor declared void, simply because, according to the lines of the survey, it contains more land than the state intended to grant.
3. SAME—SURVEYS.
   Upon an examination of the evidence as to the boundaries of the grant in question in this case, *held*, that the fact that the lines of the survey, as laid down in the field notes, included more land than the state was authorized to grant for the purpose intended, furnished no reason for reversing the calls of the survey and altering one of the lines, so as to diminish the quantity of land, especially when such change would result in unsettling the titles of many persons who have paid value for the land, and held it for many years.

In Error to the Circuit Court of the United States for the Northern District of Texas.

Suit was brought by the defendant in error (plaintiff in the court below) in the ordinary form of "trespass to try title," to recover four tracts of land situated in Clay county, Tex. W. M. Bowman, B. F. Strange, and others were made defendants in the original petition filed in the circuit court, and the war-

Digitized by Google

rantors of title of the defendants were subsequently brought in by the latter. Upon the issues joined between the plaintiff in the court below and the original defendants, and upon those raised between such defendants and the warrantors, the suit proceeded to its final determination. At the conclusion of the evidence the plaintiffs in error requested several special instructions, which were refused by the court, and, in lieu thereof, the court submitted to the jury a general charge prepared by the defendant in error. The bill of exceptions discloses that before reading the charge, and in the presence of the jury, the court, in reply to the argument of counsel for the plaintiffs in error, made the following statement, as copied from the record, but which seems somewhat confused: "The court further said that the undisputed facts show that in constructing the Cherokee county school land by its calls for course and distance alone, that it would contain four leagues of land, but to do so it would be necessary to cut the north line of said school land survey short 1,017 varas. The court told the jury that it was of the opinion that such should be the construction of the survey; but, if constructed according to defendants' contention, that it would contain an excess of about two thousand acres; that the quantity of land in the grant might be an important circumstance to be considered in arriving at the intention of the surveyor who surveyed the land and the intention of the state; that the court regarded the area of the survey in this case of great importance in determining the boundaries of the survey, inasmuch as the constitution of the state of Texas only granted to each county four leagues of land, no more, no less; that Judge McCormick so expressed himself in his opinion on a former appeal; that at the time the charge given by the court to the jury was submitted to him by counsel for the plaintiff, and they asked the court to submit the case to the jury on said charges, to which the court replied that he thought they would ask the court to instruct the jury to find for the plaintiff, but, if they preferred it, he would submit the case to the jury under said charge, but, if the jury found any other verdict than for the plaintiff, he would set it aside. The statement was made in the presence and hearing of the jury, and before said charge was read, as well as the other remarks of the court hereinbefore set out. That, while these are my views, it is for the jury to determine the fact, and render their verdict accordingly. After the argument of counsel, the court expressly and emphatically told the jury (in oral charge as well as in written charge) that they were the sole judges of the weight of the evidence and the credibility of the witnesses, and that they must arrive at their own conclusions as to the facts." A verdict was returned in favor of the defendant in error, and judgment duly rendered thereon. To reverse this judgment, B. F. Strange, an original defendant, C. C. White, Joseph A. Kemp, and A. Newby, warrantors, prosecute error.

S. H. Hodges, for plaintiffs in error.

Henry Sayles, for defendant in error.

Before PARDEE and McCORMICK, Circuit Judges, and MAXEY, District Judge.

MAXEY, District Judge (after stating the facts as above). We regard the language used by the trial court in the presence of the jury as equivalent to an affirmative direction to return a verdict in favor of the defendant in error, and we shall treat it accordingly. It is not necessary, for the disposition of this case, to notice all the errors assigned by the plaintiffs in error, nor to critically examine the charges given and refused. While, generally speaking, and abstractly considered, the charge of the court and the special instructions requested by the plaintiffs in error declare correct legal principles, they are nevertheless misleading in some material respects when applied to the facts of the case. The true location of the east boundary line of the Cherokee county school survey is the real question involved in the

Digitized by Google

controversy. And it is evident to us that the court below, in reference to the location of this line, attached undue importance to the mere excess in area of the survey, as located according to the contention of the plaintiffs in error. Under the laws of the state of Texas, Cherokee county was entitled to a grant of four leagues of land, and the excess complained of amounts approximately to 2,000 acres. It is a well-recognized principle that, where the proper political authority is not objecting, and no question of fraud is involved, an elder survey should not be displaced by a junior grant, nor declared void, simply because it contains more land than the state intended to grant. This view of the law is not in conflict with anything said by this court upon the former hearing of the case (Blum v. Bowman, 30 U. S. App. 50, 14 C. C. A. 158, and 66 Fed. 883), and is in perfect harmony with the doctrine announced by the supreme court and the highest courts of Texas. The principle is thus stated by Mr. Justice Catron, speaking for the court, in White v. Burnley, 20 How. 247:

"The next question appears on the face of the grant. All the steps leading to the grant, with one exception, are regular. The quantity of land that the lines of survey include is equal to two leagues, whereas only one league is called for; and the reason the surveyor gives in his certificate of survey for the excess is that he included in the survey a bay of the ocean, which was not subject to grant,—a quantity equal to a league. This statement was proved to be untrue, almost entirely. The grant contains two leagues and more of fast land, and for this reason it was insisted at the trial that it was fraudulent and void. But the court charged the jury to the contrary, with several qualifications. These we deem to have been useless, as our opinion is that a regular grant (that is, a completed title, made by those exercising the proper political power to grant land) is not open to this objection by an opposing claimant setting up a younger title: and we understand that on this principle the well-considered cases of Hancock v. McKinney, 7 Tex. 384, and of Swift v. Herrera, 9 Tex. 263, proceed. Such is the settled doctrine elsewhere. Overton's Lessee v. Campbell, 5 Hayw. (Tenn.) 165. How far the government of Texas might interfere by 'due course of law' (that is, by a suit in its name and behalf) is a question for that government to decide. Owens v. Rains' Lessee, Id. 106, is to the effect that it can only be done by suit. To hold that this grant was void because the surveyor returned an excess in his survey, without any evidence that the grantee participated in the matter, as is the case here, would be an alarming doctrine through a widespread portion of the United States."

Approving White v. Burnley, the supreme court of Texas says:

"These observations apply in their full force to the present case upon the supposition that it was shown that the grant was, in fact, excessive. It was, at most, voidable; not void. The appellant had no interest to be affected by it at the time; nor does he appear to have acquired a right to appropriate any part of the public domain until many years subsequent. If the government is content, he can have no right to complain. If his claim had existed at the time, there was ample scope for its satisfaction out of land not previously appropriated or granted. The grant not being void, the land embraced within it was not vacant, or subject to location by the plaintiff. This view of the case will necessarily lead to an affirmance of the judgment." Maxey v. O'Connor, 23 Tex. 241

See, also, Elliot v. Mitchell, 28 Tex. 111, 112.

The location of the east line of the Cherokee county survey depends upon the length of its north line, extended east from the northeast corner of Scott survey No. 13. These two surveys, together

Digitized by Google

with the four surveys claimed by the defendant in error, to wit, the two Sweeney, the Rains county, and the Cassillas, are delineated upon the following sketch:

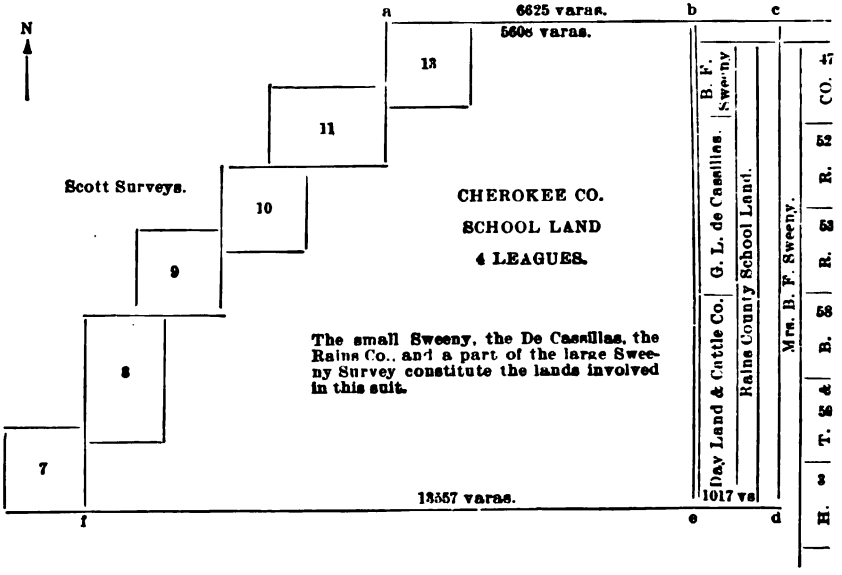

In this sketch, a, b, c, represents the north line; c, d, the east line; and d, e, f, the south line,—of the Cherokee county survey, as contended by the plaintiffs in error. The line a, b, represents the north line; b, e, the east line; and e, f, the south line,—of said survey, as claimed by the defendant in error. The survey, as constructed by the plaintiffs in error, includes the four tracts in controversy; but, if constructed according to the contention of the defendant in error, these four tracts are excluded, in which event the verdict and judgment are correct, and should be sustained.

In 1853 the Scott surveys No. 7, 8, 9, 10, 11, and 13 were located, by work on the ground, by the surveyor, William Hudson. In 1855 the same surveyor put in by projection, east of the Scott surveys, the Cherokee county four-league grant. The east lines of the six Scott surveys constitute the west boundary line of the Cherokee county survey, the field notes of the latter calling first for the southeast corner of Scott survey No. 7 as its beginning point, thence running north and east until the northeast corner of Scott survey No. 13 is reached. The original field notes of the Cherokee county survey, prepared by William Hudson in 1855, being found incorrect in some particulars, were corrected in 1877 by the surveyor Sam Green, and upon the corrected field notes the patent was issued by the state. We do not regard the matter of the correction of the field notes as of much materiality in this controversy, as all parties to the suit concede, as we have already shown, that the east lines of the Scott surveys form the west boundary line of the

Digitized by Google

Cherokee county survey. Upon the first trial of the cause in the circuit court the principal point of difference between the parties seems to have been as to the location on the ground of the northwest corner of Scott survey No. 13; the present plaintiffs in error insisting that a certain marked bearing tree designated such corner, and the defendant in error contending that it was about 1,017 varas further west. This difficulty was removed upon the second trial, and it is now conceded by the defendant in error that the northwest corner of Scott survey No. 13 is located at the point as originally claimed by the plaintiffs in error. It is also admitted by the parties that the southwest corner of Scott survey No. 8 is well identified and marked on the ground. These two corners being thoroughly established and well recognized,—i. e. the northwest corner of Scott survey No. 13 and the southwest corner of Scott survey No. 8,—the northeast corner of No. 13 and the southeast corner of No. 7 may be ascertained with mathematical precision. The northeast corner of No. 13 is 1,900 varas east from its northwest corner, and the southeast corner of No. 7 is 1,400 varas south from the southwest corner of No. 8. The evidence in the record shows that the surveyor Green knew where the corners of Scott survey No. 13 were located on the ground when he made the corrected field notes of the Cherokee county survey, in 1877; and the evidence further tends to show that the exact location on the ground of the southeast corner of the Cherokee county survey was also known to him at that time. Upon this point C. B. Patterson, whose testimony was uncontradicted, testified in behalf of the plaintiffs in error as follows:

"The lines of the Cherokee county school land and Scott surveys were located by Sam Green, county surveyor of Clay county, about 1879, and, so far as I know, the same have been recognized as the true lines and corners of said surveys until this controversy arose. The southeast corner of the Cherokee county school land, so far as I remember, was not pointed out to me by any one; but Sam Green * * * directed me how to find it, and from his description of it I did find it. Sam Green is now dead. * * * He told me that there was a stone at said corner, and I found it to be marked as he described it. Its location corresponded with the Cherokee county school land as claimed by these defendants."

Recurring to the field notes of the Cherokee county survey, which, as above shown, call for the southeast corner of Scott survey No. 7 as its initial point, thence north and east, with the Scott surveys, to the northeast corner of Scott survey No. 13, the calls continue as follows: "Thence east 6,625 varas, a stake, for the N. E. corner of this survey; thence south 9,886 varas, a stake, S. E. corner of this survey; thence west 13,557 varas, to the beginning." The objection of the defendant in error to the south line is that it is too long by 1,017 varas. But the last call of the field notes runs west from the southeast corner not only 13,557 varas, but to the beginning. The beginning point is the southeast corner of Scott survey No. 7, which is easily and unmistakably ascertainable, and it should therefore be given the dignity of an "artificial object," and

Digitized by Google

held superior to the call for distance. The rule is stated by Mr. Justice Henry in Maddox v. Fenner, 79 Tex. 291, 15 S. W. 239:

"When unmarked lines of adjacent surveys are called for, and when from the other calls of such adjacent surveys the position of such unmarked lines can be ascertained with accuracy, and when, in the absence of all evidence as to how the survey was actually made, there arises a controversy as to whether course and distance or the unmarked line of another survey shall prevail, we see no good reason why the survey line should not be given the dignity of an 'artificial object,' and prevail over course and distance."

See, also, Fordtran v. Ellis, 58 Tex. 245; Worsham v. Chisum (Tex. Civ. App.) 28 S. W. 905; Worsham v. Morgan (Tex. Civ. App.) 28 S. W. 918.

Protracting the south line along its course west to the southeast corner of Scott survey No. 7, the survey closes, without conflicting or interfering in any manner with contiguous locations. The only possible objection to such a construction of the grant goes to the question of excessive area,—a plausible objection, but one completely overthrown by adjudged cases. But the defendant in error, although claiming under a junior grant, insists that the calls should be reversed, and the lines run as follows: Beginning at the southeast corner of Scott survey No. 7; thence east 13,557 varas, a stake, for the southeast corner of this survey; thence north 9,886 varas, a stake for the northeast corner; thence west 5,608 varas to the northeast corner of Scott survey No. 13. In thus constructing the survey, the north line would be 5,608 varas in length, instead of 6,625, as called for in the field notes, and the survey would contain about 597 acres less than the quantity of land which the state intended to grant. Not only so, but innocent third parties, who purchased the Cherokee county survey, inclosed it, and took actual possession, several years prior to the locations of the defendant in error, believing themselves to be within the boundaries of the survey, would be deprived of their property, which they had bought in good faith, and for which they had paid a valuable consideration. The reversal of the calls is not warranted when productive of such a result.

The defendant in error is not entitled to recover the lands in controversy, and the trial court should have directed a verdict against him. For the reasons assigned, the judgment of the circuit court should be reversed, and the cause remanded, with directions to grant a new trial, and it is so ordered.

(79 Fed. 277.)

TYLER MIN. CO. v. SWEENEY et al.

(Circuit Court of Appeals, Ninth Circuit. February 1, 1897.)

No. 318.

1. MINES AND MINING—LOCATION—VEIN CROSSING SIDE LINES—EXTRALATERAL RIGHTS.

When a vein of mineral-bearing rock, in its course lengthwise, after passing under the surface limits of one location, on which it outcrops, crosses nearly at right angles the side lines of another, prior location, on which it

Digitized by Google

also outcrops, the side lines of such prior location becoming, by reason of the course of the vein, its end lines, the right to follow the lode in its downward course, between the vertical planes drawn through such side end lines, belongs to such prior location, and the extralateral rights of the other location cease when the vertical plane so drawn between the two locations is reached.

2. COSTS IN EQUITY—DISCRETION OF TRIAL COURT.
The award of costs in equity cases rests in the sound discretion of the trial court, and will not be disturbed by an appellate court except in cases of manifest abuse of such discretion. Accordingly, *held*, in this case, that no sufficient reason appeared for disturbing the decision of the trial court refusing to award costs against a successful defendant, on the ground that it was the real party in interest behind two other defendants, who were unsuccessful.[1]

3. APPEAL AND ERROR—CLERK'S TAXATION OF COSTS.
A writ of error or appeal cannot be taken to review the decision of the clerk upon a taxation of costs, though a decision of the court affirming or reversing a decision of the clerk upon an appeal taken pursuant to the rules of the circuit court may in some cases be so reviewed.

In Error to the Circuit Court of the United States for the District of Idaho.

This cause was tried before the circuit court, a jury having been waived by stipulation of the parties, as provided by section 649 of the Revised Statutes, upon an agreed statement of facts, as follows: "First. That the Tyler Mining Company is the owner of the Tyler mining claim, as described in the fourth paragraph of the complaint, and the said Tyler mining claim, of which the ground so described is a part, was located on September 20, 1885, and has been duly conveyed to the plaintiff in this action. Second. That the Last Chance Mining Company is the owner of the Last Chance mining claim, as described in the said defendant's supplemental answer on file in this case, and that the boundaries of both claims are correctly laid out on the diagrams on file in this action. Third. That a vein of mineral-bearing rock and earth is found in both of said mining claims at the point of discovery on each, and had been discovered therein prior to their location; that the course of the vein in each of the claims is as shown in the diagram, its width, approximately, being about three hundred (300) feet, and its dip from the apex, which is found upon each of said claims, is to the southwesterly at an angle of about forty-five (45) degrees from the horizontal. It is further admitted that the line of the vein, as indicated on the diagram and models, is approximately the line of the footwall, and that the said vein passes through the southerly side line of the Tyler claim as originally located, and crosses the northwesterly end line thereof, and said vein, after crossing the said southerly side line of the Tyler claim, as originally located, passes through and crops upon the Last Chance claim, as shown upon said diagram; that the discovery upon each of said claims was upon said vein so outcropping, and the ores and ore bodies in controversy are in and a part of said vein. It is further admitted that the Last Chance claim was located on the 17th day of September, 1885, and the rights of said company run from that date. The legal existence of the two corporations, the Tyler Mining Company and the Last Chance Mining Company, is admitted. Fourth. It is admitted that the apex of the vein is within the side lines of the Tyler and also of the Last Chance claims, and that the Last Chance has taken no ores which are not found perpendicularly beneath its surface ground. Fifth. It is admitted that in 1887 the Tyler Mining Company applied for a patent upon the Tyler claim, as originally located, and that the then owners of the Last Chance mining claim duly filed an adverse claim to a certain portion thereof, and that the proceedings upon which application was made and said adverse claim was founded are correctly set forth in the verified transcript of such proceedings, which is here made a part of this state-

[1] As to the "Right to Costs in Equity," see the very comprehensive note attached to Salt Co. v. Brigiel, 17 C. C. A. 368.

Digitized by Google

ment, and to be considered as such. Sixth. It is further agreed that the Last Chance Mining Company made an application for a United States patent for the Last Chance mining claim, and that such patent had issued therefor, the proceedings upon which said application for patent, and the patent issued thereon, as certified by the commissioner of the general land office, are hereby admitted as a part of this statement. Seventh. It is further agreed that the judgment roll and the findings of fact and conclusions of law certified in the case of the Last Chance Mining Company against the Tyler Mining Company, heretofore offered in evidence in this case, and referred to in the decision in the United States supreme court, in considering this case, are made a part of this statement. Eighth. It is further agreed that the map of the plaintiff (Exhibit A) and models may be treated and regarded as a part of this statement for any purpose which the court may deem material, and that the diagram, as found in the report of the case in 54 Fed. 284 [4 C. C. A. 329, and 7 U. S. App. 463], is the diagram which is referred to herein, and is made a part hereof. It is admitted that the defendant the Last Chance Mining Company has taken a large amount of ore out of the vein aforesaid, claiming to be the owner thereof, and if the court shall find that the Tyler Mining Company is entitled to the said vein, under the surface boundary, that the Last Chance Mining Company is liable therefor, and that an accounting of the value of the same may be had hereafter to ascertain such value."

The diagram referred to in the eighth statement of facts is as follows:

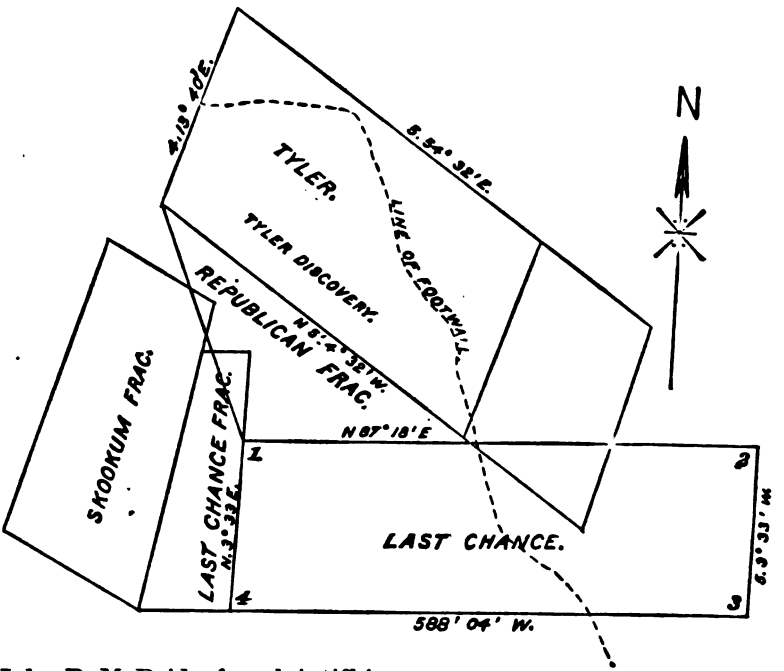

John R. McBride, for plaintiff in error.
W. B. Heyburn, for defendants in error.

Before GILBERT and ROSS, Circuit Judges, and HAWLEY, District Judge.

HAWLEY, District Judge (after stating the facts as above). This is an action in ejectment to recover that portion of the Tyler lode which is alleged to have its apex inside the Tyler location, and to

Digitized by Google

extend on its dip southerly beyond the surface side line of the Tyler claim, and for damages. It was brought against several individual defendants and three different mining corporations, namely, the Last Chance Mining Company, the Idaho Mining Company, and the Republican Mining Company. It has been dismissed as to the individual defendants. At the first trial in the circuit court, judgment was rendered in favor of the Last Chance Company, and against the Republican and Idaho Mining Companies, neither of which sued out any writ of error from that judgment. The Tyler Company sued out a writ of error to this court, and the judgment in favor of the Last Chance Mining Company was reversed. Mining Co. v. Sweeney, 4 C. C. A. 329, 54 Fed. 284, and 7 U. S. App. 463. Upon the second trial, judgment was rendered in favor of the Tyler Mining Company against all of the defendants in the action. The Last Chance Company sued out a writ of error to this court, and the judgment of the circuit court was affirmed. Last Chance Min. Co. v. Tyler Min. Co., 9 C. C. A. 613, 61 Fed. 557. Thereafter, on application of the Last Chance Mining Company, the case was taken to the supreme court by writ of certiorari, and the judgments of this court and of the circuit court were reversed, and the cause remanded to the latter court, with instructions to grant a new trial. 157 U. S. 683, 15 Sup. Ct. 733. The judgment of the circuit court of appeals was reversed solely upon the ground that it did not give the proper effect to a former judgment establishing priority in favor of the Last Chance claim location. Upon the third trial in the circuit court, judgment was rendered in favor of the Last Chance Company for its costs. The present writ of error is taken to have this judgment reviewed. The diagram referred to in the agreed statement of facts shows the course of the lode or vein lengthwise through the Tyler and Last Chance claims. The ore body in dispute is on the dip of the lode or vein within the extended vertical planes of the end lines of the Tyler claim. It is also within the side lines of the Last Chance claim, and on the dip of the vein as it passes through that claim. The question as to which claim was first located necessarily determines the rights of the respective parties.

When this case was first before this court, we said:

"From the diagram in this case it appears that the lode, in its course lengthwise, crosses the side lines of the Last Chance location at nearly right angles; and, under the rules laid down in the decisions of the supreme court of the United States, the side lines of the location of the Last Chance, as marked on the surface of the ground, are to be treated at its end lines; and the owners thereof would have the exclusive right of possession and enjoyment of such portion of the lode throughout its entire depth, the top or apex of which is inside of the surface lines of the location, as lies between vertical planes drawn downward through such end lines. It therefore appears that both locations were made in such form and shape as has been recognized by the adjudicated cases upon these questions to entitle them to certain fixed and definite rights to follow the lode in its downward course, and the rights of the Tyler Company and of the Last Chance Company in this respect depend upon the question of their priority. * * * In cases of controversy, where the right exists under each valid location to follow the lode in its downward course, it necessarily follows that both locations cannot rightfully occupy the same space of ground; and, in all cases where a controversy of this kind arises, the prior locator must prevail, precisely as in cases of like controversy between locations overlapping

Digitized by Google

each other lengthwise on the course of the lode. This is the rule as announced by the court below upon this branch of the case, and it is, in our opinion, sound, logical, and just, and is sustained by authority. Mr. Justice Field, in Argentine Mining Co. v. Terrible Mining Co., supra, in reviewing an instruction given by the circuit court, said: 'If there was an apex or outcropping of the same vein within the surface of the boundaries of the claims of the defendant, that company could not extend its workings under the Adelaide location, that being of earlier date. Assuming that on the same vein there were surface outcroppings within the boundaries of both claims, the one first located necessarily carried the right to work the vein.' "

In Last Chance Min. Co. v. Tyler Min. Co., 157 U. S. 683, 687, 15 Sup. Ct. 734, the court said:

"The course of this vein is across the Last Chance claim, instead of in the direction of its length. Under those circumstances the side lines of that location become the end lines, and the end the side lines. Mining Co. v. Tarbet, 98 U. S. 463; Argentine Min. Co. v. Terrible Min. Co., 122 U. S. 478, 7 Sup. Ct. 1356; King v. Mining Co., 152 U. S. 222, 14 Sup. Ct. 510."

Upon the agreed statement of facts, the priority of the Last Chance claim is established. This being true, its extralateral rights to follow the lode in its downward course, between vertical planes drawn through its side end lines, is well settled, and the extralateral rights of the Tyler claim cease when the vertical plane drawn downward through the north side end line of the Last Chance claim is encountered. It follows that the court did not err in rendering judgment in favor of the Last Chance Company for its costs, and it is therefore unnecessary to determine what the extralateral rights of the Tyler Company would have been had the lode, when it crossed the southerly side line of the Tyler claim, extended in an easterly, instead of a southerly, direction, as shown in the diagram, or, in other words, "more along than across the lode."

2. It is claimed that the court erred in not allowing costs in favor of the Tyler Company against the Last Chance Company. The argument in support of this position is that the locations of the Republican Fraction claim, the Skookum Fraction, and the Last Chance Fraction, owned by the defendants the Republican and Idaho Mining Companies, were made simply as outposts for the protection of the Last Chance claim, in order to include ground where it was supposed the lode which had its apex in the Last Chance claim might be found; that the said corporations, the Republican and Idaho Mining Companies, were organized, managed, and controlled by the officers and members of the Last Chance Mining Company; that all the work done and performed on all the claims was directed and paid for by the Last Chance Company, and that it was in the actual possession of all the premises sued for by the Tyler Company; that, the Tyler Company having recovered a judgment against the Republican and Idaho corporations for a portion of the lode claimed by it, it is entitled to a judgment for costs against the Last Chance Company, as well as against the other defendants, it being the real party in interest in defending the action. The facts concerning this question were all before the trial court, and, in the very nature of the case, that court would be in a better position to determine the question than this court could possibly be. It is apparent from the facts before us that the real contention of the parties was as to the

Digitized by Google

ownership of the ore bodies found in the Last Chance claim, and with reference to this the final judgment was in favor of the Last Chance Company, and entitled it to recover its costs against the Tyler Company. The record shows that a separate defense was made by three distinct corporations, each claiming to be the owner of separate mining claims. The Tyler Company recovered judgment against two corporations, namely, the Republican and Idaho. In equity cases and in other cases where there are no statutory provisions or rules of practice, the award of costs, as well as the taxation thereof, rests in the sound discretion of the trial court, and will not be reviewed in the appellate court, except in cases of a manifest abuse of such discretion. Kittredge v. Race, 92 U. S. 116, 121; Cole v. Logan, 24 Or. 304, 314, 33 Pac. 568; Woodward v. Baird, 43 Neb. 310, 317, 61 N. W. 612; Wells v. Tolman (Sup.) 34 N. Y. Supp. 840, 843; McChesney v. City of Syracuse, 75 Hun, 503, 508, 27 N. Y. Supp. 508. But "in actions at law it is a general rule that the losing parties, or the parties against whom judgment is rendered, are to pay the costs, and no apportionment of the costs is made between them. Each is liable for all, whatever may be their respective interests in the subject-matter of the suit." Kittredge v. Race, supra. It is unnecessary to determine the question whether there are any circumstances which would change this rule in its application to the taxation of costs in the judgment obtained by the Tyler Company against the Republican and Idaho Mining Companies, as that question is not properly before us for review. We are of opinion that, upon the facts presented in the record, the court did not err in refusing to tax any costs against the Last Chance Company.

3. The last question argued by respective counsel relates to the costs taxed by the clerk in favor of the Last Chance Company. This question is not presented by the record in such a manner as to authorize this court to review the same. Conceding, for the purposes of this opinion, that a writ of error or appeal may be taken in certain cases from the decision of the court affirming or reversing the action of the clerk in taxing costs, yet it is manifest that such writs cannot be taken from the decision of the clerk. The state courts, where the statute permits an appeal to be taken from the taxation of costs, hold that, in order to authorize the appellate court to review the taxation of costs, a motion to retax the costs must first be made in the trial court, and a ruling obtained thereon by that court, to which an exception is duly taken. Real v. Honey, 39 Neb. 516, 520, 58 N. W. 136; Richards v. Borowsky, 39 Neb. 774, 58 N. W. 277; Roberts v. Drehmer, 41 Neb. 306, 310, 59 N. W. 911; Haskell v. Valley Co. (Neb.) 59 N. W. 680. But, whatever the rule may be in the state courts, the question is settled by the rules adopted for the government of the United States courts. The rules of practice of the circuit courts for this circuit provide for the filing of the cost bill, and for the taxation of costs by the clerk, and specify in what manner objections thereto may be made. Rules 17 and 18. Rule 18, among other things, declares that "the taxation of costs made by the clerk shall be final unless modified on appeal as provided in rule 19." Rule 19 provides that "an ap-

Digitized by Google

peal from the decision of the clerk, in the taxation of costs, may be taken to the court, or judge, orally, by either party, instanter, or by motion to retax upon written notice of not less than one nor more than two days, given and filed with the clerk, within two days after the costs have been taxed in the clerk's office, but not afterward." The record shows that the clerk taxed the costs in the case, and disallowed the sum of $6,287.35 in the cost bill of the Last Chance Company; but it is silent upon the subject as to whether any appeal was taken from the decision of the clerk to the judge. This court cannot review the action of the clerk of the circuit court. Under the practice prescribed by the rules, the taxation of the costs as made by the clerk becomes final, unless an appeal is taken therefrom to the court or judge within the time mentioned in rule 19. The law is well settled than an appeal or writ of error does not lie from a judgment or decree as to costs merely. Canter v. Insurance Co., 3 Pet. 307, 319; Fabrics Co. v. Smith, 100 U. S. 110; Wood v. Weimar, 104 U. S. 786, 792; Russell v. Farley, 105 U. S. 433, 437; Machine Co. v. Nixon, Id. 766, 772; Bank v. Hunter, 152 U. S. 512, 516, 14 Sup. Ct. 675; Du Bois v. Kirk, 158 U. S. 58, 67, 15 Sup. Ct. 729; Clarke v. Warehouse Co., 10 C. C. A. 387, 62 Fed. 328, 334. The judgment of the circuit court is affirmed, with costs.

(79 Fed. 282.)

STATE TRUST CO. v. CHEHALIS COUNTY et al.

(Circuit Court of Appeals, Ninth Circuit. February 1, 1897.)

No. 292.

1. TAXATION—ASSESSMENT—OWNERSHIP—RECORD TITLE.
   In ascertaining the ownership of property for the purposes of taxation, the record title, in the absence of actual knowledge, must control. It is unnecessary for the assessing officer to investigate all matters pertaining to the ownership of the property or the validity of the record, but he has the right to act upon the appearance of title as shown by such record.
2. SAME—PERSONAL PROPERTY—BILL OF SALE—MORTGAGE.
   When a bill of sale of personal property, absolute on its face, and apparently conveying the title to such property to the grantee, has been placed on record, and such property has not been listed by the owner to the taxing officer, such officer, acting under a statute requiring him, in the absence of listing by the owner, to make a return from the best information he can obtain, may properly assess such property to the record owner, if he has no actual knowledge of a different ownership; and the validity of the assessment is not affected by proof that the recorded bill of sale was in fact intended as a mortgage, or that the property actually belonged to another person than the grantee.
3. SAME—PROPERTY IN TRANSITU.
   In ascertaining the ownership, for the purposes of taxation, of property actually within a county, but alleged to be merely in transitu, so as to be exempt from taxation within such county, there must be at least an intention and fixed purpose to remove it within a reasonable time; and an intention to remove it at some future time, depending upon certain contingencies which may or may not happen, is wholly insufficient.

In Error to the Circuit Court of the United States for the Western Division of the District of Washington.

Digitized by Google

Doolittle & Fogg and C. W. Hodgdon, for plaintiff in error.

J. R. Bridges, for defendants in error Chehalis county and J. C. Lewis.

Ben Sheeks, for defendant in error Book.

Austin E. Griffiths, for defendants in error Wilson and Weatherwax.

Before GILBERT and ROSS, Circuit Judges, and HAWLEY, District Judge.

HAWLEY, District Judge. This action was brought by the plaintiff in error to recover the value of certain steel rails which it is alleged were wrongfully and unlawfully converted by the defendants in error. The property in question was assessed for taxes in Chehalis county as the property of the plaintiff in error, and was thereafter sold for the nonpayment of the taxes. The defendant Lewis is the treasurer of Chehalis county. The defendants Book, Weatherwax, and Wilson were the purchasers of the property at the tax sale. The court, at the close of the testimony, sustained the motion of defendants to instruct the jury to find a verdict for defendants, by granting a nonsuit.

The record shows that, as the case was presented to the circuit court, the assessment, levy, and sale by the county were virtually conceded to be regular, except upon two points raised by the plaintiff against defendants' motion: (1) That the assessment was not made against the owner of the rails; (2) that the rails were not taxable in Chehalis county. The assessment, levy, and sale were made under the provisions of the statute of Washington of 1893, p. 323 et seq. Under this statute all property, real and personal, is subject to assessment and taxation for state and county purposes on the 1st day of April of each year in which the same shall be listed, unless expressly exempted therefrom. It is made the duty of the owner to list his property and furnish the list to the assessor, and, if he fails to do so, it is the duty of the assessor to ascertain the amount and value of such property, and assess the same at such amount as he believes to be the true value thereof. Section 20 reads as follows:

"The president, secretary or principal accounting officer or agent of any company or association, whether incorporated or unincorporated, except as otherwise provided for in this act, shall make out and deliver to the assessor a sworn statement of its property, setting forth particularly, first, the name and location of the company or association; second, the real property of the company or association, and where situated; third, the nature and value of its personal property. The real and personal property of such company or association shall be assessed the same as other real and personal property. In all cases of failure or refusal of any person, officer, company or association to make such return or statement, it shall be the duty of the assessor to make such return or statement from the best information he can obtain."

There are no provisions in the statute which directly declare that he shall assess the property to the true owner. Section 35 provides that:

"All tools, machinery and material for repairs, and all other personal property of any railroad company, except 'rolling stock,' shall be listed and assessed as personal property in the county wherever the same may be on the first day of April of each year."

Digitized by Google

The facts elicited at the trial were substantially as follows: The rails in question had been a part of the cargo of the steamer Abercorn, which in 1888 was wrecked at North Beach, within the limits of Chehalis county. They were removed from the wreck late in 1891 or early in 1892, and thereafter remained within said county up to the time of their sale for taxes on June 30, 1894. The underwriters bought the rails after the wreck, and in 1891 sold them to A. M. Cannon and Paul Mohr. On November 15, 1892, Cannon and Mohr sold the same to the Columbia Railway & Navigation Company, a corporation organized under the laws of Washington, with its principal office at Tacoma, Pierce county, and having for its principal object (on paper) the building of a railroad on the north side of the Columbia river, and across the interior of Washington. On November 15, 1892, the Columbia Railway & Navigation Company conveyed the same to the State Trust Company, plaintiff in error, by bill of sale therefor, absolute on its face, which was filed for record and duly recorded in the office of the auditor of Chehalis county on the 15th day of June, 1893, in book 10 of Miscellaneous Records. On November 2, 1893, a second bill of sale was executed by the same parties, in terms substantially the same as the first bill of sale, except that the second one had annexed to it the affidavit of A. M. Cannon, president of the Columbia Railway & Navigation Company, to the effect "that this bill of sale was made in good faith, and without any design to hinder, delay, or defraud creditors." This bill of sale was filed for record and recorded in the office of the auditor of Chehalis county on November 25, 1893, in volume 12, Miscellaneous Records. Mr. Bangs, the president of the State Trust Company, testified that "in November, 1892, the State Trust Company was advised by its counsel at Spokane that either the form of the first bill of sale or of the record rendered the execution, delivery, and recording of a new bill of sale desirable." The testimony on the part of the plaintiff was to the effect that the Columbia Railway & Navigation Company was indebted to the State Trust Company for a loan of $50,000; that a note was given for said amount on November 29, 1892, payable eight months after date; that said bills of sale were executed and delivered as collateral security for the payment of said indebtedness, and were intended as confirming the pledge of the rails to the State Trust Company, "and not as a means of transferring the actual title." The plaintiff offered to show that when the second bill of sale was left in the auditor's office a request was made that it be recorded "in the chattel mortgage records, as it was in fact intended by the parties to operate as a mortgage," which testimony, upon objection, was excluded by the court. With reference to the notice given to Mr. Lewis, the county treasurer of Chehalis county, concerning the ownership of the property, Mr. Hodgdon, one of the attorneys for the plaintiff, testified as follows:

"I talked with Mr. Lewis several days before the sale took place, and informed him of the ownership by the Columbia Railway & Navigation Company, and that the State Trust Company had simply a mortgage, and on the morning of June 30th [the day of the sale] I gave him an affidavit which had been made and sent to me by Mr. Cannon as to the ownership of those rails."

Digitized by Google

Mr. Lewis gave his version of the conversation with Mr. Hodgdon as follows:

"I had a conversation with Mr. Hodgdon about the first of June or the last of May in reference to the tax on the rails. * * * I asked him if he was representing the State Trust Company, and he said that he was not, but he was in communication with them, and would notify me whether they would pay the taxes or not."

The following question was then asked by defendants' counsel on cross-examination:

"Q. Mr. Lewis, so far as you know as an officer and as treasurer, who was the owner of these rails in question at the time the tax rolls came into your hands; at the time the levy was made; at the time of the seizure of the property, and the sale of the property?"

To this question plaintiff objected upon the ground that it was incompetent, and the objection was overruled, and the witness answered:

"The State Trust Company of the City of New York."

At the time of the listing of the property for taxation, on April 1, 1893, the State Trust Company was in the possession of the property; was the record owner thereof, by virtue of the first bill of sale, the second not having at that time been executed. Neither Lewis nor any of the county officers had any knowledge as to the ownership otherwise than was obtained from the records.

The following telegram and letters were introduced in evidence:

"New York, 6, 7, 1893.

"To F. D. Arnold, First National Bank, Hoquiam: Take immediate possession of steel rails at So. Aberdeen and Cosmopolis for State Trust Co. of New York (bill of sale executed by Columbia Ry. and Navigation Co. mailed to-day), and draw for expenses. The State Trust Company. 36 Wall St., N. Y."

"The State Trust Company.

"No. 36 Wall St., New York, June 7, 1893.

"F. D. Arnold, Esq., Pres. First National Bank, Hoquiam, Wash.—Dear Sir: We telegraphed you to-day to take possession of 1,901 tons of steel rails located at South Aberdeen and Cosmopolis for this company. We inclose herewith bill of sale of the Columbia Railway and Navigation Company to us for the above property. Please keep possession for us, and only deliver or allow the rails to be removed on our order. * * * Please give this matter your immediate attention, as expedition is all-important under the circumstances.

"Yours, very truly, Andrew Mills, Pt."

In a subsequent letter of July 10, 1893, to Mr. Arnold, by the secretary, the company said:

"We are this morning in receipt of your two favors of July 1st and 3rd; the latter containing the notice as to our ownership of the rails. We agree with you that we do not think it is necessary to keep a man all the time watching the rails. * * * We assure you that we appreciate the kind services rendered by you in this connection, and for what you have done you have our thanks. We hope that you will keep yourself advised of any movements in regard to the moving of the rails, or of their in any way being disturbed."

Thereafter the following notice was posted upon the rails:

"Notice.

"Notice is hereby given that these rails, and all rails taken from the Abercorn wreck, are the property of the State Trust Company of New York.

"State Trust Company,
"F. D. Arnold, Agent."

Digitized by Google

The bill of exceptions shows that:

"In the opening statement of counsel for plaintiff, he said that the rails in question had not been assessed to their owner, the Columbia Railway & Navigation Company, as required by law, but that they had been erroneously assessed, levied upon, and sold by Chehalis county as the property of the State Trust Company, which was not owner, but only a mortgagee thereof; that said assessment, levy, and sale were void because the property had not been assessed to, levied on, and sold as the property of the owner; for the further reason that the same was not assessable by or in Chehalis county. These were the grounds, and the only grounds, upon which counsel, in his opening statement, predicated the invalidity of said assessment, levy, and sale; and these were the only grounds upon which the invalidity of the assessment, levy, and sale was contended for by plaintiff on the argument on the motion for nonsuit, as well as in his opening statement."

It is therefore affirmatively shown, as before stated, that there were only two points urged at the trial against defendants' motion: (1) That the rails were not assessed to, nor sold as the property of, the owner; that the bills of sale executed to the State Trust Company were mortgages only, and that the property in question still belonged to the Columbia Railway & Navigation Company. (2) That the property was not taxable in Chehalis county, because (a) it was in transitu; (b) it, being the property of the Columbia Railway & Navigation Company, a corporation of the state of Washington, with its principal place of business in Pierce county, was not taxable in Chehalis county.

Did the court err in granting a nonsuit? The law is well settled that the owner of property for the purpose of taxation is the person or corporation having the legal title thereto. Tracy v. Reed, 38 Fed. 69, 74; Miner v. Pingree, 110 Mass. 47; Richardson v. City of Boston, 148 Mass. 508, 20 N. E. 166; Augusta Bank v. City of Augusta, 36 Me. 255; Augusti v. Bank, 46 La. Ann. 530, 15 South. 74; Vance v. Corrigan, 78 Mo. 94. The rails in question were not listed by the owner to the assessor as the law required. He was compelled to act upon the best information obtainable. In ascertaining the ownership of property for the purposes of taxation under such circumstances, the record title, in the absence of actual knowledge, must control. It is unnecessary for the assessing officer to investigate all matters pertaining to the ownership of the property or of the validity of the record. He has the right to act upon the appearances of the title to the property as shown by the records. It does not devolve upon him to test the validity of the title deeds or documents in order to ascertain the name of the owner. The authorities upon this subject clearly show that the appearance of the title, as shown by the record, and the evidence, in the present case, were sufficient to maintain the validity of the assessment. The North Cape, 6 Biss. 505, 515, Fed. Cas. No. 10,316; Finney v. Boyd, 26 Wis. 366, 371; French v. Spalding, 61 N. H. 395, 402; Mason v. Bemiss, 38 La. Ann. 935, 938; Puget Sound Agriculturial Co. v. Pierce Co., 1 Wash. T. 159, 168; Butler v. Stark, 139 Mass. 19, 29 N. E. 213; Jones v. Town of Bridgeport, 36 Conn. 283. As was said by Blodgett, J., in the North Cape, the—

"Officers charged with the assessment and collection of taxes are not required to look into the secret ownership of personal property. They do their

Digitized by Google

duty when they assess the property against the apparent owners as shown by possession or muniment of title."

In Augusti v. Bank, the court, in discussing a similar question, said:

"Titles that are intrinsically null, if permitted to remain unquestioned, may become the basis of an assessment that will result in a valid sale. Any other ruling upon this point would compel the assessor to investigate titles and ascertain as to their conclusive validity. This was never contemplated by the law. The evidence of a prima facie title is the requirement."

Persons who own the property at the time of the assessment are the proper ones upon whom the tax should be imposed, irrespective of any prior or subsequent change of ownership. 25 Am. & Eng. Enc. Law, 121, and authorities there cited.

It is unnecessary to consider the objection urged against the ruling of the court in permitting Lewis to testify that the State Trust Company was the owner of the property, or to the ruling of the court excluding the request to have the second bill of sale recorded in the Book of Chattel Mortgages, for the reason that such rulings, even if erroneous, would not have changed the result. Migeon v. Railway Co., 23 C. C. A. 156, 77 Fed. 249, and authorities there cited; Haley v. Elliott (Colo. Sup.) 38 Pac. 771. The notice given to Lewis by Hodgdon was insufficient to invalidate the assessment. No notice whatever was given to the purchasers of the rails at the tax sale to the effect that the State Trust Company was not the owner of the property. If the assessing officer had the right to act upon the appearances of title as manifested by the conduct of the State Trust Company, and as shown by the records, then it matters not who the real owner was.

The cases cited by plaintiff are so great in number as to render it impracticable to attempt any extended review of them. Many of them have no reference whatever to tax cases. Others relate to street assessments, in which much stricter rules prevail than in the collection of taxes due to the state and county government. Numerous cases are cited where there was a positive statute directing the assessment to be made in the name of the true owner of the property; and in such cases, where it appeared that the name of the true owner could readily have been ascertained by searching the record, or was known to the assessing officer, and the property was assessed to other persons, the assessments have in many instances been declared void.

Other questions have been discussed at great length which have no special application to the facts in this case; for instance, upon the general principle that parol evidence in certain cases is admissible for the purpose of proving that an absolute bill of sale was given as a chattel mortgage. A treatise is written upon the law of estoppel, and all the authorities upon this subject have been collected and cited in the brief. Every case should be disposed of upon its own merits, with special reference to the questions raised in the court below.

The various authorities cited by plaintiff from the supreme court of Washington are not adverse to the views we have expressed.

Digitized by Google

In Vestal v. Morris, 11 Wash. 452, 39 Pac. 960, the land was assessed in the name of one Burns, while one Bartlett was the owner, and the county officers had knowledge at the time of the assessment that Bartlett was the owner of the land; and the court held that under the statute then in force "the failure to assess the property in the name of the known owner was a substantial failure to comply with the law." In Baer v. Choir, 7 Wash. 631, 634, 32 Pac. 776, and 36 Pac. 286, certain lands were assessed to one Knight, and sold for the payment of the taxes due thereon. The court held that under certain provisions of the statute, which were quoted, it was clear that it was the intention of the law of 1871 that unusual care should be taken in the matter of assessing real estate to the owners thereof. In the course of the opinion the court said:

"Were there nothing in this case but the recital of the deed that the property had been assessed to Knight as owner, the presumption of the regularity of all former proceedings would carry the presumption that the assessment to him had been properly made by the officer. But the record shows that, although Knight had been the owner, he had conveyed by a recorded deed in 1870; that for the years 1873 and 1874, at least, the lots had been assessed to Mrs. Bonnell; and that Mrs. Bonnell did not convey until 1889; and this showing was sufficient to rebut the presumption which the deed raised."

In Voorhies v. Hennessy, 7 Wash. 243, 34 Pac. 931, the court held that an attachment could not be levied upon property held by the debtor as mortgagee under a bill of sale absolute on its face, although the officer may have had no notice of the true relation of the debtor to the property. This is an authority only upon the general point that in a certain class of cases it is permissible to allow parol evidence for the purpose of proving that an absolute bill of sale was given as a chattel mortgage. It is enough to say that such a rule has no application to tax cases, especially under statutes similar to the statute of Washington, and upon the particular facts as shown in this case. The taxing power is an incident to sovereignty, the exercise of which belongs exclusively to the government and attaches to all property which comes within its jurisdiction, and the statutes of a state should never be construed in such a manner as to defeat the right of the government "by any subtle device or ingenious sophism whatsoever." Cooley, Tax'n, 272–274; Board v. Anderson, 15 C. C. A. 471, 68 Fed. 341.

In Waddingham v. Dickson, 17 Colo. 223, 29 Pac. 177, the court said:

"The payment of taxes is a duty which property holders owe to the government. If they neglect this duty, they have no right to expect relief from the courts on account of merely technical errors on the part of the public officers, where no substantial right has been lost or impaired."

This was said in a case involving the sale of real estate for taxes.

"Certainly a more stringent rule is not required in case of a tax sale of personal property. Meritorious objections affecting substantial rights, when properly made to appear, should always be heeded, but mere hypertechnical objections should not be countenanced in the administration of justice. Such is the trend of modern legislation, and such should be the aim of judicial decisions." Haley v. Elliott (Colo. Sup.) 38 Pac. 771, 773.

Digitized by Google

The contention of plaintiff's counsel, as set forth in his brief, that:

"These rails had been purchased by the Columbia Railway & Navigation Company, with which to construct its railway around The Dalles, and they were en route to their point of destination; the transit having begun by taking the rails from a ship stranded on the Pacific coast, and transporting them, at a cost of more than $2,000, across the land to Gray's Harbor, thence across the harbor, and up the Chehalis river to the railroad, by which they were to be ultimately carried another stage on their way to The Dalles. This is fully proven, and not disputed. The cause of their delay at Cosmopolis does not appear, but so long as it remained the owner's intent to carry them forward on a transit already commenced, in legal contemplation, so long as they continue to be in transitu. This intent being once shown, it is presumed to continue until the contrary is made to appear,"

—cannot be sustained. The rails were originally shipped for the purpose of building a railroad outside of Chehalis county. The wrecking of the cargo of the Abercorn in 1888 ended their voyage. They were towed from the wreck late in 1891 or early in 1892 to Cosmopolis and South Aberdeen, in Chehalis county, and there remained within the limits of the county until the sale for taxes. The bills of sale of the rails were recorded in that county. A portion of the rails was sold by the plaintiff in error to different parties in 1894, and the proceeds applied to the reduction of the loan made by it to the railway company. In June, 1893, information reached the State Trust Company that creditors of A. M. Cannon, of Spokane, were threatening to attach the rails under claim that Mr. Cannon had an interest in them. Mr. Mohr was consulted, and it was agreed that in order to protect the interest of the railway company and State Trust Company, and prevent removal of the rails by outside parties, Mr. F. D. Arnold, then the president of the First National Bank of Hoquiam, should be asked to take charge of the rails and see that they were not removed. A request to that effect was sent to Mr. Arnold, requesting him not to permit the rails to be removed. He put a watchman in charge. This was before the second bill of sale was recorded. The property was not in transitu. It had not been started upon its journey to any other place. In brief, there was nothing in the conduct of the parties in possession of the rails, or any one else, intimating any intention whatever to remove the same or any part thereof from Chehalis county. From the time the rails were landed from the wreck they were in such a situation as to make them a part of the property within Chehalis county, and it was the duty of the assessing officer of said county to assess the rails therein. In order to constitute property in transitu, there must be at least an intention and fixed purpose to remove it within a reasonable time. An intention to remove the rails at some future time, depending upon certain contingencies which might or might not happen, is wholly insufficient. C. N. Nelson Lumber Co. v. Town of Loraine, 22 Fed. 54; Hill v. Graham, 72 Mich. 659, 667, 40 N. W. 779; Carrier v. Gordon, 21 Ohio St. 605, 609; Winnipiseogee Paper Co. v. Town of Northfield (N. H.) 29 Atl. 453. In Carrier v. Gordon the court said:

"To say that the simple purchase of the property with an intention to remove it would relieve it from liability to taxation would be to make its liability depend upon the mere intention of the owner, and subject to change as

Digitized by Google

often as the owner changed his intention. There would be no safety or certainty in such a rule. The safer and better rule is the one indicated,—to consider the property actually in transit as belonging to the place of its destination, and property not in transit as property in the place of its situs, without regard to the intention of the owner, or his residence in or out of the state."

See, also, Cooley, Tax'n, 98, and authorities there cited; State v. Dalrymple (N. J. Sup.) 28 Atl. 671; Chicago, B. & Q. R. Co. v. Hitchcock Co. (Neb.) 59 N. W. 358; State v. William Deering & Co. (Minn.) 57 N. W. 313.

The court did not err in granting a nonsuit. The judgment of the circuit court is affirmed, with costs.

(79 Fed. 291.)

DENVER & R. G. R. CO. v. LORENTZEN.

(Circuit Court of Appeals, Eighth Circuit. March 1, 1897.)

No. 810.

1. REVIEW ON ERROR—BILL OF EXCEPTIONS.
   The circuit court of appeals will not review the action of a trial court in failing to direct a verdict for a plaintiff or defendant on issues of fact or on a mixed issue of law and fact, unless the bill of exceptions affirmatively shows that it contains all the evidence.
2. NEGLIGENCE—PERSONAL INJURIES—INSTRUCTIONS.
   It is not error for the court, in an action for personal injuries brought by a woman, to call the jury's attention to the possible bearing of her sex upon the question of contributory negligence, and to permit them to determine, in view of her sex and all the surrounding circumstances, whether she exercised such care as was reasonably to be expected from her.
3. TRIAL—WEIGHT OF EVIDENCE—INSTRUCTIONS.
   The giving of an instruction that positive evidence is entitled to more weight than negative always rests largely in the discretion of the court, and it is certainly not error to decline to give such instruction in a case in which witnesses have testified as positively on the one side that a thing did not occur as on the other side that it did.
4. NEGLIGENCE—PERSONAL INJURIES—LIABILITY FOR MEDICAL ATTENDANCE.
   The liability of a defendant, through whose negligence a plaintiff has been injured, for the plaintiff's doctors' and nurses' bills, rests upon the ground that they were rendered necessary by the defendant's neglect of duty, and is not altered, whatever arrangement the plaintiff may have made for the payment of such bills, or whether he ever pays them.

In Error to the Circuit Court of the United States for the District of Colorado.

Henry F. May (Edward O. Wolcott and Joel F. Vaile with him on the brief), for plaintiff in error.

Charles Hartzell, for defendant in error.

Before CALDWELL, SANBORN, and THAYER, Circuit Judges.

THAYER, Circuit Judge. This is a suit to recover damages for injuries sustained at a railroad crossing by Mrs. Anna Marie Lorentzen, the defendant in error, who was the plaintiff below. Mrs. Lorentzen was riding in a public conveyance, termed a "hack," which was

Digitized by Google

in charge of a driver, from the station of the Denver & Rio Grande Railroad Company, in Palmer Lake, Colo., to the station of the Atchison, Topeka & Santa Fé Railroad Company, in the same town or village. The two stations were some distance apart, and, on the route taken, it was necessary to drive across the track of the Denver & Rio Grande Railroad Company at some distance from its depot. While crossing the defendant's track, the vehicle in which she was riding was struck and overturned by an outgoing train of the defendant company, as the plaintiff below alleged, because of the neglect of the engineer on the outgoing train to ring the bell or sound the whistle. There was some controversy in the trial court as to whether the engineer and fireman in charge of the engine did neglect to ring the bell, as to whether the driver of the hack was not solely responsible for the accident, and as to whether the plaintiff herself was not chargeable with contributory negligence. At the conclusion of the evidence, the defendant asked the court to determine each of these questions as a matter of law, by directing a verdict for the defendant. The court declined to so charge, and an exception was saved, which is the first error to which our attention is directed. We are precluded, however, from considering the alleged error, for the reason that the bill of exceptions does not affirmatively show that it contains a report of all the testimony. The rule is well settled, at least in this court, that we will not review the action of a trial court in failing to direct a verdict for a plaintiff or a defendant on issues of fact, or on a mixed issue of law and fact, unless the bill of exceptions affirmatively shows that it contains all the evidence. Taylor-Craig Corporation v. Hage, 32 U. S. App. 548, 16 C. C. A. 339, and 69 Fed. 581; Association v. Robinson, 36 U. S. App. 690, 20 C. C. A. 262, and 74 Fed. 10.

In the course of its charge, the trial court used the following language:

"Probably we would not exact the same degree of care and diligence from a woman that we would from a man under the same circumstances. I am inclined to think that, if this plaintiff were a man suing for a recovery, I should be constrained to advise you that he could be no more relieved from the duty of looking out for the train than the driver of the wagon; but this plaintiff being a woman, a person who is not accustomed, or very much accustomed, to such places, and to going in this fashion from one depot to another, I think it is a matter fairly for your consideration whether she used the care and diligence which should be expected of a person in her situation, in going across this road."

An exception was taken to the aforesaid language, whereupon the court further instructed the jury as follows:

"I do not state that to you, gentlemen, as a matter of law or proposition of law, but simply as a matter for your consideration. I want you to consider whether there is less diligence to be exacted or expected from a woman than would be expected from a man. In fact, I am not considering any of these propositions as matters of law. I am merely explaining them for you to find and pass upon. The facts are with you, gentlemen, and not with the court."

The exception first taken is insisted upon, notwithstanding the explanatory remarks of the court. We think, however, that the exception is not well founded. Considering all that was said, it appears that the jury was left at liberty to determine, as it had an undoubted

Digitized by Google

right to do, whether, in view of the plaintiff's sex and all the surrounding circumstances, she exercised such care and diligence as should reasonably be expected of her. This was the proper test by which to determine if she was guilty of any contributory fault.

The trial court was asked to charge, with reference to the evidence concerning the ringing of the bell, "that positive evidence is entitled to more weight than negative evidence." It declined to do so, and such action on its part is assigned for error. It is doubtless very proper to advise a jury, when such an instruction is asked, and the facts warrant it, that greater weight ought to be attached to statements of witnesses who claim to know or to have observed that on a given occasion a certain thing was done than to the statements of witnesses who are only able to say that they did not observe or have no recollection that the act was done. But in the case at bar the record discloses that two witnesses for the plaintiff below testified no less positively than the witnesses for the defendant that, on the occasion of the accident, the bell on the engine was not sounded as the train approached the crossing. It was wholly unnecessary, therefore, in the case in hand, to give an instruction relative to the comparative weight of positive and negative testimony, and the refusal of such an instruction constitutes no ground for complaint. In any event, the giving of an instruction of that nature is a matter which rests largely in the discretion of the trial judge. It should be made to appear very clearly that, in the particular case, such an instruction was necessary, before the refusal of a request of that kind should be held to be reversible error.

It is finally assigned for error that the trial court, in its charge, permitted the plaintiff to recover for certain doctors' and nurses' bills which she had incurred, although she did not testify that she had herself paid them, and although, at one stage of her testimony, she remarked, incidentally, that her brothers were paying her expenses. Whether they were paying the particular expenses in question, or whether, if they were paying them, they were doing so in expectation of being reimbursed by the plaintiff, she did not state. It is apparent, we think, that this exception is without merit. The liability of the defendant company for the expenses in question rested upon the ground that they were rendered necessary by its neglect of duty, and that liability was not altered, no matter what arrangement the plaintiff may have made for their payment, or whether she ever pays them. City of Indianapolis v. Gaston, 58 Ind. 227; Klein v. Thompson, 19 Ohio St. 571; Pennsylvania Co. v. Marion, 104 Ind. 239, 3 N. E. 874. It is not apparent from this record that the doctors' and nurses' bills which the plaintiff incurred are not a legal charge against her, which she may be compelled to pay. The judgment of the circuit court is affirmed.

Digitized by Google

(79 Fed. 294.)

NEW ENGLAND FURNITURE & CARPET CO. v. CATHOLICON CO.

(Circuit Court of Appeals, Eighth Circuit. March 1, 1897.)

No. 814.

1. REVIEW ON ERROR—EXCEPTION TO REFUSAL OF INSTRUCTIONS.
An exception taken in gross to the refusal of a long series of instructions is of no avail in an appellate court, if some of such instructions were clearly erroneous, and ought not to have been given.

2. SAME—EXCEPTIONS TO CHARGE.
Exceptions to a charge to the jury, not taken until after the jury has retired, will not be noticed on appeal, especially where the objections to the charge are of such a nature that they might have been remedied had the court's attention been called to them at the proper time.

In Error to the Circuit Court of the United States for the District of South Dakota.

Louis A. Merrick (Ambrose N. Merrick with him on the brief), for plaintiff in error.

Chambers Kellar (Andrew J. Kellar with him on the brief), for defendant in error.

Before CALDWELL, SANBORN, and THAYER, Circuit Judges.

THAYER, Circuit Judge. This is an action in replevin, which was brought by the Catholicon Company, the defendant in error, against the New England Furniture & Carpet Company, the plaintiff in error, hereafter called the "Furniture Company," to recover the possession of certain hotel furniture. The property in controversy was originally bought by the Catholicon Hot Springs Company of the furniture company, in February, 1893, and two notes, aggregating $1,750, made by third parties, were indorsed and delivered to the furniture company in part payment therefor, the understanding being that the residue of the purchase money, about $1,000, should be paid within 30 days thereafter. In April, 1893, the furniture in controversy was sold and delivered by the Catholicon Hot Springs Company to a new corporation, the Catholicon Company, which is the present defendant in error. In May, 1893, after the last-mentioned sale, the furniture company and the Catholicon Hot Springs Company entered into a written agreement, which, as it is claimed, embodied the terms of the verbal agreement that was made when the furniture in question was originally sold. The legal effect of this agreement was that the furniture company was to retain the title to the property contracted to be sold until the purchase price was fully paid. It was under the latter contract, made after the property had been sold by the original purchaser to the new company, the present defendant in error, that the furniture company, on the trial of the case, laid claim to the property. The testimony contained in the record tends to show that shortly after the defendant in error bought the property it was advised by the furniture company that the amount due to it on account of the sale to the Catholicon Hot Springs Company was

Digitized by Google

only $1,057.55; that it paid this sum to the furniture company in October, 1893, and thereby obtained a good title to the property. It appears, however, that the furniture company did not succeed in collecting the notes amounting to $1,750, which it had originally accepted in part payment for the furniture, and that in December, 1894, it succeeded in obtaining possession of the property, and shortly thereafter made an attempt to remove the same secretly from the state of South Dakota, whereupon the present action was brought by the Catholicon Company. The trial, which was before a jury, resulted in a verdict in its favor. None of the exceptions to the admission and exclusion of evidence which were taken at the trial have been argued in the brief of the plaintiff in error, and apparently they are not relied upon as a ground for the reversal of the judgment. We have examined them, however, in so far as errors of this class are properly assigned and presented, in accordance with the provisions of rules 11 and 24 of this court (21 C. C. A. cxii., xcix., 78 Fed. cxii., xcix.), and we find them to be without merit.

The defendant below requested the court to give 11 instructions, all of which were refused, although the substance of some of the instructions was embraced in the court's charge to the jury. The exception which was saved to the refusal of these instructions was taken in gross to the refusal of all, and, as some were clearly bad, we cannot notice the alleged error. It is well settled that an exception taken to a charge as a whole, or to a long series of instructions, which does not point out the particular error complained of, will not be of any avail in an appellate court, unless the charge as a whole, or the instructions as a whole, were erroneous. The same rule applies to an exception taken in gross to the refusal of a long series of instructions. If some of them were clearly erroneous, and ought not to have been given, the trial court, on an exception to the refusal of all, will not be adjudged to have committed an error. Price v. Pankhurst, 10 U. S. App. 497, 3 C. C. A. 551, and 53 Fed. 312; Association v. Lyman, 18 U. S. App. 507, 9 C. C. A. 104, and 60 Fed. 498; Railway Co. v. Spencer, 36 U. S. App. 229, 18 C. C. A. 114, and 71 Fed. 93.

Exceptions were taken, or at least an attempt was made to take exceptions, to some portions of the charge given by the trial court; the main objection thereto being, as it seems, that portions thereof were contradictory, and liable to confuse and mislead the jury. The record shows, however, as we understand it, that the objections to the charge were made after the jury had retired from the bar. It has been held by the supreme court and by this court on several occasions that the fact that exceptions are not taken until after the jury has retired is a good and sufficient reason for refusing to notice the same on appeal. Phelps v. Mayer, 15 How. 160; Bracken v. Railroad Co., 12 U. S. App. 421, 5 C. C. A. 548, and 56 Fed. 447; Park v. Bushnell, 20 U. S. App. 425, 9 C. C. A. 138, and 60 Fed. 583. The case at bar seems to be a proper one in which to apply the rule last stated, as the main objection made to the charge was of such a nature that it might have been remedied had the court's attention

Digitized by Google

been called to it at the proper time. Finding no error in the record that would justify a reversal of the cause, the judgment of the circuit court is affirmed.

(79 Fed. 296.)

UNITED STATES NAT. BANK v. FIRST NAT. BANK OF LITTLE ROCK et al.

(Circuit Court of Appeals, Eighth Circuit. March 1, 1897.)

No. 823.

1. BANKS AND BANKING—REDISCOUNTS.
   A rediscount by a bank of its bills receivable, though it indorses the same, and becomes contingently liable for their payment, is not a borrowing of money by the bank, but has more the characteristics of a sale.
2. SAME—POWERS OF PRESIDENT—INDORSEMENT OF PAPER.
   It is within the scope of the implied powers of the president of a bank to indorse negotiable paper in the ordinary transaction of the bank's business, and a special authority to that end need not be conferred by the board of directors.
3. SAME—CUSTOM OF REDISCOUNTING.
   When a bank has long been in the habit of rediscounting its bills receivable in large amounts, all other banks in the same locality pursuing the same practice, and the president and cashier of such bank propose to its regular correspondent a rediscount of its bills, and there are no circumstances attending such proposal to arouse suspicion, the bank to which it is made may safely act upon it, without further inquiry, on the assumption that the act has either been specially authorized, or that the officers are acting within the purview of their general powers.
4. SAME—KNOWLEDGE OF DIRECTORS—ESTOPPEL.
   When the directors of a bank have known for many months that its paper was being rediscounted in large amounts, under the president's direction, and without consulting the board, and that the money so obtained was being used in the business of the bank, and they have made no inquiry as to how the paper was indorsed, the bank is estopped to dispute the authority of the president to indorse such paper for rediscount.
5. WRIT OF ERROR—DISMISSAL—INDORSEMENT OF FILING.
   A writ of error, which has been allowed, served, and returned to the appellate court with the transcript of the proceedings in the trial court, will not be dismissed because the clerk of the trial court has inadvertently failed to make an indorsement of its filing on the writ itself. Insurance Co. v. Phinney, 22 C. C. A. 425, 76 Fed. 617, disapproved.

In Error to the Circuit Court of the United States for the Eastern District of Arkansas.

John Fletcher (W. C. Ratcliffe with him on the brief), for plaintiff in error.

Sterling R. Cockrill (Ashley Cockrill with him on the brief), for defendants in error.

Before SANBORN and THAYER, Circuit Judges, and LOCHREN, District Judge.

THAYER, Circuit Judge. This is the second writ of error which has been sued out in this case by the United States National Bank of New York, the plaintiff in error, hereafter termed the "New York Bank." When the case was here formerly (13 C. C. A. 472, 64 Fed.

Digitized by Google

985), we decided that the notes on which the suit is brought were in such form, and were so indorsed, when they were tendered to the New York Bank for discount, as to create the presumption that they were the property of the First National Bank of Little Rock, the defendant in error, hereafter termed the "Little Rock Bank," and that they had been acquired by the latter bank in the usual course of business, for value. We further held that this presumption was confirmed by the correspondence between the two banks relative to the discount of the notes, and that an instruction given by the trial court on the first trial was erroneous which told the jury, in substance, that the notes bore upon their face evidence which should have satisfied the New York Bank that they belonged to H. G. Allis, the president of the Little Rock Bank; that he was discounting paper which belonged to himself, and was using the name of the Little Rock Bank as an indorser for his own accommodation.

The facts proven on the second trial do not differ in any material respect from those proven on the first trial, and do not alter the conclusions announced in our former opinion. The New York Bank was the Eastern correspondent of the Little Rock Bank. Between June 21, 1892, when business transactions between the two banks commenced, and December 13, 1892, when the notes in suit were tendered for discount, the New York Bank had discounted, from time to time, for the Little Rock Bank, as the necessities of its business required, paper to the amount of about $175,000, the proceeds of which the Little Rock Bank had received and used. The application for the discount of the notes in suit was made both by W. C. Denney and H. G. Allis, who were, respectively, the cashier and the president of the Little Rock Bank, in letters which clearly showed that the discount was sought for and in behalf of the bank; and the reasons stated for asking the discount were such as would naturally disarm suspicion, namely, that the bank's customers were not shipping and selling their cotton, but were waiting for higher prices, which compelled the bank to rediscount some of its bills receivable. Besides, the cashier of the Little Rock Bank acknowledged the receipt of the proceeds of the notes in suit when they had been placed to the bank's credit by its Eastern correspondent. It must be held, therefore, that the record made on the last trial discloses no defense which should preclude the New York Bank from recovering against the Little Rock Bank as an indorser of the notes in suit, notwithstanding the fact that H. G. Allis, the president of the latter bank, did wrongfully appropriate the proceeds of the rediscount, unless it be true, as contended, that the plaintiff bank could not lawfully deal with the officers above named in the matter of rediscounting paper without first ascertaining that they had been authorized by the board of directors to rediscount the notes in controversy, and that the president had been authorized to indorse them.

The second trial of the case was conducted on the theory, which was embodied in the charge of the trial court, that a rediscount by a bank of its bills receivable, where the paper is indorsed, consti-

Digitized by Google

tutes a borrowing of money by the bank; and that the president of a national bank, by virtue of his office, has no power to indorse its commercial paper, or to rediscount its bills receivable. Proceeding from these postulates, the trial court further instructed the jury, in substance, that there was no evidence that the president of the defendant bank had any actual authority to indorse and rediscount the notes in suit; and that, before there could be a recovery, the plaintiff bank must show affirmatively that the board of directors of the defendant bank either knew that its president had previously exercised the power of indorsing and rediscounting its bills receivable, or that he had been permitted, without their actual knowledge, to exercise such powers, through a series of transactions such as would amount to a custom to do so, or else that the board of directors had negligently permitted him to carry on such a course of dealing with the plaintiff bank as to induce the latter to believe that the board of directors of the defendant bank had conferred upon the president thereof the power to indorse and rediscount its bills receivable. To all of these instructions exceptions were taken, and they constitute the errors to be reviewed.

We are of opinion that that part of the aforesaid charge which declared that a rediscount by a bank of its bills receivable, if it indorses the same, is a borrowing of money, and that part which declared, in substance, that the president of a national bank has no implied power to indorse its commercial paper, were erroneous. There is an obvious difference between a transaction where a bank goes into the market as a borrower, giving its own notes, bills, or other obligations for the money borrowed, and a transaction where it disposes of the notes and bills of third parties which it has previously discounted. In the former case it becomes primarily bound; it is the principal debtor; while in the latter, even if it indorses the paper, it only incurs a contingent liability, which may never ripen into an absolute obligation to pay. The latter transaction has more, if not all, of the characteristics of a sale, and it is generally regarded as a sale whereby assets of a certain kind are converted into cash. It may be said that a bank or an individual borrows money when they execute their own notes or bills, and receive the money thereon from a third party, even though the interest to accrue is deducted in advance, in the form of a discount. But we can see no propriety in characterizing the transaction as a borrowing of money, when a person or a corporation sells commercial paper made by third parties, which they happen to own. There are some authorities, it is true, which maintain that the president of a bank has no implied power to bind the bank by an indorsement of commercial paper, and that, when an indorsement by the president is relied upon as transferring a title thereto, a special authority to indorse must be shown. Smith v. Lawson, 18 W. Va. 212, 228; Bank v. Hamlin, 14 Mass. 178, 180; Gibson v. Goldthwaite, 7 Ala. 281, 293. But we think the weight of reason and authority is in favor of the view that it is within the scope of the implied powers of the president of a bank to indorse negotiable paper in the ordinary transaction of the bank's business, and that

Digitized by Google

a special authority to that end need not be conferred by the board of directors. Such implied power is generally conceded to bank cashiers, and we know of no sufficient reason why the implied powers of the chief executive officer of a bank should be more limited in this respect than those of its cashier. Bank v. Smith, 23 C. C. A. 80, 77 Fed. 129, 135; Fleckner v. Bank, 8 Wheat. 338, 360; Wild v. Bank, 3 Mason, 505, Fed. Cas. No. 17,646; Bank v. Perkins, 29 N. Y. 554, 569; Cooke v. Bank, 52 N. Y. 96, 114, 115; Bank v. Wheeler, 21 Ind. 90; Merchants' Bank v. State Bank, 10 Wall. 604, 650. It can hardly be expected that the cashier of a bank will be in attendance on all occasions when it becomes necessary for the bank to indorse notes and bills, draw drafts and checks, certify checks, or issue certificates of deposit. Such transactions as these are of hourly occurrence in all banks located in large business centers, and the exigencies of business demand that the power to perform such acts should be vested in some other officer as well as in the cashier. Our observation teaches us that such power is very generally exercised by bank presidents; and in ordinary transactions, no layman, we think, would hesitate to accept negotiable paper which had passed through a bank, because it was indorsed by the president, rather than by the cashier. In its practical operation the rule that a bank president has no implied power to indorse commercial paper for and in behalf of his bank would seriously interfere with the transaction of business, and put the public to great inconvenience, while it would have no marked tendency to prevent fraud or breaches of trust on the part of bank officers. The public interest requires that the same presumptions should attend an indorsement made by the president of a bank which exist in favor of an indorsement made by a cashier, and that banks should be held bound by acts of that nature when done by either of such officers in the ordinary course of business. Aside from these considerations, we think that it has been settled, so far as the federal courts are concerned, by the decision in People's Bank v. National Bank, 101 U. S. 181, that the president of a national bank, by virtue of his office, does possess the power to bind his bank by a contract of indorsement or guaranty, made in the usual course of business. It was held in that case, where the vice president of a national bank, contemporaneously with a sale of certain notes to another bank, guarantied their payment, that the latter bank could rightfully presume, without inquiry, that the vice president had authority to execute the guaranty. And the same doctrine has been approved by some of the state courts. Thomas v. Bank (Neb.) 58 N. W. 943; Palmer v. Bank, 78 Ill. 380; Thomp. Comm. Law Corp. § 4621.

We turn at this point to consider one of the most important questions in the case, and that is whether the transaction in controversy, to wit, the rediscounting of the notes in suit, was an act so far outside the sphere of ordinary banking as to impose upon the New York Bank the duty of ascertaining that the president and cashier of the Little Rock Bank had been duly authorized by its board of directors to rediscount the paper in question. That the power to rediscount its bills receivable was vested in the defendant bank admits of no controversy.

Digitized by Google

The act, therefore, was not ultra vires. Bank v. Sharp, 6 How. 301, 322, 323; Bank v. Smith, 23 C. C. A. 80, 77 Fed. 129, 135; Bank of Genesee v. Patchin Bank, 13 N. Y. 309; Marvine v. Hymers, 12 N. Y. 223; Houghton v. Bank, 26 Wis. 663; West St. Louis Sav. Bank v. Shawnee Co. Bank, 95 U. S. 557, 559; Cooper v. Curtis, 30 Me. 488, 490; Davenport v. Stone (Mich.) 62 N. W. 722. In Bank v. Armstrong, 152 U. S. 346, 14 Sup. Ct. 572, it was decided that the borrowing of money by a national bank is such an unusual proceeding that when persons or corporations are solicited by a bank president to loan money to his bank they "must see to it" that the requisite authority to borrow money has been conferred by the board of directors. But the decision referred to did not go beyond that point, and, as we have already held that the conversion of bills receivable into cash by rediscounting them differs essentially from borrowing money, it is not a controlling authority in the case at bar. We are not left in doubt by the present record as to the practice of the defendant bank in the matter of rediscounting negotiable paper. The evidence shows, without contradiction, that it had long been in the habit of rediscounting its bills receivable in large amounts; that all other banks doing business in the same locality pursued the same practice, and that the demand for money at certain seasons of the year, usually in the summer and fall, made it necessary to convert a portion of their bills receivable into cash by selling them in the East. The plaintiff bank offered to prove by the official report of the comptroller of the currency that the amount of rediscounted paper held by national banks at various times between March 1, 1892, and January 1, 1893, ranged from $8,500,000 to $17,132,497, the largest amount being held in September, 1892, but the trial court rejected such proof. We think, however, that, notwithstanding the rejection of this proof, we must presume that the practice which was shown to exist among the banks located in Little Rock and in that vicinity prevails in other sections of the country, inasmuch as the defendant bank offered no testimony tending to show that banking operations are conducted differently in that region than they are elsewhere, or that the practice of rediscounting paper is confined to that locality. The laws of trade are generally uniform in their operation, and the same causes which at certain seasons of the year occasion a greater demand for money and a dearth of currency in one section of the country, doubtless produce the same results, at certain seasons, in other sections. It is the duty of banks to make all reasonable efforts to supply their customers with money for all legitimate business purposes. To that end it is their right to exercise all of their corporate powers, including the power to rediscount. On some occasions, if this latter power was not freely and speedily exercised, a bank would be derelict in the discharge of its obligations to the public. One of the most useful functions which banks perform is to equalize the distribution of money, and make the supply in their respective localities satisfy, as far as possible, the demands of trade and commerce, by withdrawing money, as the occasion requires, from those financial centers where it has a tendency to accumulate. It is obvious

Digitized by Google

that this function can be best performed by banks by selling or rediscounting a portion of their bills receivable in those places where money is most abundant and cheap; and we have no doubt that it is usually so performed, and that many banks throughout the country are in the habit, at certain seasons of the year, of replenishing their stock of money by such means. It results from these considerations that we are unable to assent to the proposition that the rediscounting by a bank of its negotiable paper is a transaction so far outside the scope of ordinary banking transactions as to impose upon the bank buying such paper the duty of ascertaining that the act has been specially authorized by the board of directors. If, as in the present case, the proposal to rediscount emanates from the president and cashier of a bank, and is made to its regular correspondent, and there are no circumstances attending the transaction which are calculated to arouse suspicion, we think that the bank to which the proposal is addressed may safely act on the propositon without further inquiry, on the assumption that the act has either been specially authorized, or that the officers from whom the proposition emanates are acting within the purview of their general powers.

But, whether the conclusion last announced be sound or unsound, we are satisfied, in either event, that in the present case the defendant bank is estopped from asserting, as against the plaintiff bank, that its president had no authority to indorse and rediscount its negotiable paper. It is a fact which admits of no controversy that for many months prior to the transaction in question the president of the Little Rock Bank had been in the habit of rediscounting its bills receivable, as the exigencies of business demanded. Reference has already been made to the fact that during the six months preceding the rediscount of the notes in suit, rediscounts had been obtained from the New York Bank to the amount of about $175,000, the proceeds of which the Little Rock Bank had received and used. This power, it seems, had been exercised with the knowledge and concurrence of the cashier of the Little Rock Bank, but without any formal action having been taken by its board of directors. All of the directors, however, who testified at the trial, admitted, in substance, that they were aware that the bank had been in the habit of obtaining rediscounts. Indeed, a report made to the comptroller of the currency on July 12, 1892, which was read in evidence, and was sworn to by three of the directors, showed the amount of rediscounted notes and bills then outstanding and held by other banks to be $81,748.80. Under these circumstances, it is quite immaterial that three of the directors testified that they were not aware that the president had ever been authorized to indorse and rediscount its bills receivable. They did know that paper was being rediscounted in large amounts under the president's direction without consulting the board, and that the bank was using in its daily business transactions the money so obtained. Knowing this fact, it was their duty to inquire and to ascertain in what way paper was being rediscounted, whether by the indorsement of the cashier or by the president, if they considered the mode of indorse-

Digitized by Google

ment of any importance. By their silence and acquiescence they ratified the practice of obtaining rediscounts which the president had seen fit to adopt, and remitted the whole matter to his judgment and discretion. The president was, in effect, held out to the world, or at least to those banks with which he dealt, as having the powers which he assumed to exercise; and in a controversy between one of such banks, with which he had large dealings, and the defendant bank, the latter will not be heard to deny such authority. Merchants' Bank v. State Bank, 10 Wall. 604, 645, 646; Butler v. Cockrill, 36 U. S. App. 702, 712, 20 C. C. A. 122, and 73 Fed. 945, and cases there cited; Farmers' & Mechanics' Bank of Kent Co. v. Butchers' & Drovers' Bank, 16 N. Y. 125, 134, 135.

But one other point remains to be noticed, and that is the contention of counsel for the defendant bank that the writ of error should, in any event, be dismissed, for the reason that the writ itself does not bear an indorsement by the clerk of the trial court to the effect that it was filed in that court. The writ of error, as contained in the record, shows that it was allowed by the trial judge, and that service thereof was acknowledged by counsel for the defendants in error on June 20, 1896, the judgment having been rendered on May 28th of that year. The writ of error is returned to this court by the clerk of the trial court as a part of the transcript of the proceedings in that court. It is obvious, therefore, that the writ of error was lodged with the clerk of the trial court as the law requires, and that he has treated it as filed, and obeyed the order therein contained. Under these circumstances, the plaintiff in error has done all that the law requires him to do to obtain a review of the proceedings of the trial court, and its rights should not be sacrificed because the clerk has failed, inadvertently, to note the filing of the writ of error by an indorsement made on the writ itself. It is very likely that the filing of the writ of error is shown by the journal of the proceedings of the trial court on the day the writ was lodged with the clerk, and under the circumstances we may well presume that the fact does thus appear. We have examined the decision in the case of Insurance Co. v. Phinney, 22 C. C. A. 425, 76 Fed. 617, to which our attention has been directed, but we are not able to concur in the view that seems to have been entertained by the majority of the judges in that case. We think it is altogether the more reasonable view that the substantial requirements of the law are satisfied when the record shows that the writ of error was actually lodged with the clerk, and that it is the lodgment of the writ with that officer, rather than the notation of the filing, which renders it operative.

It results from what has been said that in several important respects, as heretofore indicated, the jury were misdirected, to the prejudice of the plaintiff in error. In view of the undisputed facts which the record discloses, we think that the plaintiff bank was entitled to a judgment in its favor, and that at the conclusion of the evidence the trial court should have so declared, The judgment of the circuit court is accordingly reversed, and the cause is remanded for a new trial.

Digitized by Google

(79 Fed. 313.)

UNITED STATES v. ROESSLER & HASSLACHER CHEMICAL CO.

(Circuit Court of Appeals, Second Circuit. February 23, 1897.)

1. CUSTOMS DUTIES—CLASSIFICATION—ACETANILID.
   Acetanilid, a chemical compound prepared from coal tar, not a color or dye, and principally used in the arts, in the manufacture of dyestuffs, though also used in medicine, is dutiable under paragraph 19 of the tariff act of 1890, as a preparation of coal tar, and not under paragraph 75, as a medicinal preparation, or paragraph 76, as a chemical compound, not specially provided for. 71 Fed. 957, affirmed.

2. CONSTRUCTION OF TARIFF LAWS—MEANING OF WORDS, ETC.
   When words used in a tariff act have some peculiar trade meaning, congress must be assumed to have used them with the meaning they had when inserted in the act; but when a descriptive phrase is used, having no peculiar trade meaning, such as "medicinal preparations," the articles designated by such phrase will be such as from time to time come within its meaning, and not solely those meant by it at the time of the passage of the act.[1]

Appeal from the Circuit Court of the United States for the Southern District of New York.

This is an appeal from decision of the circuit court, Southern district of New York, reversing a decision of the board of general appraisers which affirmed the classification of certain imported merchandise for customs duties by the collector of the port of New York. 71 Fed. 957. The facts are set forth in the opinion. The importations were entered in 1893, under the McKinley tariff act of October 1, 1890.

Jas. T. Van Rensselaer, for the United States.
Albert Comstock, for appellee.

Before WALLACE, LACOMBE, and SHIPMAN, Circuit Judges.

LACOMBE, Circuit Judge. The article in question is a chemical compound, known as "acetanilid." It is prepared from aniline oil, a product of coal tar, by treatment with carbolic acid, and derives its characteristics purely from coal tar, the acetic acid being merely a medium for its manufacture. It contains no alcohol. Some of the entries were classified for duty under paragraph 75, others under paragraph 76, while the importers claimed that all of their importations should have been classified under paragraph 19. These three paragraphs read as follows:

"(75) All medicinal preparations, including medicinal proprietary preparations, of which alcohol is not a component part, and not specially provided for in this act, twenty-five per centum ad valorem; calomel and other mercurial preparations, thirty-five per centum ad valorem.

"(76) Products or preparations known as alkalies, alkaloids, distilled oils, essential oils, expressed oils, rendered oils, and all combinations of the foregoing, and all chemical compounds and salts not specially provided for in this act, twenty-five per centum ad valorem."

"(19) All preparations of coal tar, not colors or dyes, not specially provided for in this act, twenty per centum ad valorem."

---

[1] As to the rules for interpreting trade and commercial terms in tariff laws, see note to Dennison Manuf'g Co. v. U. S., 18 C. C. A. 545.

Digitized by Google

From the description of acentanilid above set forth, it is manifest that it is a chemical compound, and also a preparation of coal tar, while both sides concede that it is not a color or dye. It is therefore within the description of both paragraphs 76 and 19. If acetanilid be covered by the provisions of the third paragraph above quoted, this would settle the question, since manifestly the designation "all preparations of coal tar not colors or dyes" is more specific than the general descriptions "all chemical compounds" or "all chemical salts." U. S. v. Roessler & Hasslacher Co., 1 U. S. App. 305, 4 C. C. A. 1, and 56 Fed. 481; U. S. v. Matheson, 1 U. S. App. 308, 4 C. C. A. 3, and 56 Fed. 482.

The first question to be determined, then, is whether the article in question is a "medicinal preparation," within the meaning of paragraph 75; and, if that question be answered in the negative, further inquiry will be unnecessary. The board of general appraisers, in their decision as to some of the entries, found that acetanilid "is manufactured and used exclusively as a medicinal preparation"; and they refer, in both their decisions touching these importations, to an earlier decision of May 4, 1891, in which they find that "acetanilid is known as a medicinal preparation, and is, we believe, exclusively used as a medicine." None of the evidence on which these findings are based has been returned, but, when this case was in the circuit court, testimony bearing upon that point was taken. From that testimony it appears that acetanilid, at the time of importation, was very extensively used in the formation of para-nitraniline, which is a body employed extensively in the development of scarlet, crimson, and orange colors in cotton fiber. It was also formerly used very extensively in the production of what is known as flavaniline, a yellow dyestuff, which has recently been superseded by other colors possessed of more desirable characteristics. It is also used as a medicine, when reduced to a dry crystalline powder. It comes in larger and smaller crystals, and it is, of course, more convenient to obtain the powder from the smaller crystals. That the chief or predominant use of acetanilid is in the arts, and not in medicine, is quite clear upon the proof; and, under familiar principles of construction, such use is controlling of its classification. It is contended, however, that we are not to consider its chief use at the time of importation, but its chief use at and immediately prior to the date of the passage of the act. The proof shows that for a year or two prior to October, 1890, the manufacture of flavaniline had fallen off, while the manufacture of para-nitraniline had not developed to its more recent extent. There was therefore a brief period immediately prior to the passage of the act when the use of acetanilid in medicine was more extensive relatively to its use in the arts than it is to-day. When we remember the small quantities in which it is dispensed by the physician, and the comparatively large quantities in which it must be used, when used at all, by the dyer, this testimony, which is largely inferential, is not entirely satisfactory; but conceding the fact to be that, when the act was passed, the chief use of acetanilid was medicinal, that fact does not settle its dutiable status for all time. There is no question here of commercial designation. It is not disputed that the words "medicinal preparations" have,

Digitized by Google

and always have had, the same meaning in trade and commerce as in common speech. They are descriptive, and refer to substances used in medicine, and prepared for the use of the apothecary or physician, to be administered as a remedy in disease. When words used in a tariff act have some peculiar trade meaning, it must, of course, be assumed that congress used them with the meaning they had when they were inserted in the act, not with some new meaning acquired afterwards; and therefore in such cases the only competent testimony is such as tends to prove what that meaning was when congress used the words. But this principle does not apply when an article of importation is to be classified according to its use, when the question is whether it shall be included within a descriptive phrase, which differentiates what it describes from all other articles, not by a commercial or a common name or by component materials, but by the use to which the article is put. When congress provided, in October, 1890, that "medicinal preparations" should pay 25 per cent., it certainly did not mean that an article which was not then used in medicine should continue to be classified as not within this paragraph, although, two years after the act was passed, its sole use had come to be medicinal; nor that an article used solely as a medicine when the act was passed should continue within this paragraph after all such use might cease. What the paragraph does cover is all articles not otherwise specially provided for whose chief use (if not their sole one) is medicinal, and this question of use is to be determined as of the time of importation. Since we are satisfied that the chief use of acetanilid is in the arts, and not in medicine, the decision of the circuit court is affirmed. This decision, however, does not apply to the variety of acetanilid which is known as "antifebrine," and, in the form of powder, seems to be put up specially as a proprietary remedy.

(79 Fed. 315.)

GRACE et al. v. COLLECTOR OF CUSTOMS OF PORT AND DISTRICT OF SAN FRANCISCO.

(Circuit Court of Appeals, Ninth Circuit. February 8, 1897.)

No. 321.

CUSTOMS DUTIES—CLASSIFICATION—HOCK BOTTLES.

Empty pint wine bottles, commercially known as "hock bottles," are dutiable under the final clause of paragraph 88 of the tariff act of 1894, at 40 per cent. ad valorem, and not under the second clause, at 1¾ cents per pound, as vials holding not more than one pint, and not less than one-quarter of a pint.

Appeal from the Circuit Court of the United States for the Northern District of California.

The only question before the court upon this appeal involves the interpretation of paragraph 88 of the Wilson tariff act of August 28, 1894. It appears from the record that in the month of May, 1895, appellants imported into the port of San Francisco 50 cases, containing in all 14,400 bottles, invoiced as "empty pint wine bottles," which on June 28, 1895, the local appraisers returned as "colored glass bottles holding not more than one pint and not less than one-quarter of a pint." On July 9, 1895, the collector liquidated the duty thereon at the rate of 1⅛ cents per pound, being the rate provided for under the sub-

Digitized by Google

divisions of paragraph 88, Schedule B, of the tariff act of August 28, 1894, "for vials holding not more than one pint and not less than one-quarter of a pint." The duty so levied was paid by appellants, who thereafter protested against said classification and liquidation, as follows: "The grounds of our objection are that paragraph 88 levies a duty of one and one-eighth cents per pound only on vials holding not more than one pint and not less than one-quarter of a pint, other than vials which are a particular kind of glass bottle used by druggists and chemists. We therefore claim that the bottles under protest are dutiable under paragraph 88 * * * as 'other * * * colored glassware, at the rate of forty per cent. ad valorem,' or as 'other * * * colored * * * bottle glassware not specially provided for in said act, at the rate of three-quarters of one cent per pound." On September 5, 1895, the board of United States general appraisers rendered its decision denying said protest, from which decision an appeal was duly taken to the circuit court for this circuit. On June 18, 1896, the circuit court affirmed the decision of the board of general appraisers. Among other things, the court found that "said glassware consists of what is known commercially as 'hock bottles.' The articles are known as 'bottles,' and not as 'vials,' and the term 'bottle' is a general name applied to glass vessels, while the term 'vial' is more generally understood to be a kind of bottle—a small bottle—used principally by druggists and chemists." And from this finding of fact the court found, as a conclusion of law, that "the merchandise in question was dutiable upon its importation at the rate of one and one-eighth cents per pound, under paragraph 88 of the act of August 28, 1894." In the arguments of counsel, the attention of the court is directed to the similarity, or want of similarity, between paragraphs 103 and 104 of the McKinley tariff act of October 1, 1890, and paragraph 88 of the Wilson tariff act. For convenient reference, these acts are here placed in parallel columns:

McKinley Act.

"Glass and Glassware:

"103. Green and colored, molded or pressed, and flint and lime glass bottles holding more than one pint, and demijohns and carboys (covered or uncovered), and other molded or pressed green and colored and flint or lime bottle glassware, not specially provided for in this act, one cent per pound. Green and colored, molded or pressed, and flint and lime glass bottles, and vials holding not more than one pint and not less than one-quarter of a pint, one and one-half cents per pound; if holding less than one-fourth of a pint, fifty cents per gross.

"104. All articles enumerated in the preceding paragraph if filled, and not otherwise provided for in this act and the contents are subject to an ad valorem rate of duty, or to a rate of duty based upon the value, the value of such bottles, vials or other vessels shall be added to the value of the contents for the ascertainment of the dutiable value of the latter; but if filled and not otherwise provided for in this act, and the contents are not subject to an ad valorem rate of duty, or to rate of duty based on the value, or are free of duty, such bottles, vials or other vessels shall pay, in addition to the duty, if any, on their contents, the rates of duty prescribed in the preceding paragraph: provided, that no article manufactured from glass described in the preceding paragraph shall pay a less rate of duty than forty per centum ad valorem."

(26 Stat. 571.)

Wilson Act.

"Glass and Glassware:

"88. Green and colored, molded or pressed, and flint and lime glass bottles holding more than one pint, and demijohns and carboys, covered or uncovered, whether filled or unfilled, and whether their contents be dutiable or free, and other molded or pressed green and colored and flint or lime bottle glassware, not specially provided for in this act, three-fourths of one cent per pound; and vials holding not more than one pint and not less than one-quarter of a pint, one and one-eighth cents per pound: if holding less than one-fourth of a pint, forty cents per gross; all other plain, green and colored, molded or pressed, and flint lime and glassware, forty per centum ad valorem."

(28 Stat. 513.)

Digitized by Google

Charles A. Garter and J. F. Evans, for appellants.
Samuel Knight, Asst. U. S. Atty., for appellee.

Before GILBERT and ROSS, Circuit Judges, and HAWLEY, District Judge.

HAWLEY, District Judge (after stating the facts as above). Paragraph 88 of the Wilson tariff act, considered as a whole, without reference to paragraphs 103 and 104 in the McKinley tariff act, is susceptible of but one construction. It will be observed that it is divided into three distinct and separate subdivisions, each of which, in the language used, is plain, clear, and definite, and entirely free from ambiguity, doubt, or uncertainty. To interpret it, independent of other acts, would simply be to copy it. It would be construed to mean just what it says. The duty on bottle glassware mentioned in the first subdivision is "three-fourths of one cent per pound." The duty, in the second subdivision, on vials "holding not more than one pint and not less than one-fourth of a pint," is "one and one-eighth cents per pound," and, if holding less than one-fourth of a pint, "forty cents per gross." The third subdivision provides that all other articles of glassware, viz. "all other plain, green and colored, molded or pressed, and flint, lime and glassware," shall pay a duty of "forty per centum ad valorem." The articles of glassware upon which the duties were levied were invoiced as empty pint wine bottles, and consisted of what are commercially known as "hock bottles." It is evident that duties thereon could not be levied under either the first or second subdivision, and should be levied under the "catch-all" clause in the third subdivision. This is the interpretation that should be given to paragraph 88 of the Wilson tariff act, considered independently of the provisions of paragraphs 103 and 104 of the McKinley tariff act.

But it is contended by appellee that paragraph 88 of the Wilson act is practically a condensation and re-enactment of paragraphs 103 and 104 of the McKinley act, with a reduction of duties and a slight change of verbiage. Viewed in this light, it is claimed that paragraph 88 of the Wilson act provides for the same kind of glass bottles, holding more than a pint, which, with other glassware, as set forth in paragraph 103, are dutiable at three-fourths of a cent a pound; that the foregoing kinds of glass bottles and other glassware, with vials of the capacity mentioned, are, under the Wilson act, dutiable at $1\frac{1}{8}$ cents a pound; that the term "vials," in paragraph 88, should be taken in connection with the glass bottles and other bottle glassware of the preceding clause (viz. the first subdivision); that it would then read identically the same as the corresponding part of paragraph 103, except as to the rate of duty imposed; that the province of the conjunction "and," preceding the term "vials," in paragraph 88, is to connect the two clauses together as one. We are of opinion that paragraph 88, if it is to be construed with reference to the former act, is not fairly susceptible of this interpretation. By a reference to the McKinley tariff act, it will be observed that paragraph 103 is divided into two subdivi-

Digitized by Google

sions only; that the first subdivision ends with providing for the same articles of glassware as the first subdivision in paragraph 88; that the second subdivision of paragraph 103 commences with the words "green and colored, molded or pressed, and flint and lime glass bottles" (which are at the commencement of the first subdivision), and then proceeds "and vials," etc., thus making its construction clear and plain, viz.: Glass bottles holding more than one pint are dutiable at one cent per pound; glass bottles and vials holding not more than one pint, and not less than one-fourth of a pint, "one and one-half cents per pound," and, if holding less than one-quarter of a pint, "fifty cents per gross." To give to paragraph 88 the construction claimed for it by appellee, we would have to insert into the second subdivision of paragraph 88, before the words "and vials," the words omitted from it, and found in paragraph 103, namely, "green and colored, molded or pressed, and lime glass bottles," or, at least, the words "glass bottles." This we are not authorized to do. It is our duty to interpret, not to make, the law. Words should not be interpreted into a statute, in order that it may include a case which has been omitted, merely because there seems to be no good reason why it should have been omitted. Denn v. Reid, 10 Pet. 524, 527. As was said by Mr. Justice Story in Smith v. Rines, 2 Sumn. 338, Fed. Cas. No. 13,100: "It is not for courts of justice, proprio marte, to provide for all the defects or mischiefs of imperfect legislation." See also, U. S. v. Breed, 1 Sumn. 159, Fed. Cas. No. 14,638; Hobbs v. McLean, 117 U. S. 579, 6 Sup. Ct. 870.

The argument that, because the second subdivision is connected with the first by the conjunction "and," would bring them together, so that it should be read as one clause or subdivision, does not commend itself to our favor. While it is true that the McKinley act and the Wilson act are similar in many respects, it is also true that they are essentially different in others, which will readily be seen upon a comparison of both acts, and need not here be pointed out. The omission in paragraph 88 of the words used in paragraph 103 of the McKinley act demands that a different interpretation should be given to the Wilson act. The words omitted were not useless. It is not to be presumed that congress intended to class demijohns and carboys with vials; hence, the McKinley act properly repeated the character of bottles mentioned in the first subdivision which were to be classed with vials if holding less than one pint, which made the paragraph, as an entirety, sensible and clear. It is, of course, the duty of courts to search for light in whatever legal direction it may be found, which in its nature and character is trustworthy and capable of conveying to the judicial mind a clear and satisfactory answer. The rule of construction which requires courts to look into former acts upon the same subject, in order to ascertain the meaning of doubtful phrases or provisions, is a wise and salutary one. In this manner, courts often ascertain the words used in a statute to be analogous to the use of the same words in previous statutes, and, when so used in such connection and surroundings as to limit their meaning beyond question to a certain inter-

Digitized by Google

pretation, that interpretation should be followed. This rule of construction often requires gaps left in the act, not amounting to casus omissi, to be filled from the materials supplied by other statutes upon the same subject, and in harmony with them. But this general rule necessarily carries with it certain limitations. This is made manifest from the obvious considerations which lie at the bottom of the rule itself. Where the words and terms of the statute under consideration are different from those in which they are used in other acts upon the same subject, the general rule is not applicable. In other words, where the language of the statute to be construed is clear, plain, and explicit, it should not be controlled by the rule in pari materia.

In Goodrich v. Russell, 42 N. Y. 177, 184, the court said:

"It is true that statutes relating to the same subject are to be construed together; but this rule does not go to the extent of controlling the language of subsequent statutes by any supposed policy of previous ones."

It is also true that, where the words of the statute to be construed differ from the words of a former act on the same subject, it is an intimation, at least, that they are to have a different construction.

It is argued on behalf of appellee that congress intended to fix a higher rate of duty upon small bottles than upon large ones, and that inasmuch as small bottles holding not more than one pint, and not less than one-quarter of a pint, are not otherwise specifically provided for, it must have been the intention of congress to class them with vials. If such was the intention of congress, it is fair to presume that words would have been inserted in an appropriate place to accomplish that result. If the term "vial" could be construed to mean glass bottle, the contention of the appellee should be sustained. The circuit court found as a fact that the articles are known as "bottles," and not as "vials," and that the term "bottle" is the general name applied to a glass vessel, while the term "vial" is more generally understood to be a kind of bottle used principally by druggists and chemists. This being true, the rule of law steps in, and declares that in such cases the commercial designation must be given controlling effect. Robertson v. Salomon, 130 U. S. 412, 9 Sup. Ct. 559; U. S. v. Breed, 1 Sumn. 159, Fed. Cas. No. 14,638; Nichols v. Beard, 15 Fed. 436, 437; Morrison v. Arthur, 13 Blatchf. 194, Fed. Cas. No. 9,842; In re H. B. Claflin Co., 2 C. C. A. 647, 52 Fed. 121; U. S. v. Herrman, 5 C. C. A. 582, 56 Fed. 477; Lawrence v. Allen, 7 How. 785, 797; Arthur v. Morrison, 96 U. S. 108; Arthur v. Lahey, Id. 112; Worthington v. Abbott, 124 U. S. 434, 8 Sup. Ct. 562; Twine Co. v. Worthington, 141 U. S. 468, 12 Sup. Ct. 55; Lutz v. Magone, 153 U. S. 105, 108, 14 Sup. Ct. 777.

In Worthington v. Abbott, the merchandise in controversy was rolled iron in straight flat pieces about twelve feet long, three-eighths of an inch wide, and three-sixteenths of an inch thick, slightly curved on their edges, and were made for the special purpose of making nails, known in commerce as "nail rods." The duties thereon were liquidated under section 2504, Rev. St., which imposed a duty of one cent and one-half on "bar iron rolled or hammered, com-

Digitized by Google

prising flats less than three-eighths of an inch or more than two inches thick, or less than one inch or more than six inches wide." The contention of the importers was that the duties should have been liquidated under the "catch-all" clause: "All other descriptions of rolled or hammered iron not otherwise provided for, one cent and one-fourth per pound." The court said:

"Although the article in the present case was in straight, flat pieces, less than one inch in width, and less than three-eighths of an inch in thickness, yet it is distinctly found that it had not been bought or sold as 'bar iron,' and was not known in a commercial sense as 'bar iron.' Therefore, although in one sense it might properly have been called 'iron in bars,' it was not 'bar iron,' although it was rolled iron. It was known in commerce as 'nail rods,' and it is found that in a commercial sense 'nail rods' were not known as 'bar iron.' The article therefore was a description of rolled iron 'not otherwise provided for.' The commercial understanding as to the description of the article by congress must prevail."

It is suggested that the debates in congress when paragraph 88 was adopted sustain the construction given by the circuit court. A reference to the congressional record of May 20, 1894 (page 5976), simply shows that Senator Aldrich was of opinion that, if it was intended to have the like effect as the McKinley act, it was necessary to insert certain words before the words "and vials," so that it would appear that it was the intention of congress to make "a connection between the two classes of glassware." Senator Jones, of Arkansas, thought there ought to be no difficulty about the construction, and said the intention was "to connect the two branches of the paragraph." In construing any act of congress, the court may recur to the history of the times when it was passed, in order to ascertain the reason for, as well as the meaning of, particular provisions in it; but the views of individual members in debate, or the motive which induced them to vote for or against the passage, cannot be considered. Aldridge v. Williams, 3 How. 9, 24; U. S. v. Union Pac. R. Co., 91 U. S. 72; District of Columbia v. Washington Market Co., 108 U. S. 243, 254, 2 Sup. Ct. 543; County of Cumberland v. Boyd, 113 Pa. St. 52, 57, 4 Atl. 346; Leese v. Clark, 20 Cal. 389, 425; Taylor v. Taylor, 10 Minn. 108, 126 (Gil. 81); Keyport & M. Steamboat Co. v. Farmers' Transp. Co., 18 N. J. Eq. 13, 24.

In Aldridge v. Williams, the court, in interpreting a provision of the tariff act of March 2, 1833, which was not free from doubt, said:

"In expounding this law, the judgment of the court cannot in any degree be influenced by the construction placed upon it by individual members of congress in the debate which took place on its passage, nor by the motives or reasons assigned by them for supporting or opposing amendments that were offered. The law, as it passed, is the will of the majority of both houses, and the only mode in which that will is spoken is in the act itself, and we must gather their intention from the language there used, comparing it when any ambiguity exists with the laws on the same subject, and looking, if necessary, to the public history of the times in which it was passed."

In Leese v. Clark, Field, J., in delivering the opinion of the court, said:

"It is evident that the opinions expressed by individual legislators upon the object and effect of particular provisions of an act under discussion are entitled to very little weight in the construction of the act. The intention of the legis-

Digitized by Google

lature must be sought in the language of the act, and the object expressed or apparent on its face, and not by the uncertain light of a legislative discussion."

The contention of the appellee cannot be sustained. The judgment of the circuit court is reversed, and cause remanded for further proceedings in accordance with the views expressed in this opinion.

(79 Fed. 325.)

GIBBON v. LOEWER SOLE-ROUNDER CO.

(Circuit Court of Appeals, Third Circuit. February 15, 1897.)

1. PATENTS—INVENTION—CUTTING IRREGULAR FORMS.
   The production of a sole-cutting machine, consisting of the combination of a rotary cutter and its shaft on a fixed frame, with revolving clamps to hold the rough material mounted on a shaft on a movable carriage, and a revolving form operating to vary the relative positions of the cutter and the material, involves no invention, being a mere carrying forward of the Blanchard invention, for turning or cutting irregular forms.
2. SAME—INFRINGEMENT—SOLE-CUTTING MACHINES.
   In the Loewer and Blair patent, No. 407,735, for an improved sole-cutting machine, the main idea is a mere application of the Blanchard invention for turning or cutting irregular forms, and the only novelty resides in the double drive gear applied to the three-part shaft; hence the patent is not infringed by a machine which omits this feature. 74 Fed. 555, reversed.

Appeal from the Circuit Court of the United States for the Eastern District of Pennsylvania.

This was a suit in equity by the Loewer Sole-Rounder Company against Charles S. Gibbon for alleged infringement of a patent for an improved sole-cutting machine. In the circuit court the patent was adjudged valid and infringed as to claims 1, 4, 5, 6, 9, and 14 (74 Fed. 555), and the defendant has appealed.

Edmund Wetmore and E. E. Wood, for appellant.
George B. Selden, for appellee.

Before ACHESON, Circuit Judge, and BUTLER and WALES, District Judges.

ACHESON, Circuit Judge. The bill in this case charges the defendant, Charles S. Gibbon, with the infringement of letters patent No. 407,735, issued on July 23, 1889, to Henry Loewer and Barton L. Blair, for "an improved sole-cutting machine." The claims of the patent alleged to be infringed by the defendant are the 1st, 4th, 5th, 6th, 9th, and 14th. These claims are as follows:

"(1) In a sole-cutting machine, the combination, with the revolving cutter, C, and its shaft, of the revolving sole clamps, E, E', their supporting shafts, the movable carriage, and a revolving form operating to vary the relative position of the cutter and the sole clamps, substantially as described."

"(4) In a sole-cutting machine, the combination, with the revolving cutter, C, and its shaft, and guide, s, of the revolving sole clamps, E, E', clamp-plates, z, z', removable form, f, and suitable supporting shafts, substantially as described.

"(5) In a sole-cutting machine, the combination, with the revolving cutter, C, and its shaft, and guide, s, of the revolving and traveling sole clamps, E, E',

Digitized by Google

form f, suitable supporting shafts, and movable blank guide, T, substantially as described.

"(6) In a sole-clamping machine, the combination, with the revolving cutter, C, and its shaft, and guide, s, of the revolving and traveling sole clamps, E, E', suitable supporting shafts, and movable blank guide, T, provided with adjustable plate, y', substantially as described."

"(9) In a sole-cutting machine, the combination, with the main frame, A, A', supporting the revolving cutter, C, and its shaft, and the guide, s, of the movable frame, D, carrying the revolving sole clamps, E, E', and form, F, and mechanism adapted to secure the simultaneous revolution of the sole clamps and the form, substantially as described."

"(14) In a sole-cutting machine, the combination, with the revolving cutter, C, and its shaft, provided with the spring guard, S, of the guide, s, and the revolving sole clamps, E, E', form, F, and suitable supporting shafts, substantially as described."

In considering this case, it is first to be noted that the art of cutting shoe soles by machinery was practiced long before Loewer and Blair entered this field of invention. The prior patents to Thompson, Addy, Smith, and Hartford show machines, operated by hand or power-driven, for trimming or cutting shoe soles to pattern, on and off the shoe, by a rotary cutter in some instances, and by a straight knife in other instances, and the employment of flat-faced clamps to hold the leather blanks; and the prior patents to Joyce, King & Strong and others show heel-trimming machines comprising a rotary cutter and a guide, a pattern plate, and a movable frame containing clamping members, between which the heel is held when turned by the hand of the operator against the cutter.

We find in the testimony of the complainant's principal expert (Mr. Osgood) a general description of the machine of the Loewer and Blair patent in the words following, namely:

"It consists of a machine in which a pile of leather blanks is placed between clamps, and moved up so as to bring their edges in contact with a rapidly revolving cutter head, which, as the blanks are slowly turned, trims off the surplus leather. The clamps are attached to a swinging frame, and the cutter head to a stationary frame. A pattern of the same outline as the soles to be produced is attached to the swinging frame, and rides against the edge of a guide wheel on the stationary frame. The contact of the pattern with the guide wheel throws the swinging frame forward and back, giving corresponding motion to the blanks held by the clamps, and causing the cutter head to cut the soles exactly to the form of the pattern."

This description enumerates the essential members and qualities of the complainant's machine (the Loewer and Blair machine), the features not here mentioned being the mere details of construction.

Now, it is quite evident that, in combination of essential parts, in principle and in mode of operation, the complainant's machine is identical with the ingenious machine invented and patented by Thomas Blanchard,—but by reason of the expiration of the patent now open to public use,—for turning or cutting irregular forms by using a model in conjunction with a blank, the outline of the model guiding the cutting tool to produce a duplicate from the blank. The Blanchard machine, as described in his specification and as long practically employed in the art to which it belongs, comprises a rotary cutter mounted on bearings on a stationary frame, and a guide wheel in alignment therewith, and a swinging frame carrying a model or pattern, and the rough material to be trimmed or turned, in such relations that, when power is applied

Digitized by Google

to rotate the shafts, the swinging frame is yieldingly pressed towards the cutter and guide wheel, the pattern by its engagement with the guide wheel limiting the movement of the material towards the cutter, so that as the pattern and material are rotated the cutter trims off the periphery of the material so as to conform it exactly to the shape of the pattern. This machine is designated in Blanchard's patent as "Blanchard's Self-Directing Machine," and is declared to be available "for turning or cutting irregular forms out of wood, iron, brass, or other material or substance which can be cut by ordinary tools."

In reproducing such irregular forms as shoe lasts, which vary in cross-sectional shape from point to point throughout their length, the cutter and guide wheel are required to travel lengthwise of the material and pattern, and this lateral movement Blanchard provided for by a longitudinal feed mechanism; but when the particular work to be done does not require such lateral movement, then, obviously, this feed mechanism may be disused or omitted altogether from the machine. As the feed mechanism is not needed in the work contemplated by Loewer and Blair, we find that it is left out of their machine. That omission, however, does not change the principle or the character of the machine.

In his patent Blanchard illustrates his machine as engaged in such work as the cutting of a shoe last, and appropriate devices for securely holding the material and model are described. The specification, however, discloses that the machine has the capacity of cutting and reproducing an "infinite variety of forms" out of any material or substance which can be cut by ordinary tools. The scope of the invention, then, is such that changes in the subordinate devices for holding the material while under the action of the cutter, to suit the particular work, are necessarily involved in the varying use of the Blanchard machine, and are within the intendment of the patent. Howe Mach. Co. v. National Needle Co., 134 U. S. 388, 397, 10 Sup. Ct. 570. Such mechanical adaptations involve merely the substitution of equivalents, and generally would call into exercise nothing beyond the commonest mechanical skill.

Clearly, leather is a material or substance within the scope of Blanchard's specification, and it cannot be doubted that the cutting of leather blanks, separately or in a bunch of many thicknesses, is but the application of the Blanchard machine to one of its legitimate uses. "The inventor of a machine is entitled to all the uses to which it can be put, no matter whether he had conceived the idea of the use or not." Ansonia Brass & Copper Co. v. Electrical Supply Co., 144 U. S. 11, 18, 12 Sup. Ct. 601. Here, the patent having expired, all the uses to which the machine can be put are free to the public. Of course, the use of the machine in sole cutting involves the employment of a clamping device suitable to hold flat leather blanks, and for that purpose the natural selection—the one which, we think, would occur to any mechanic possessing the ordinary skill of his calling—would be the common flat-faced clamps which Loewer and Blair employ. In thus adapting the machine to the work of cutting sole leathers to patterns there was no inventive achievement. It is

Digitized by Google

well settled that "a mere carrying forward, or new or more extended application of the original thought, a change only in form, proportions, or degree, the substitution of equivalents, doing substantially the same thing in the same way, by substantially the same means with better results," is not invention in a patentable sense. Smith v. Nichols, 21 Wall. 112, 119; Trimmer Co. v. Stevens, 137 U. S. 432, 11 Sup. Ct. 150; Ansonia Brass & Copper Co. v. Electrical Supply Co., supra.

From what has been said, it follows that the court below gave to the Loewer and Blair patent a broader construction than is allowable in view of the prior state of the art. That construction practically invests the complainant, as the owner of the patent, with the exclusive right to use a machine of the Blanchard type in the cutting or trimming of shoe soles. We think, however, that at the date of Loewer and Blair's improvement in sole-cutting machines, no patent could rightfully issue for the broad combination in such machine of a revolving cutter and its shaft on a fixed frame, with revolving clamps to hold the rough material mounted on a shaft on a movable carriage, and a revolving form operating to vary the relative positions of the cutter and sole clamps. If, then, there is patentable novelty in Loewer and Blair's machine, it is to be found in the peculiar features of organization specified by them, and the claims must be limited accordingly. The specification of the Loewer and Blair patent describes, and the drawings illustrate, a three-part shaft, the pattern and the clamped sole leathers being held between the sections of the shaft in the manner specified, and a simultaneous and positive rotary movement is imparted to the two end parts of this shaft by actuating mechanism effecting a double drive. In the first claim of the patent the term "supporting shafts" must, we think, be construed to mean the described three-part shaft, and the phrase, "revolving sole clamps, E, E', * * * substantially as described," must be taken as including the mechanism for producing the double drive. The double drive gear applied to the three-part shaft seems to us to be the novelty of this claim. This feature is not found in the machine of the appellant (the defendant below). His machine does not contain a three-part shaft nor the double-driving mechanism. The working organization of his machine conforms to that of the old King heel-trimming machine, and the hand of the operator turns the shaft to present the stock to the cutter. Upon our construction of this claim, the appellant's machine does not infringe the Loewer and Blair patent. The first is the broadest claim, and, as that claim is not infringed, there is no infringement of any of the other claims here in question.

These views require a reversal of the decree. Accordingly the decree of the circuit court is reversed, and the cause is remanded to that court, with directions to enter a decree dismissing the bill of complaint, with costs.

Digitized by Google

(79 Fed. 331.)

COWLES ELECTRIC SMELTING & ALUMINUM CO. et al. v. LOWREY.

(Circuit Court of Appeals, Sixth Circuit. February 15, 1897.)

1. CONSTRUCTION OF CONTRACTS—GRAMMATICAL RULES.
   A contract is to be construed in strict accordance with grammatical rules, unless there are circumstances requiring a departure therefrom. But the grammatical rule raises only a prima facie presumption, and does not preclude the settling of the meaning by detracting somewhat from the exactness of the language, to give effect to more cogent reasons of a different kind. Thus, plural language may be held to include the singular also.
2. PATENTS—CONSTRUCTION OF TERMS—"ELECTRIC SMELTING."
   The word "smelting," as used in the phrase "electric smelting," to designate a process of reducing ores by the use of electric current, is not necessarily confined to its more technical meaning of melting ores in the presence of some reagent, as carbon, which operates to separate the metallic element by combining with the nonmetallic element, but may include a reduction effected by the electric current in the absence of a reagent, the current effecting the same purpose as the reagent.
3. CONSTRUCTION OF CONTRACTS—UNDERSTANDING OF THE PARTIES.
   A party must be deemed to have assented to a contract in the sense which he knew the other party intended it to signify, if the language employed is capable of that meaning.
4. SAME—ASSIGNMENTS.
   Certain inventors who had pending certain applications, etc., for patents relating to "electric smelting processes and furnaces," procured from other alleged inventors of similar processes an assignment of all their discoveries and inventions, patents, pending applications, and caveats on file, "relating to electric smelting processes and furnaces, which do or may interfere with" any pending applications of the assignees. *Held*, that the word "interfere" was not used in the strict technical sense in which it is used in the patent office, and that the contract showed a purpose to remove all obstructions, so that the applications filed by the assignees might proceed without any contest by the assignors.
5. SAME.
   An assignment by two inventors of all their discoveries, applications, and patents relating to "electric smelting processes and furnaces," construed, and *held* to pass title to a pending individual application of one of the assignors for a process of reducing ores by "electrolysis," where the essential idea set forth in the applications of both assignor and assignees was the reduction of ores and metallic compounds by depositing the material to be treated between the electrodes of a dynamo-electrical machine, and passing therethrough the electric current, electrolysis being merely an incident of that operation. 68 Fed. 354, reversed.
6. CONSTRUCTION OF CONTRACTS—SUBSEQUENT CONDUCT OF PARTIES.
   The subsequent conduct of the parties may sometimes be resorted to, to aid in the construction of their contract, but can only be considered when the contract, read in the light of surrounding facts, leaves its meaning in doubt; and, if the subsequent action of the parties gives nearly equal ground for opposite conclusions, no aid is to be derived therefrom.

Appeal from the Circuit Court of the United States for the Eastern Division of the Northern District of Ohio.

The bill in this case was filed in the court below by Grosvenor P. Lowrey, of the city of New York, against the Cowles Electric Smelting & Aluminum Company, an Ohio corporation doing business at Cleveland, and Alanson T. Osborn, the treasurer of the company, for the purpose of removing a cloud upon the title of the complainant in two patents assigned to him by one Charles S. Bradley, the patentee therein, and to quiet the title of the complainant in said patents. The bill, after setting up the obtaining of the patents by Bradley and the transfer thereof to the complainant, alleged that the defendant, the Cowles

Digitized by Google

Electric Smelting & Aluminum Company, had set up and asserted title to the same patents, under a certain contract made on the 18th day of May, 1885, between the said Cowles Electric Smelting & Aluminum Company of the one part and the said Charles S. Bradley and one Francis B. Crocker of the other part, whereby, as the defendants claimed, all the right, title, and interest of the said Bradley in the invention covered by the patents so assigned to the complainant had been assigned by the said Bradley to the said company; and that the company had executed an instrument of assignment of the said patents to Alanson T. Osborn, its treasurer, and caused the same to be placed upon the record of assignments in the patent office. It is claimed in the bill that this instrument of assignment to Osborn was false and fraudulent, and had no foundation in the contract upon which the company claimed title, and that putting the same on record and the assertion of claim to the Bradley patents, under a claim founded upon the contract above mentioned, operated to create a cloud upon the complainant's title. The contract made specific mention of an application of Bradley and Crocker, No. 158,805, then on file in the patent office. The bill sets out this contract in an exhibit, which will be presently copied, and alleges: "That while the language in said agreement between Crocker and Bradley and said Cowles Electric Smelting & Aluminum Company is broad enough in its general terms to cover other inventions of said Crocker and Bradley than that embraced in said application No. 158,805, it was not intended to and did not in fact embrace any other inventions;" and that the application of Bradley, upon which the patents were issued to him as above mentioned, "was not by any act, understanding, or contract of the parties included in said agreement of May 18, 1885." The defendants appeared and pleaded to the bill, the substance of the plea being a statement of the facts and circumstances under which the contract of May 18, 1885, was executed, and a claim of title to the Bradley invention; and an answer, setting up substantially the same facts, was filed in support of the bill. The case having been brought on for hearing upon the defendants' plea, the same was overruled by the court, and the defendants, under leave of the court, then filed a further answer to the bill, and they also filed a cross bill, praying that the assignment to the said Grosvenor P. Lowrey might be decreed to be null and void, and that he might be perpetually enjoined from claiming any right, title, or interest in the said Bradley patents or either of them. Thereupon, a replication to the answer having been filed, and the pleadings upon the cross bill having been perfected, proofs were taken, and the cause again came on for final hearing. The case having been heard and considered, the court below decreed in favor of the complainant, holding, in its opinion, that Bradley's invention did not pass to the Cowles Electric Smelting & Aluminum Company by the contract of May 18, 1885. The opinion of the court upon the overruling of the plea is found in 56 Fed. 488, and the opinion on the final hearing in 68 Fed. 354. On the 8th of April, 1885, one Colgate Hoyt, acting in behalf of the Cowles Electric Smelting & Aluminum Company, procured from C. S. Bradley, who resided at Yonkers, N. Y., an option for the purchase of an interest in Bradley's inventions in the art, and took from him a writing witnessing it, as follows:

"New York, April 8, 1885.

"By and between Charles S. Bradley and Colgate Hoyt, both of Yonkers, in the state of New York, it is agreed as follows: Said Bradley shall, upon demand of said Hoyt, made at any time within ninety days from the date hereof, assign to said Hoyt, or his order, for the consideration of ten thousand dollars cash, an undivided one-quarter interest in all inventions which he has hitherto made in electric furnaces, and in the reduction of ores by electricity, and of all patents to be granted therefor, whether applications for such patents have already been filed or shall hereafter be filed, in the patent office of the United States; and, in consideration of the option being granted, said Hoyt, or the party to whom he may have assigned the same, shall pay to said Bradley, at the date hereof, the sum of five hundred dollars.

"Charles S. Bradley."

"New York, April 8, 1885.

"Received of Colgate Hoyt five hundred dollars.

"Charles S. Bradley."

Digitized by Google

This appears to have been in duplicate, for upon the making of the contract next to be mentioned such a writing was delivered up by each of the parties to the other.

Not long thereafter a correspondence was opened by the company with Bradley and Crocker for the purpose of purchasing their inventions, the immediately moving causes of which were an interference which had been declared in the patent office between one of the Cowles applications and that of Bradley and Crocker, and an interference of a caveat of Bradley and Crocker with another of the Cowles applications. The result of this correspondence was that Bradley and Crocker came to Cleveland a day or two before the 18th of May, and, after further negotiations, reached an agreement. The contract upon which the controversy turns was made on the day of its date, and is here set forth, as follows:

"This agreement, entered into this 18th day of May, 1885, between F. B. Crocker, of New York City, N. Y., and C. S. Bradley, of Yonkers, N. Y., constituting the first party, and the Cowles Electric Smelting and Aluminum Company, of Cleveland, Ohio, a corporation organized under the laws of the state of Ohio, constituting the second party, witnesseth that whereas, the first party have made certain discoveries and inventions relating to electric smelting processes and furnaces, and have made some applications for patents therefor, in the United States patent office; and whereas, the said second party is desirous of becoming the owner of such discoveries and inventions.—it is therefore agreed between the parties as follows: (1) For the consideration hereinafter mentioned, the receipt of which to our full satisfaction is hereby acknowledged, the said first party does hereby sell, assign, and set over to the said second party all their interest in any and all discoveries and inventions relating to electric smelting processes and furnaces, and all patents they have obtained therefor, and all applications now pending and caveats on file in the United States patent office relating to electric smelting processes and furnaces, which do or may interfere with any application for patents made by Eugene H. Cowles and Alfred H. Cowles, of Cleveland, Ohio, now pending in the United States patent office. It is understood and agreed between the parties that this clause also includes the application of said first party now pending in the United States patent office and designated 'Serial Number 158,805,' and filed March 14, 1885. (2) Said first party also sells, assigns, and sets over to said second party their entire interest in all inventions, patents, and applications for patents in all foreign countries for the discoveries and inventions mentioned in the preceding clause of this agreement. (3) Said first party hereby authorizes and requests the commissioner of patents to issue to said second party patents for said discoveries and inventions mentioned in the first clause of this agreement. (4) Said first party for said consideration further agrees to sign and execute all papers necessary to perfecting applications for said inventions and obtaining patents therefor. (5) In consideration of the preceding, said second party hereby pays in hand to said first party the sum of five thousand dollars. In testimony whereof said parties have hereunto set their hands the day and year first above written.

Francis B. Crocker.
"Charles S. Bradley."

The material facts and circumstances which are referred to by the respective parties for the purpose of construing this contract, and ascertaining the intent and purposes of the parties therein, were these: The Cowles Electric Smelting & Aluminum Company, having just been organized at Cleveland, was about to engage in business, principally that of the manufacture of aluminum. In aid of this purpose it had become the owner of several inventions made by Eugene H. and Alfred H. Cowles, relating to the reduction of metallic ores and compounds, and especially to the production of aluminum from its ores and compounds by smelting them by means of the electric current. The first of these applications was one filed December 24, 1884, by E. H. & A. H. Cowles, and it was stated therein that their invention related to improvements in electrical furnaces and the method of operating the same; and it was further stated that the invention related to that class of electric furnaces in which heat was generated by means of the incandescence of a resistance body. The apparatus contemplated consisted of the electrodes of a dynamo-electrical ma-

Digitized by Google

chine placed within and on the opposite sides of the chamber or containing vessel and of the material deposited therein, and the process consisted of placing between the electrodes a mass of ore or other material to be operated upon, intermixed with carbon, both in a granulated or pulverized condition, and then passing through the material the electric current. In this mixture the carbon was intended to serve the purpose of a resistance medium in which a high degree of heat would be produced by compelling the current through it. Thereby the commingled ore in contact with it would be fused and separated from its chemical compounds. In reference to the material to be treated, it was said that it might be "mixed with the granular resistance medium, or imbedded in it, or otherwise brought in close contact therewith; or it may constitute, in itself, the resistance medium, according to the character of the material and the object sought to be accomplished." And in a subsequent part of the specifications this was further explained by saying: "Some ores or chemical mixtures may be of such a character, as to conductivity or resistance, as to become incandescent when treated in the above-described manner, in which case the addition of carbon is not necessary. The current of electricity passing through the mass of broken or pulverized ore, or mixture, will, in that case, generate the heat necessary to smelt or reduce it." The specifications give the construction of the apparatus and the mode of combination in detail. It is only necessary here to state them generally, as above. The claims appended thereto were 10 in number; some of them were for the apparatus and others for the process, of which may be especially noted claim 6, which was as follows: "(6) The method of smelting ore herein described, which consists in pulverizing the ore and introducing the pulverized ore in a dry state within the circuit of an electric current by means of which the ore is reduced, substantially as and for the purpose set forth." This claim 6 was subsequently amended by inserting after the word "current," in the third line: "The said circuit being established through the body of dry pulverized ore of which it forms a part and." A further explanation was made of the process by an amendment as follows: "The heat is generated solely by the electric resistance of the particles of the granular body, exactly as in the case of an incandescent lamp by the resistance of the carbon filament to the passage of the current, and no other heat is employed at any stage of the work." Subsequently, by an amendment filed December 24, 1884, the specifications were changed, and in the matter of the specifications after such change occurred this passage: "To this end the invention consists essentially in the use, for metallurgical purposes, of a body of granular material of high resistance or low conductivity interposed within the circuit in such a manner as to form a continuous and unbroken part of the same, which granular body, by reason of its resistance, is made incandescent and generates all the heat required. The ore or other material to be reduced is usually mixed with the body of granular resistance material." In another part of the specifications it was stated that the degree of granulation might vary with the conditions of the case; and it was stated that the scope of the invention was not limited by the degree of granulation. And it was elsewhere stated that the proportions of ore and carbon would depend upon the character of the ore and the degree of heat required to reduce it, and that the degree of heat evolved would be determined by the resistance or conductivity of the mass and the strength of the current employed.

After stating that the matter of the apparatus was reserved for a separate application, entirely new claims were substituted for the original claims, three in number, of which the following is claim 1: "(1) The method of generating heat for metallurgical operations herein described, which consists in passing an electric current through a body of broken or pulverized resistance material that forms a continuous part of the electric circuit, the material to be treated by the metallurgical process being brought in contact with or close proximity to the broken or pulverized resistance material, whereby the heat is generated by the resistance of the broken or pulverized body throughout its mass, and the operation can be performed solely by means of electrical energy." On February 14, 1885, the application was allowed; but, on the 20th day of March following, the case was withdrawn from issue in view of the prospective interference with another pending application, which turned out to be that of Bradley and Crocker, No. 158,805, specifically mentioned in the contract of May 18,

Digitized by Google

1885, and on April 10, 1885, such interference was declared. This was the state of the proceedings upon the application, at the date of the contract.

Another application by E. H. & A. H. Cowles was one filed February 24, 1885, being a divisional application founded upon that of December 24, 1884, just mentioned. It was for improvements in electric smelting furnaces. The details of construction suggested as embodying this invention were those enumerated in the main application, and the claims made thereon were for combinations of such apparatus. After some changes in the specifications and claims, it was announced at the patent office that the application was ready for allowance; but on May 1st it was declared that the case must be withheld from issue because of the fact that the main case was in interference with the Bradley and Crocker application, and on May 6, 1885, it was declared suspended to await the filing of an application by Bradley and Crocker upon their caveat which was found in the office. Notice of this suspension and the reason therefor was mailed to E. H. & A. H. Cowles, May 7, 1885, and this application of Cowles and Cowles stood in this plight on the 18th of May, 1885. Still another application was that of A. H. Cowles, filed May 15, 1885. It related to improvements in electric furnaces and methods of operating the same. The specifications delineated not only the apparatus, but also the method of operation. The apparatus consisted, substantially, of a containing chamber through the opposite sides of which the electrodes of a dynamo-electrical machine were inserted extending into the chamber towards each other so as to be in contact with the material to be reduced, and provided with mechanism whereby the electrodes could be pushed in so that the ends would be near each other or withdrawn to the wall of the chamber, as the requirements of the work to be performed should indicate. The chamber also contained a lining of some substance which was a nonconductor of heat or electricity, a lining not made integral with the walls of the chamber, but packed in at the time of putting in the charge of material, or perhaps continued for successive operations. The process was one plainly indicated by the apparatus. The material which was to be subjected to the operation was stated to consist generally of intermingled ore, or metallic compounds, and carbon. Although it was stated in the specifications that the mingling of the carbon or other resistance material was generally done, it was also said: "But in some cases pulverized ore alone is used when it is a sufficient conductor of electricity." The claims also negative the necessity for the intermingling of the carbon or other resistance material. The material was filled into the chamber and covered with the lining material, provision made for the escape of gases, and the operation commenced by moving the points of the electrodes through the mass until they came sufficiently near each other so that the passage of the current would fuse the intervening or adjacent material. As soon as the fusion was started the electrodes were moved apart, gradually receding as the fusion progressed, whereby the mass of material between the electrodes acquired increased conductivity, until eventually the whole mass of material was brought within the influence of the current and melted down. The original claims as they stood at the date of the contract were for combinations of the apparatus only; but it should be noted in this connection that the specifications contained also the basis for a patent upon the process, and that eventually the patent did, in fact, issue for both, the first claim in which was as follows: "(1) The method of smelting ores and other substances by the incandescence of an electric material contained in said substances or mixed therewith, which consists in first bringing a limited quantity of the material to be treated between a pair of electrodes, and then gradually increasing the quantity of such material by causing the electrodes to recede from each other, substantially as herein set forth."

No proceedings in the patent office subsequent to the filing had taken place upon this application until after the 18th of May, 1885. On the other hand, there was at that time pending in the office the application of Bradley and Crocker, which claimed the invention by them of heating and reducing ores by electricity. That process was similar to that specified in the Cowles application of December 24, 1884, and is the one which was put into interference with that. It is not necessary to go into the details of that application, as there is no question material to the controversy relating to it. There was also then in the archives of the office a caveat deposited by Bradley and Crocker,

Digitized by Google

February 26, 1884, which described the invention by them of an electrochemical or metallurgical process, in which the necessary "heat is produced and maintained by passing a powerful electric current either through the materials themselves which are undergoing treatment when these materials are conductors of electricity, or through separate conductors placed in the furnace, the energy of the electrical current being converted into heat by the electrical resistance of the materials or of the conductors through which it passes." The details stated in this caveat are of the apparatus employed and also of the mode of operation. In general, the apparatus consisted of carbon plates set in brick work and constituting the two electrodes. These electrodes were placed on opposite sides of the space containing the material, and there was a lining of the furnace consisting of nonconducting material. The mode of using the apparatus was by filling in the intervening space between the electrodes, and passing through it an electrical current in a way substantially like that already stated in the applications above described. In this caveat there was this passage: "We are about to make application for a patent for an invention resembling to a certain extent the one herein described, but in which the electric current we employ to produce the necessary heat in the furnace is also made to perform the function of electrolyzing a fused compound; that is, reducing a metal by the electrolytic action of the current that we employ to keep the bath in a state of fusion. But it is to be observed that in the invention described in this caveat the electric current by which we produce the required heat performs no electrolytic action upon the materials undergoing treatment, the reaction being purely chemical, and the function of the current being solely to develop the heat which is a necessary condition of the reaction." This caveat is the one above mentioned, on account of which the application of Cowles and Cowles of February 24, 1885, was suspended on May 6, 1885. There was also pending in the office when the contract in question was made the Bradley application, upon which and its outgrowths the present controversy has arisen; and a somewhat particular statement of its nature, history, and then existing status seems necessary for the purpose of explaining the grounds upon which the conclusion here reached is founded. The application was filed by Charles S. Bradley, February 23, 1883. In it he stated that his invention was: "A new and useful improvement in the electrometallurgical process," and it was said to relate "to the process of effecting the reduction of minerals or other compound chemical substances, while in a state of fusion, by the electrolytic action of an electric current; and it is especially designed for the extraction of metals from their ores or compounds, and their reduction to the metallic state." His method consisted of an operation therein described as follows: "Upon a hearth of brick or other suitable material is piled a heap or body of the ore, more or less pulverized, in the shape of a truncated cone, and a cavity or basin is excavated in the top of the heap to contain the fused portion of the ore which is to be treated electrolytically. In order to fuse the ore at the start, I bring the two electrodes into contact, separate them sufficiently to produce an electric arc, and then thrust them down into the ore lying at the bottom of the cavity or basin, where the ore soon fuses by the heat of the arc, and becomes a conducting medium or electrolyte through which the current from the electrodes continues to flow. The decomposition of the ore thereupon commences, the metallic aluminum being gradually deposited at the negative electrode, and the fluorine gas being set free at the positive electrode so long as the ore is maintained in a state of fusion; and I secure this result in my process by employing a current sufficiently powerful to develop the required heat in overcoming the resistance offered to its passage by the fused mass of ore, and, further, in having my electric generator or source of current so arranged that the strength of the electrolytic current may be properly regulated, and the mass of ore thereby kept at the proper temperature to obtain the most efficient electrolytic effect; or, in other words, to produce the largest yield of metal with the greatest economy in the electric current consumed." The claims were five in number, and were substantially as stated in claim No. 1: "The process of obtaining metals from their ores or compounds which consists in treating electrolytically a fused mass of ore contained in a basin or receptacle formed of the ore itself." On objection being made to these claims, Bradley, on April 8, 1885, amended his specifications, and substituted new claims. In his amendments, among

Digitized by Google

other things, he inserted the words "or electro-chemical" after the word "electro-metallurgical" in the statement of the field of his invention, and placed, at the head of his communication to the office embodying his amendments, the title, "Improvement in Electro-Metallurgical or Electro-Chemical Process." And in respect to the incidents of his process he inserted the following statement:

"The arc, of course, ceases to exist as soon as there is a conducting liquid—the fused ore—between the electrodes, and the passage of the current then takes place through the fused ore by conduction, and the heat is produced as it is in an incandescent lamp. The arc is merely used to melt the ore in the beginning, and the ore is kept melted by incandescence, so to speak." Also the following: "It is obvious that other chemical and metallurgical processes may be carried on according to my invention in substantially the same manner as that I have described. It is also evident that various forms of furnace and built of various materials may be employed without departing from my invention." The substituted claims were for the process only, eight in number, the third of which is here stated: "(3) The herein described electro-metallurgical or electro-chemical process which consists in employing an electric current sufficiently powerful, not only to effect the electrolytic decomposition of the ore or compound treated, but also to develop by its passage the heat required to fuse said ore or compound or maintain it in a state of fusion." In no one of these claims was the initial fusion made an element or step in the process. The claims took up the process with the initial fusing already accomplished, adopting it as the datum from which the process described advanced.

On April 16, 1885, the claims were rejected upon references, especially to the detail of experiments of Sir Humphrey Davy in the Philosophical Transactions of the Royal Society. There were no other applications or caveats of Bradley and Crocker, or either of them, then on file. It is not deemed necessary to state the subsequent proceedings upon these several applications in minute detail; some of them are referred to in the opinion. It suffices here to state that the several Cowles applications were carried through to patents,—some of them after changes in the specifications and claims; and one of them in particular, that of A. H. Cowles, resulted in a patent for not only the process, but also the apparatus in which it was conducted. Nothing was done after the contract was made by the Cowles Bros. in respect to the Bradley application, nor for the purpose of securing any rights in the invention stated in the Bradley and Crocker caveat; and Bradley himself did nothing further with his application for nearly two years thereafter, when, on April 13, 1887, he took up the proceedings again, and, after a protracted struggle—in which there were repeated rejections and amendments of the specifications and claims—in the patent office, finally obtained three patents. One of these, that upon his original application, was numbered 468,148, was issued February 2, 1892, and was for the process stated therein. It was said in the specifications, which had been amended in this respect during the progress of the proceedings, that "the body of unfused ore may either be formed into an unconfined pile, as in Fig. 1, or it may be contained in a receptacle or box, 6, of any desired shape, so as practically to form a tank or holder lined of the ore itself, as in Fig. 2. Such a lining will prevent the destruction of the holder, and the process may go on indefinitely without interruption." After describing his invention, he said: "I have described my process as preferably carried on by employing a body of the ore itself to form the basin or receptacle in which the electrodes are situated, between which the current flows through the ore for heating and electrolyzing the same. That specific invention, however, is not claimed herein, since it forms the subject-matter of patent No. 464,933, dated December 8, 1891. My present invention is not limited to the specific character of the receptacle nor the specific arrangements of the electrodes." Then follow the claims, of which the first was this: "(1) The process of separating or disassociating metals from their highly refractory ores or compounds, nonconductors in an unfused state, of which the ores and compounds of aluminum are a type, which consists in fusing the refractory ore or compound progressively by a source of heat concentrated directly upon it, rather than by an external furnace, and as it becomes fused effecting electrolysis by passing an electric current therethrough between terminals which are maintained in circuit with the fused bath,

Digitized by Google

whereby the process is rendered continuous, substantially as set forth." Another of the patents obtained by Bradley was No. 464,933, issued December 8, 1891. It was entitled, "Process of Obtaining Metals from Their Ores or Compounds by Electrolysis," and was based upon a divisional application of his original application, the general description of the process being that contained in the original application, with modifications made during its pendency. One of the amendments in the specifications was this: "The body of unfused ore may either be formed into an unconfined pile, as in Fig. 1, or it may be contained in a receptacle or box, 6, of any desired shape, so as practically to form a tank or holder lined of the ore itself, as in Fig. 2. Such a lining will prevent the destruction of the holder, and the process may go on indefinitely without interruption." And he further expressly disclaimed the initial fusing by an electric arc as a part of this invention, in the following terms: "I do not herein lay claim * * * to the process of obtaining metals from their ores or compounds * * * consisting in first fusing the ore or compound by the direct passage of an electric current therethrough, and then, while maintaining the fused condition by said current, also electrolytically decomposing the ore or compound." And he also distinguished this invention from the one specifically embodying his electrolytical process, by stating that he did not "herein lay claim, broadly, to the process of obtaining metals from their ores or compounds consisting in maintaining the ore or compound in a fused or molten condition by the passage of an electrical current therethrough, and electrolytically decomposing such ore or compound," since, as he says, he had made those the subjects of another application. Claims 1 and 2 of this patent were as follows: "(1) The process of obtaining metals from their ores or compounds, consisting in passing an electric current through a fused portion of the ore or compound contained in an unfused body or heap of said ore or compound. (2) The process of obtaining aluminum from its ores or compounds, consisting in passing an electric current through a fused portion of the aluminum ore or compound contained in an unfused body or heap of said ore or compound." Still another of the Bradley patents was No. 473,866, issued April 26, 1892, entitled, "Process of Obtaining Metals from Their Ores or Compounds," which states that it was "especially designed for the extraction of metals from aluminous and the like class of highly refractory ores or compounds, and their reduction to the metallic state,—for example, the extraction of aluminum from one of its ores, say cryolite." In his application, in addition to the apparatus provided in his original specifications, he states that he employs an auxiliary source of heat in the nature of blowpipe or similar flame projected upon the material in the vicinity of the electrodes, and keeping up the fusion in that way. The nature of this patent is disclosed substantially by the following, claim 1: "(1) The herein described process of obtaining metals from aluminous and the like class of highly refractory ores or compounds, which consists in fusing, and, when fused, establishing an electric current through a bath of the material to be treated, and by such current, together with a blowpipe flame or other auxiliary source of heat concentrated directly upon the material treated, rather than through the walls of a furnace or crucible, maintaining the fused bath of ore constant, and electrolyzing the same, as set forth." During the progress of the suit Grosvenor P. Lowrey died, and it was revived in the name of his executor, Francis P. Lowrey, who is the appellee in this court.

Loren Prentiss and E. N. Dickerson, for appellants.

Robert S. Taylor, for appellee.

Before LURTON, Circuit Judge, SEVERENS, District Judge, and HAMMOND, J.

SEVERENS, District Judge, having stated the case as above, delivered the opinion of the court.

The first of the questions presented by this record relates to the application of the rules of evidence in respect to the competency of proof of the prior and contemporaneous parol negotiations of the parties, for the purpose of affecting the construction of the con-

Digitized by Google

tract. The competency of such evidence depends upon the nature of the proceeding and the purpose for which it is offered. If the proceeding is for the purpose of reforming the writing so that it shall truly express the intentions and purposes of the parties, such evidence is no doubt admissible, for in such a case the primary object is not to construe the contract, but to ascertain what the real contract was, to the end that, if the writing fails to express it, it may be reconstructed so that it shall do so. On the other hand, if the purpose of the suit is to enforce a written contract, whereby the writing is accepted as it stands and admittedly expresses the intentions of the parties, the general and familiar rule applies that such prior and contemporaneous negotiations are not admissible to affect the construction of the writing. This rule is founded upon the presumption that the parties have gathered in and finally put in form the result of the negotiations, the obvious purpose of the writing being to express in a definite and authentic form their final conclusions. The general rule just stated does not, however, exclude proof of the facts and circumstances showing the situation of the subject-matter, and the relations of the parties thereto, or other facts and circumstances tending to throw light upon those subjects. Such matters stand upon a different ground from the mere negotiations of the parties relating to the terms of the contract. In the present case the suit was not brought for the purpose of reforming the contract, and no question is made but that it is in the form and language in which the parties intended it. Both parties stand upon it as written, the controversy being only as to what the writing means upon the proper interpretation of its language. There is considerable evidence in the record to which the court can therefore give no weight, which relates to their negotiations before and at the time of the signing and delivery of the written contract. But we may regard such evidence as shows to us the situation of the matters contracted about, and how the parties stood in relation to them. The most material facts thus shown in the present case are embodied in the preceding statement.

Coming, now, to the interpretation of the contract, it is contended on the part of the appellee that Bradley and Crocker, the parties of the first part in the contract, agreed to sell only such of their joint property as fell within the description of the subject of their grant, that no express mention was made therein of any individual property of either of them, and therefore that Bradley's individual application did not pass. On the other hand, the appellants insist that the general language employed, when considered in the light of the evident purpose and the reasons of the parties actuating them, includes, not only the joint property of Bradley and Crocker of the kind described, but also the individual property of each of them of the same kind, by plain intendment. The court below held that the latter was the proper view to be taken of the question, and in that we concur. Undoubtedly, if there are in any such case no circumstances which would change the primary grammatical construction, the terms employed would support the appellee's contention; but the grammatical rule raises only a prima

Digitized by Google

facie presumption, and does not preclude the settling of the meaning by detracting somewhat from the exactness of the language in order to give effect to more cogent reasons of another sort. And the cases are very numerous in which this principle has been applied, and the plural language of the agreement has been held to cover and include the singular also. "If two persons have goods in jointure, and give all their goods, not only those they have in jointure, but their several goods also, pass." The substance of the rule is stated in Co. Litt. 197a, and several cases are cited in the opinion of the court below in illustration and support of it. Justice Windham's Case, 5 Coke, 7b; Wharton v. Fisher, 2 Serg. & R. 182; Williams v. Hadley, 21 Kan. 350; Judd v. Gibbs, 3 Gray, 539; Von Wettberg v. Carson, 44 Conn. 289; Coffin v. Douglass, 61 Tex. 406; Shoe Co. v. Ferrell, 68 Tex. 638, 5 S. W. 490; Bank v. Beede, 37 Minn. 527, 35 N. W. 435. The general rule above invoked is one which is applied also in the construction of statutes. Black, Interp. Laws, 154, and the instances there given.

It is conceded by counsel for the appellee that the reference in another place in this contract to "applications for patents made by E. H. & A. H. Cowles" would include the application which was made by A. H. Cowles alone, although he says that if he were disposed to stand upon a small point of verbal criticism he could say that the latter application was not within the terms of the agreement in controversy. We think that is a just as well as frank concession, and that the reason for it is equally applicable to the construction of the language we are now considering.

Much stress is laid by the appellee upon the fact that the contract of May 18, 1885, did not in terms enumerate as coming within the grant the Bradley application, notwithstanding that it had been brought to the notice of the Cowles Company by the reference thereto in the Bradley and Crocker application, which was present at the time when the contract was made. This reference to the Bradley application was made for the purpose of stating the difference between that and the Bradley and Crocker application. In the reference, the general characteristic of the Bradley invention was stated, but not the details; and it is now strenuously insisted that the omission of any special mention in the contract of the Bradley application, whose existence was known, in connection with the fact that the Bradley and Crocker application is specifically mentioned, furnishes strong evidence that it was not intended by the parties that the Bradley invention should pass; and this consideration appears to have had great weight with the court below in determining the construction which ought to be put upon the contract.

Now, one of the applications of Cowles and Cowles, for a patent for improvement in electric smelting furnaces, which had been filed on February 24, 1885, was pending at the time of this contract. The details of the apparatus proposed by it were those suggested by their previous application, filed December 24, 1884, of which the one now mentioned was a divisional application. The claims were for combinations of such apparatus. After some changes in the

Digitized by Google

specifications and claims, it was declared at the patent office to be ready for allowance on May 1, 1885, but it was at the same time declared that the case must be withheld from issue, because of the fact that the main case was in interference with the Bradley and Crocker application. And a little later, on May 6th, this Cowles application was declared suspended, because of the following facts stated in a notice directed to Cowles and Cowles, which stated that "the caveat of C. S. Bradley and B. F. Crocker, pending at the date of the filing of this application, is found to cover substantially the apparatus herein claimed; and, as provided by rule 196 the caveators have been notified to file a complete application. This application must be suspended in view of the above action." This notification was mailed to Cowles and Cowles on May 7, 1885, and, by due course of mail, must have reached them a week or more previous to the date when the parties met and concluded the agreement of May 18th. And its previous reception was probably the reason for the mention of caveats as one of the class of things desired by the Cowles in a letter written to Bradley and Crocker, May 11, 1885. The Cowles brothers must, therefore, have had quite as ample notice, not only of the existence of the caveat, but of its substantial nature, as they had of the Bradley application and its contents. The Bradley and Crocker caveat, therefore, stood directly across the path of one of the Cowles applications, and was obstructing the path of the applicants in the same way that the Bradley and Crocker application was obstructing that of another one. Yet the caveat was not distinctly mentioned in the contract, and is not included, unless it is included in the general terms. No one can doubt that the caveat must be regarded as within the scope of the contract. It is obvious, therefore, that the parties cannot be deemed to have excluded inventions and claims simply because they knew of their existence and did not include them in terms.

The above-mentioned argument of the appellee appears to have had much weight with the court below in determining the proper construction to be put upon the contract; for, as we gather from the opinion there given, it was the main consideration upon which the court held that the parties did not actually suppose that Bradley's invention was included. 68 Fed. 368. It is probable that the condition of the case on the application of Cowles and Cowles of February 24, 1885, at the date of the contract, was not brought to the attention of the court, as no reference was made thereto in its opinion. The manner in which this caveat was dealt with in the contract confirms the impression which is strongly induced by the general and sweeping terms of the contract as a whole when construed in the light of existing facts, that impression being that it was the purpose of the parties to bring under the operation of the contract every existing thing in the nature of inventions and applications which might tend to defeat any of the Cowles inventions and applications. Again, it is urged that the reference to the Bradley application in that of Bradley and Crocker indicated to the Cowles brothers that the Bradley invention was so far off from their own that it was of no importance for them to acquire it, but we do

Digitized by Google

not think that such was the probability. On the contrary, we think that that reference bore on its face the signal of danger. It is stated that in that application Bradley had described "an electro-metallurgical process in which an electric current is employed to perform two functions: First, to effect an electrolytic disruption of the materials treated; and, second, to supply the heat necessary to maintain said materials in a fused state while they are being electrolyzed." Now, to a man having the familiarity with the subject which the Cowles brothers possessed, it was apparent that this process contemplated an operation which in its nature essentially consisted of a transposition of the two operations mentioned in this reference; for the material must first be fused before the electrolytic disruption could occur, that being necessarily a secondary effect. They knew that in their own applications for a similar process it had been stated that in some circumstances, depending upon the conductivity of the materials treated, no carbon or other independent material was employed as an agent in the operation, but the process was performed by the direct application of the current to the subject-matter to be reduced. It seems to us, therefore, that, if there is any inference to be derived from the probabilities of the case upon this aspect, it is clearly against the party who now seeks to make use of it. The result is that it must be held that the individual application of Bradley then pending in the patent office was included in the grant, if it is, in other respects than with regard to its ownership, within the description of the things intended to be conveyed.

A point is made upon the descriptive words of the grant, "discoveries and inventions relating to electric smelting processes," and the endeavor is to establish that Bradley's process is not correctly described if we designate it as "electric smelting," and therefore was not included. But we think it was an apt and proper description of it. It was performed by electricity, and that was the feature of it which distinguished it from the old methods of reducing ores. By using the current the ore was "smelted." By the definitions of the dictionaries the word "smelting" is shown to be sometimes employed to signify simply "melting," "fusing," and sometimes, and more commonly in its practical sense, to mean the reduction of ores by melting them in the presence of some agent which would react upon the compounds of the ore when fused, and thereby separate them. Such a reagent is carbon. But if in Bradley's process the one agent performed both functions by melting and decomposing the ore, we can see no reason whatever for giving it a name which should also indicate the secondary effect in the process any more than it was necessary in the old art to include it in the designation. The term "electric" sufficiently distinguished it from the older method, for in itself it carried the idea of fusing and electrolyzing, both being its well-known functions. Because a different agency was employed to effect one of the things done in the operation would not alter the general character of the whole process, to which the comprehensive characterizing of "smelting" in the sense of "reduction" would fitly be applied.

Digitized by Google

The Bradley process was not less appropriately described as an electric smelting process than that of Siemens by the electric arc. At the hearing there was exhibited to us the work of Dr. Urbanitzky, originally in German, entitled "Electricity in the Service of Man." This was subsequently edited by Dr. Wormell, and was republished in English with an introduction by Perry, in 1886, at London and New York. In this work Siemens' process is described as "electro-smelting." The indications are quite strong that the court below was in error in supposing that even as early as 1885 the process of reducing metals by electricity was not denominated "electro-smelting."

This brings us to the question of the interpretation of the following language in the contract:

"And all applications now pending and caveats on file in the United States patent office relating to electric smelting processes and furnaces which do or may interfere with any application for patents made by Eugene H. Cowles and Alfred H. Cowles, of Cleveland, Ohio, now pending in the United States patent office."

It is urged upon us that we should accept as a test in the construction of this language that the parties intended it to be employed in a sense restricted to its technical signification,—such a signification as would be given to the same expressions in the patent office. This is based upon the suggestion that they were scientific men dealing with a scientific subject in the crisis of an interference. But, when we attend to all the circumstances, we doubt whether such a mode of dealing with the construction of the contract would be just, although in the end it does make a vital difference whether we adopt the test suggested or not. It is to be observed that one of these parties was a corporation which was just being launched upon a manufacturing business. The patents which it was expected would be obtained upon the inventions which it had secured were an adjunct necessary to their business operations. The company was buying its peace, and endeavoring to obtain and secure an indubitable title to the inventions which they intended to employ. They were not engaged in a hand to hand contest in the patent office or in the courts. They were endeavoring to so shape their affairs as to relieve themselves from the necessity of making such contests. They stood outside of any such place of controversy, and were dealing with the subject-matter on business principles. For these reasons we think there is much reason for believing that when they employed the general language, all inventions and discoveries, patents, applications, and caveats, which did or might interfere with their own applications for patents, they intended to gather in all which the other party had which would furnish any reasonable ground for claiming that they infringed. These facts and reasons are equally well calculated to show that the other party had an equivalent intention in making the grant; or, at all events, that they must have known that that was the understanding of the grantee when they closed the contract, and this would bind them to the agreement having that interpretation. It is a well-established doctrine that a party must be deemed to have as-

Digitized by Google

sented to the contract in such a sense as he knew the other party intended it to signify, provided the language employed is capable of such a meaning. And we have no doubt that for the purpose of construing this contract we must suppose that the parties intended to deal with existing things, and in the form and character in which they existed. The leading purpose was to clear the way of all obstructions, so that the Cowles applications might proceed without any contest on the part of the other parties, with whom they were making the contract. It is difficult to suppose that these purchasers were intending to secure what might ultimately be determined to interfere with or defeat their claims, either upon a contest in the patent office or by judicial decree, as the result of litigation. It would rather seem that the proper test to be applied in the solution of the question, whether any invention or any application is to be included within the terms of the grant, is this: whether the invention or application was of such a character that it might interfere with the prosecution of their own applications; and by that we mean, of course, not an obstacle which had no substance or foundation on which a contestation could reasonably be based, but such as would furnish a reasonable ground for raising a controversy. We do not find it necessary, however, to give the contract so broad a scope. In our opinion it did, without doubt, include all inventions and applications of Bradley and Crocker which would in fact afford sufficient ground for declaring an interference or would tend to defeat a patent on any of the Cowles applications if such a patent should, without any declared interference, be issued. Any other construction more favorable to the appellee would tend to defeat the leading and manifest purpose of the whole transaction.

The appellee contends that the words "which do or may interfere" have relation back to all of the preceding subjects of the grant, and include the words "discoveries and inventions." On the other hand, the appellants contend that they refer only to the words immediately preceding, "and all applications now pending and caveats on file in the United States patent office relating to electric smelting processes and furnaces." It must be confessed that the question is somewhat doubtful. In support of the appellants' contention that it relates only to the immediately antecedent words, it may be observed that it was known that there were applications and a caveat of the other party on file in the patent office relating to the subject. They also had in mind that the Cowles brothers had applications there. These properties were, therefore, of the same sort. And if we were to assume that the parties were dealing, as contended, "in the atmosphere of the patent office," the language employed would be apt and technical to describe the things "which do or may interfere"; whereas, using the language in the meaning which it has in the patent office, it would be a bungling and unusual expression to speak of "discoveries and inventions" as interfering. But as we are not disposed to interpret this contract strictly in the way in which such terms would be employed in the patent office, for reasons which are elsewhere explained, we are inclined to think,

Digitized by Google

upon consideration of the leading object which the parties had in view, which was to clear the way for their own inventions and applications, that the limiting words "which do or may interfere" were intended to apply to all of the things granted, which are mentioned in this paragraph, except perhaps the Bradley and Crocker application mentioned in the subsequent clause. For this reason it becomes necessary to determine whether the Bradley application was one which did or might interfere with any of the Cowles applications.

We are not required to pass upon the validity of the patents involved in this suit, or of any of them. There is no issue of that kind before us, and we shall go no nearer to such a decision than the determination of the issue here made requires. The comparison of one patent with another, for the purpose of determining their substantial identity, is essentially one of a comparison of claims, though the specifications may be referred to, within limited bounds, for the purpose of construing the claims themselves. As we think that the contract in question must be deemed to refer to things as they then existed, we think the comparison should be made of the specifications and claims made by the parties as they stood at that time, though we may refer to what has since been done upon the footing of those applications as illustrating their capacity. Considering that no patents had been issued, and the claims might be modified and put in any form which the specifications warranted, it is necessary to examine the specifications themselves for the purpose of showing what the real nature of the application was, and it is not of immediate consequence what the then pending claims were. Referring to the original application of E. H. and A. H. Cowles, filed December 24, 1884, it is seen that the invention related to improvements in electric furnaces and also the method of operating them. The general idea disclosed was that of the reduction of metallic ores and compounds by passing an electric current therethrough. In carrying out this general purpose it was stated that the material to be treated should be pulverized and mixed with pulverized carbon, but it was also stated in the specifications that the carbon need not be supplied where the ore or other material being treated had sufficient conductivity whereby to carry on the operation. Taking these two parts of the specifications together, it resulted in this: that the carbon would be used wherever it was found to be a necessary adjunct, and this would depend upon the particular ore or compound that was being reduced. The employment of the carbon was not, therefore, made an essential part of the process. And, further, by an amendment which had then been made, the proportion of carbon in any case had been made indeterminate. By another amendment the degree of pulverization was rendered immaterial.

In the claims as they originally stood, the third claimed simply "for a combination with the two electrodes placed at opposite sides of the furnace chamber of a mass of granular or pulverized material interposed between the same." The sixth was "for a process which consisted in pulverizing the ore and introducing the pulverized ore

Digitized by Google

in a dry state within the circuit of an electric current, by means of which the ore is reduced." These claims, however, were introduced before the amendments above referred to were made. Thus it will be seen that the specifications were of such a character as that it was competent, upon the basis of them, to claim the process of reducing metallic ores or compounds by bringing them between the electrodes of a dynamo-electrical machine, and passing through them the current, using carbon or not, as the character of the material made expedient. Whether such claims would be valid or not, it is not necessary here to inquire. Even before the making of the contract, such claims were in fact made in the applications; and there can be no question that the parties engaged in the purchase and sale of these inventions and applications, for the purpose of taking them out of the way, apprehended that such claims might properly be made and were tenable.

Referring, next, to the application of February 24, 1885, by the Cowles brothers, it is found to have been a divisional application, founded upon the one just considered. This was for so much of the invention stated in the original specifications as related to the apparatus. The matter of it is not very material to the present purpose, but it illustrates the flexibility of the proceedings in the patent office upon applications for patents therein pending, and it related to a class of inventions where the apparatus suggests the process. Another application was filed by A. H. Cowles, on May 15, 1885. It related to improvements in electric furnaces, and the method of operating the same, and the specifications showed both the apparatus and the method. Thus, although his claims were for combinations of the apparatus, the specifications also contained the grounds for a patent for a process; and, eventually, the patent issued upon this application actually covered both the apparatus and the process. Let us turn for a moment to these claims which were finally allowed and made the substance of his patent. It is material to observe in this connection that both in the specifications and claims of this patent the necessity for mixing carbon or any equivalent substance with the ore was expressly negatived; for he states in the specifications that "this [referring to the charge] consists ordinarily of electrical resistance material, such as electrolyte carbon, and the ore to be reduced, * * * but in some cases pulverized ore alone is used, when it is a sufficient conductor of electricity." And his first claim was "for the method of smelting ores and other substances by the incandescence of an electrical resistance material contained in said substances or mixed therewith, which consists in first bringing a limited quantity of the material to be treated between a pair of electrodes, and then gradually increasing the quantity of such material by causing the electrodes to recede," etc. The same observation may be made upon this as was made upon the application filed December 24, 1884, viz. that the employment of the carbon was not made essential to the process, but was left to the various requirements of the use, and the extent of its employment left to the judgment of the operator.

Considering next the Bradley application of April 23, 1883. It is seen to have been for an electro-metallurgical process. The first

Digitized by Google

step in the process which he described consisted in piling upon a hearth a heap of ore in the form of a truncated cone, making a basin in the top of the heap. He then took the two electrodes connected with the wires running from the dynamo-electric machine, and, bringing them near together, plunged then into the ore at the bottom of the basin, where, by reason of their proximity, an electric arc would be formed producing intense heat, and thereby melting the immediately adjacent material. As the ore melted, the electrodes were moved farther apart, whereupon the arc ceased, and the current, instead of passing between the lumps or granules of the material, passed through the mass which had become melted, whereby heat was generated serving to keep the mass molten; the result of which would be to melt down the other parts of the ore adjacent to that already melted, the electrolytic action of the current going on simultaneously after the initial fusion by the arc had been accomplished. According to the idea of the inventor, the concurrent fusing of the mass and the electrolyzing of the same would be continued until the operation ceased. It was also suggested that the operation might be continuous, and only needed the addition of fresh ore. He also indicated in his specifications an advantage in thus fusing the ore within a body of ore which remained unfused, in that it saved the walls of the crucible or other containing vessel in which such operations had generally been performed from the very serious corrosion, cracking, and crumbling resulting from the action of liberated gases and the intense heat. Taking this process all in all, it would seem, at least to one not thoroughly acquainted with what had already been accomplished in the reduction of ores and metallic compounds by electricity, to have been one of great merit. But the researches of Sir Humphrey Davy, Siemens, and other scientific men had already made a considerable advance in developing this new art. This application of Bradley's contained matter upon which were founded claims of many sorts, and was divided into three distinct lines; but up to May 18, 1885, it continued a single application. The claims appended originally to this application made no mention of any method of initially fusing the ore, but started the process upon which his claims were founded by treating the mass of ore as already fused, as is shown by his claim 1, which in this respect is a sample of all: "(1) The process of obtaining metals from their ores or compounds which consists in treating electrolytically a fused mass of ore contained in a basin or receptacle formed of the ore itself." What appears prominent in the above specifications and claims was Bradley's idea of employing the electrolytical power of the current to the ore, whereby the metal sought was disrupted from its compounds. It is evident that he did not himself fully understand the peculiar details of the action of the current upon the material; and he seems to have supposed that some other agency was at work than mere heat and atomic disruption thereby, or, if not, that some chemical agency was in operation; for he changed the statement of the general character of his invention by adding the words "or electro-chemical" after the word "electro-metallurgical" as it originally stood, and also said: "It is obvious that other chemical and metallurgical processes may be carried on

Digitized by Google

according to my invention." But this is not very material. He also amended his specifications by saying: "It is also evident that various forms of furnace, built of various materials, may be employed without departing from my invention." He amended his claims, and it is important to refer to these claims as amended, in determining what the parties intended to sell to the Cowles Electric Smelting & Aluminum Company, for they were the existing claims at that time. The first claim was simply "for a process in which the required heat as well as the electrolysis is produced by means of an electric current or currents." The second "for the process of electrolyzing materials in a state of fusion in which the heat required is produced or supplied by means of the current which is employed to effect the electrolysis." The third: "The process which consists in employing an electric current sufficiently powerful, not only to effect the electrolytic decomposition of the ore or compound treated, but also to develop by its passage the heat required to fuse said ore or compound and maintain it in the state of fusion." The rest of the claims were of a somewhat similar character, with some slight changes, except that in some of them he included the unfused surrounding ore as a receptacle in which to carry on the process.

We might stop here for the purposes of the intended comparison, but the subsequent history of this application and its final development is proper to be considered for the purpose of showing what interference with the Cowles applications this application of Bradley's and the invention supposed to be embodied in it might create. In 1887 Bradley again took up the proceedings upon his original application. It was divided into three, two offshoots from the original having been started, and all three were carried through to patents. It would be tedious to follow each successive step. The application went through successive metamorphoses, until it finally emerged in three separate patents; but there was continuity of the essence of the invention. The patent issued upon the original application was for a "process of separating metals from their highly refractory ores, nonconductors in an unfused state, which consists in fusing the ore progressively by a source of heat concentrated directly upon it rather than by an external furnace, and, as fusion takes place, effecting electrolysis by the electric current carried through it." The use of the body of the ore as the receptacle in which the process should take place was expressly stated to be not claimed, and so, also, the specific arrangement of the electrodes. The patent issued upon the first divisional application struck off was for a process of obtaining metals from aluminous and similar ores or compounds, and consisted in fusing and when fused establishing an electric current through a bath of the material to be treated, and by the current and some auxiliary source of heat all concentrated directly upon the material treated, rather than through the walls of a furnace or crucible, maintaining the ore in fusion and electrolyzing it. In the specifications the receptacle in which the process should occur was expressly excluded, though a lining by using the unfused ore for that purpose was retained, and it is again stated

Digitized by Google

that other chemical and metallurgical processes might be carried on according to that invention in substantially the same manner.

The patent founded upon the second of the divisional applications was, quoting the first claim therein, for: "(1) The process of obtaining metals from their ores or compounds consisting in passing an electric current through a fused portion of the ore or compound contained in an unfused body or heap of said ore or compound." It was stated in the specifications that the body of unfused ore might either be formed into an unconfined pile, or in a box or tank lined with the ore itself, and it was stated that by adding to the mass of the ore the process might go on indefinitely. There is no mention of the initial fusing as one of the steps of the process, and there was an express exclusion of it in the statement preliminary to the claims. That process, including such initial fusing, was made the subject of another patent, which latter fact has been already shown by the reference to the patent which we have just previously considered. Nor is there any mention made in the first two claims of any electrolyzing process, unless it is to be implied as a result of passing the current through the fused ore. These claims speak of the process being performed in the material contained "in an unfused body or heap of ore." As the containing ore serves only the purpose of a receptacle, it would seem that so much of the claims is merely structural. When employed as the lining of the tank according to the specifications, the unfused ore performs precisely the same function as the lining of the tank in the Cowles patent, 319,945, which is for a structure and not for a process. But we will not stop to dwell upon this.

Recurring to the situation of the applications of the several parties, it is impossible for us to hold that the Bradley patent was not or might not constitute an interference with any of the Cowles applications. Without referring to all of the points upon which collision might occur, and we think in fact existed, it will be sufficient to compare the applications of A. H. Cowles and its original claims with that of Bradley, as his application stood when the contract with which we are dealing was made. We have already pointed out the characteristics of these two applications. In each of them the process consisted of reducing ores and metallic compounds by depositing the material to be treated between the electrodes of a dynamo-electrical machine, and passing therethrough the electric current. After the initial fusing,—which for the purposes of the comparison may be laid out of the case, because it was not made essential to the Bradley claims as they then stood,—the melted ore in the Bradley process between the poles became the same electrolyte as in the Cowles process, when the latter process was applied to ores or other materials possessing in themselves sufficient conductivity, and probably also when applied to ores or materials with which carbon or some equivalent substance would be advantageously intermixed; because we are satisfied that in this Cowles process, whenever the carbon should be employed, after the initial fusing the current would pass between the electrodes in large meas-

Digitized by Google

ure through the fused ore by reason of the breaking up of the continuity of its paths through the carbon by the progressive destruction of the carbon and the gathering of the metal upon the surfaces of the granules, and because also the paths thus made would offer less resistance to the current than the surrounding mass of carbon and unfused ore; and more especially would this be so if the process was applied to the reduction of highly refractory ores, where the great heat to which the materials must be subjected would render the conductivity of the molten mass approximately that of the carbon, and thus the carbon and the material would become a homogeneous mass with respect to its conductivity. But, be that as it may, it is enough that with respect to the two processes they were not only alike, but identical, in some of their applications. It is said that there are no ores with respect to which the Cowles process would be a successfully operative one without the carbon. But, if the initial fusing be ignored, Bradley's must be equally so.

Referring again to the first claim of the patent to A. H. Cowles, it is readily seen that it in fact includes the whole of Bradley's process, initial fusing and all. "It consists in first bringing a limited quantity of the material to be treated between a pair of electrodes." He says, in his specifications, that at the start the electrodes are placed near together. This is exactly what Bradley did, and for the same purpose. It is not material to know whether, at this stage, the current passes in these processes by an arc or not. The step in the process being the same, and the result the same, it is inferable that the mode in which the current passes is the same in both processes. Then, following the above quotation of the Cowles claim, he adds: "And then gradually increasing the quantity of such material by causing the electrodes to recede from each other." This again is what Bradley does, and these two steps constitute the substance of the process of each of them. Suppose that Bradley had never disclaimed the initial fusing, and had obtained only a patent for his process including that, and Cowles under his patent had gone into the business of smelting ores which do not require the aid of carbon, can it be doubted that he would have infringed the Bradley patent? It is difficult to see how anything even plausible could be said in his defense.

Strenuous effort is made by counsel in behalf of appellee to demonstrate that the leading idea of the Cowles application consisted in the distinctive part of his process which employed the use of carbon intermingled with the ore to serve as a resistance material to generate heat, or to act as a chemical reagent to absorb the extraneous compounds. We think it may be doubted whether this was so, being made, as it was, a contingent element in the process. But, assuming it to be so, it must be answered that, although it was the leading idea, that idea did not constitute the limits of his invention any more than Bradley's idea of initial fusing by the electric arc, or the use of the unfused body of the ore for a receptacle, or the electrolytical process of Bradley, constituted his invention. As a matter of fact, we have no doubt that Bradley's leading idea was

Digitized by Google

the application of the electrolytical agency of the current in his process; but, if it were held that the other features of his invention were thus to be excluded, it would make havoc with most of the claims in his patents. And we are constrained to think that too much importance was attached in the court below to the results of the comparison of the supposed leading ideas thus made. The efficiency of the electric current to break up and separate the chemical compounds of a fused mass of ore by maintaining the current through it is a faculty of the current itself, inherent and indivisible. Bradley's idea of separating it from the factor itself, and exalting it into an independent element or step in his process, was a merely fanciful one. The actual process which he described necessarily involved it, just as the Cowles process also did. The process being the same in other regards, and all the conditions being substantially alike, the electrolyzing energies of the current would operate in a similar manner and produce the like results. Counsel for the appellee states the plain truth when he says that "the passage of an electric current through a fused metallic compound is bound to produce electrolysis in amount proportional to the volume of the current passing."

There is no room for distinguishing them in this respect. It was not necessary that Cowles should have known how the current acted in effecting the reduction, or what peculiar power or energy of the current effected the result. Eames v. Andrews, 122 U. S. 40, 7 Sup. Ct. 1073. The patentee of an invention of a process is entitled to the benefit of all which his process will accomplish. Discoveries of natural forces or of their laws are not the subjects of patents. It is only the employment of such forces by invented means, for useful purposes, which gives the inventor any standing ground. O'Reilly v. Morse, 15 How. 62. And an inventor is entitled to claim for all the capabilities of his process, however prominent he may have made any single idea embodied therein. Further, to distinguish between these leading ideas, it is urged that the idea prominently set forth in Bradley's application was that of the employment of electrolysis in separating metals from the other elements in ores and compounds, and we are satisfied that the fact in this regard is as claimed, and that Bradley had conceived the idea of promoting this agency of the electric current, and making it the characteristic feature of his invention. But we think there is nothing of substance in it which saves his invention from interference with the Cowles patent. Inasmuch as the Cowles process necessarily employed the electric current, it necessarily employed that which was inseparably incident to it.

Disregarding, then, the initial fusing, which Bradley himself disregarded in his original claims, and as well also in the claims in some of his patents; and disregarding the employment of the carbon resistance material, as Cowles did in some of his claims; and seeing also that electrolysis is not an element, but a mere incident, to one of the factors employed in both the Cowles and Bradley inventions,—we should find that their processes were not merely similar, but identical.

Digitized by Google

But complete identity is not necessary. As was stated by Mr. Justice Curtis in Winans v. Denmead, 15 How. 330:

"If the machine complained of were a copy, in form, of the machine described in the specification, of course, it would be at once seen to be an infringement. It could be nothing else. It is only ingenious diversities of form and proportion, presenting the appearance of something unlike the thing patented, which give rise to questions; and the property of inventors would be valueless, if it were enough for the defendant to say: 'Your improvement consisted in a change of form; you describe and claim but one form; I have not taken that, and so have not infringed.'"

This was said in a case where the original patent was for a cylindrical ore body in a railroad car, where the structure held to infringe was hexagonal. But it is equally applicable to inventions for processes. The patentee is entitled to claim, not only that which he precisely claims, but, where he claims for a combination or process embodying the use of certain elements, his claims will include such combinations and processes as adopt substantially the same means; where the variation is only such as common intelligence in that art would suggest. Incidental appliances in operating the substantial means invented would not prevent a second patented invention from infringing upon the first. The language of some of the Bradley claims is broad enough to admit the admixture of carbon, if his invention was a primary one, and the employment of carbon was a mere auxiliary of the current in effecting the reduction, according to the doctrine of Machine Co. v. Lancaster, 129 U. S. 263, 9 Sup. Ct. 299; Proctor v. Bennis, 36 Ch. Div. 740; McCormick Harvesting Mach. Co. v. C. Aultman & Co., 16 C. C. A. 259, 69 Fed. 371; and kindred cases.

This record is not made up for the purpose of enabling the court to decide how far the Bradley invention advanced the prior art. If it was all he claimed for it, it first supplied the efficient means of reducing to the service of the public an agency of great power and value in a highly important industry. To such an invention the courts will give precedence according to its breadth, and will treat all modifications of it which involve only the exercise of the ordinary skill and learning of that art as comprehended in the invention. And having regard to the Bradley patents, it seems not too much to say that if the claims are valid for what they import, and so have priority in the field occupied by them, they would be entitled to a large privilege. The testimony before us shows that, when the Cowles brothers brought out their invention designed for a similar purpose, its novelty and importance were recognized by scientific and practical men, and it was made the theme of discussion and congratulation in learned societies.

The rule to which we have above adverted is illustrated by the well-known case of Tilghman v. Proctor, 102 U. S. 707, in which the patent alleged to have been infringed was for a process of obtaining fat acids and glycerine from fatty substances. In describing his process Tilghman had stated that it consisted of subjecting a mixture of fat and water in certain proportions to the action of heat and pressure. After deciding the patent to be valid, the court considered the defense of noninfringement. There were several grounds

Digitized by Google

taken by the defendant in support of that defense, one of which was that the defendant added to the mixture of fat and water from 4 to 7 per cent. of lime, which it was claimed stimulated the union of the elements in the mixture. This it was claimed distinguished their process from that of the complainant. But this contention did not prevail. The court, by Mr. Justice Bradley, said:

"They use water in admixture with fat, heated to a high degree, far above the boiling point, and yet subjected to such pressure as to prevent the water from being converted into steam; and though they may also use other things at the same time, which other things may facilitate the operation, or render a less degree of heat necessary than would be required when water alone is used, and thus actually improve the process of Tilghman, yet this process is included in their operation, and forms the basis of it. It is idle, therefore, to say that they do not infringe Tilghman's patent. It is unnecessary to determine what precise part the lime used by the defendants plays in their process; whether, as the complainant contends, it saponifies the fat to a certain extent, leaving the remainder to be acted upon by the water alone purely after the process of Tilghman; or whether, as the defendants contend, the lime produces a more perfect and active commixture of the fat and water, or predisposes the fat to unite with the requisite elements of water necessary for producing glycerine and the fat acids. In either case, the process of Tilghman, modified or unmodified by the supposed improvement, underlies the operation performed in the defendant's boilers."

And in the case of the driven-well patent (Eames v. Andrews, 122 U. S. 40, 7 Sup. Ct. 1073), which was also for a process, there was a similar ruling. The suit was brought upon a reissued patent. One of the defenses was that the claim sued on was broadened in the reissue. This was rested upon the fact that the original specifications and claims in express terms limited the process to "places where no rock is to be penetrated," whereas in the claim of the reissued patent there was no such limitation. But the court held there was no substantial difference between the two when read with reference to the subject-matter and in the light of facts known to those informed upon the subject. It was known that, if rock should be met with in driving, the process must be supplemented by drilling, which, although a distinct operation, was one which would occur to the common understanding as a means of helping out the operation when that was embarrassed by unusual difficulties. And it was held that this did not change the substantial nature of the process. Said the court, by Mr. Justice Matthews:

"It does not follow, either from the amended or the original patent, that a driven well, according to the process described, may not be constructed and operated, notwithstanding in its construction some rock has to be penetrated. There may be a layer of rock on the surface. When this is removed or cut through, a driven well may then be constructed in the space thus uncovered from the obstruction. So, if a stratum of rock is met in the course of driving the rod or tube, that layer may be penetrated, not by driving the rod or tube through it, but by other usual means of boring and drilling. After it is passed, the rod or tube, having been inserted in the opening made through the rock, may then be driven in the usual manner through the remainder of its course until it reaches a water-bearing stratum of earth, as if no rock had been met in its passage."

Taking the drawing accompanying the Cowles specifications, which illustrate not only the apparatus but by clear suggestion the process itself, it is evident that a person ordinarily skilled in the art would

Digitized by Google

have no difficulty in constructing it upon the specifications of the Bradley application. There is a box or tank having a lining for the purpose of saving the walls from injury, the two electrodes running through the opposite sides of the box and made adjustable so that their extremities could be brought close together or moved apart as the requirements of the operation would indicate, and the material to be operated upon located between the electrodes and in contact therewith. The material might be ore and carbon mixed, as shown in the diagram, or it might be the material alone, according to its nature. It is an established rule, for the purpose of determining whether there is a substantial identity or equivalency of two inventions, that we may apply this test, and inquire whether the construction which is alleged to infringe may, by the skill of one conversant with the art, be built upon the specifications of the patent said to be infringed.

Something is sought to be inferred from the subsequent conduct of the parties to aid in the construction of the contract. Where the instrument is of dubious import, proof of this kind is receivable in order to show in what sense the parties understood it. But such proof is liable to open up a controversy in regard to what the conduct of the parties really was, and can only be resorted to when the contract, read in the light of surrounding facts, leaves the construction in doubt. But, if such doubt existed in the present case, the action of the parties here referred to gives nearly equal ground for opposite conclusions. It is urged that the Cowles Electric Smelting & Aluminum Company did not prosecute the Bradley application, but allowed it to lie dormant in the patent office for many years. On the other hand, Bradley himself did not move again upon it for nearly two years after the contract was made. And we think it may fairly be said that the Cowles Company, finding their own and that of Bradley and Crocker sufficient for their purposes, had no special requirement for the Bradley application, which at that time stood rejected, though such rejection was not final. While, on the other hand, if Bradley supposed his own application still available for his own advantage, it is somewhat singular, knowing that it related to a then rapidly-developing industry, he should have left it so long neglected. Bradley claims that his process is capable of being carried on continuously by simply adding unfused ore, but there is the same capacity in this respect in the Cowles process. In either of them, by tapping the tank or other containing vessel at or near the bottom and making provision for a constant supply of material by any common method, the process could be continued indefinitely. Such supplements would not alter the process itself, and would indeed be only such as ordinary skill would provide if it should be found desirable to employ them. Upon the whole case, we are satisfied that the inventions covered by the Bradley application were intended to be included by the terms of the contract; that Bradley's unauthorized proceedings thereon, whereby he procured his patents, must be held to inure to the benefit of the Cowles Electric Smelting & Aluminum Company. The result is that the decree below should be reversed, the original bill dismissed, and the relief prayed by the cross bill should be granted.

Digitized by Google

(79 Fed. 355.)

EXCELSIOR COAL CO. v. OREGON IMP. CO.

(Circuit Court of Appeals, Ninth Circuit. February 23, 1897.)

No. 196.

PATENTS—INFRINGEMENT—COAL SCREENS.

The Roberts reissue, No. 7,341, for an improvement in coal screens and chutes, is not infringed by an apparatus lacking the reservoir which is the principal feature of the Roberts patent, and controlling the flow of coal only by the use of gates at the upper and lower ends of the chute. Excelsior Coal Co. v. Oregon Imp. Co., 16 C. C. A. 219, 69 Fed. 246, reaffirmed.

Appeal from the Circuit Court of the United States for the Northern District of California.

John L. Boone, for appellant.

Sydney V. Smith, for appellee.

Before GILBERT and ROSS, Circuit Judges, and HAWLEY, District Judge.

GILBERT, Circuit Judge. After a rehearing of this cause, we have no doubt that the former decree of this court affirming the decree of the circuit court in dismissing the complainant's bill, reported in 16 C. C. A. 219, 69 Fed. 246, was correct. Our conclusion at that time was based upon the decision of the supreme court in the case of Black Diamond Coal Min. Co. v. Excelsior Coal Co., 156 U. S. 611, 15 Sup. Ct. 482. The complainant's patent is for an improvement in coal screens and chutes. It consists in the combination of a receiving hopper, with a reservoir, a screen, and a chute, so arranged in a portable machine that coal may be continuously dumped into the hopper from a swinging tub as it is unladen from the vessel, or otherwise, while at the same time it is delivered screened in carts from the chute. The principal feature of the patent is the reservoir, O. The reservoir is directly below the hopper and at the top of the chute, or rather it is an enlargement of the upper end of the chute. In the patent it is said that the function of the reservoir is that of "a store room, so that, in case of temporary delay in the vehicle carrying the coal to the yards, the work of unloading the ship or other vessel can proceed without the necessity of piling the coal upon the wharf." In the case of Black Diamond Coal Min. Co. v. Excelsior Coal Co., above referred to, the coal screen which was used by the Black Diamond Company differed from the appellee's device in this case only in the fact that it had but one gate in the chute, while the appellee's has two. The supreme court, in the opinion in that case, referring to the patent, said:

"If there be any invention at all, then, in the combinations specified in the third and fourth claims, it is in the introduction of the reservoir, O, beneath the hopper, which is really an enlargement of the chute, for the purpose of affording a lodgment for the coal until it is drawn off for use. Great stress was laid by plaintiff's counsel upon this feature of the invention, but, even conceding it to be patentable, there is nothing corresponding to it in the defend-

Digitized by Google

ant's machine. On the contrary, the coal falls through a square opening in the bottom of the hopper directly upon the chute, where it is detained by a gate, which is kept closed until the coal is withdrawn. It is evident that the hopper itself is substantially the only reservoir, although a small amount of coal is necessarily detained in the upper part of the chute until the gate is raised. The chute is nowhere enlarged to form a reservoir."

The gates in the appellee's screen are placed, the one at the top of the chute, and the other near its lower end. If there is no reservoir in the Black Diamond Company's chute, it necessarily follows that there is none in that of the appellee. The presence of two gates in the appellee's chute, as the same are used, cannot create a reservoir corresponding to that of the patent. Both gates must be opened in order to permit the outflow of coal. The appellee's chute is not enlarged so as to furnish a reservoir. It is but a means of outlet from the hopper, which is the only reservoir, and it is not itself a storage place for coal. There is clearly no infringement. The decree of the circuit court will be affirmed, with costs to the appellee, as before ordered.

(79 Fed. 365.)

THE BERTHA M. MILLER.

TARR et al. v. JORDAN et al.

(Circuit Court of Appeals, First Circuit. March 23, 1897.)

No. 204.

1. MARITIME LIENS—SUPPLIES—PRESUMPTION OF NECESSITY.

   To create a lien for supplies ordered by the master in a foreign port, it must appear that the supplies were reasonably necessary, and that a credit to the vessel is necessary. The necessity for the supplies may be presumed from their nature, and from the fact that the master ordered them; and, in the absence of other facts, the necessity for binding the vessel may also be presumed. But if the supply man knows that the master has funds of the owners, or of his own, credit to the vessel is not authorized, and no lien is created.[1]

2. SAME.

   One furnishing a small amount of supplies to a fishing vessel in a foreign port, on the order of the master, has no lien, though he give credit on his books to the vessel and owners, when he knows that the vessel brought in and sold for cash sufficient fish to furnish means of payment. Nor is it material that the vessel departed on the day of receiving the supplies, no fraud being practiced.

Appeal from the District Court of the United States for the District of Massachusetts.

This was a libel in rem by Fritz H. Jordan and others against the schooner Bertha M. Miller (James G. Tarr and others, claimants) to enforce an alleged lien for supplies. The district court rendered a decree for libelants, and the claimants have appealed.

[1] As to the creation of maritime liens for supplies and services, and the presumptions in relation to the credit of the vessel, see note to The George Dumois, 15 C. C. A. 679.

Digitized by Google

An opinion was filed below by Nelson, District Judge, July 16, 1896, in the following terms:

The supplies in this case were furnished to the vessel in a foreign port upon the order of the master. The evidence is sufficient to prove that the supplies were furnished upon the credit of the vessel, and that the libelants had no knowledge that the vessel was run on shares or under a charter that provided that the charterers should supply the vessel for the voyage. As the supplies were necessary for the voyage, and the prices charged were reasonable, the libelants have, by the maritime law, a lien on the vessel therefor. Decree for libelants for $114.29, with interest from September 1, 1894, and costs.

Michael J. McNeirny, for appellants.

Eugene P. Carver and Edward E. Blodgett, for appellees.

Before COLT and PUTNAM, Circuit Judges, and WEBB, District Judge.

WEBB, District Judge. The schooner Bertha M. Miller, owned in Gloucester, in the state of Massachusetts, was by her owners chartered to the captain and crew for the business of "fresh fishing," in March, 1894, for the fishing season. By the terms of the charter, the captain and crew were to have sole control of the whole vessel, during the season (unless sooner the owners should terminate the charter, the right to do which was reserved), in the prosecution of the fishing business. The charterers were to provide everything necessary for the contemplated business at their own expense, and it was expressly agreed that neither the owners nor the vessel should be liable for any debts or liabilities incurred by the charterers for fishing gear, outfits, provisions, or other expenses in the prosecution of the fishing enterprise, but that for all such debts the charterers should be solely responsible. As compensation for the use of the vessel, the owners were to receive one-fifth of the gross proceeds of the fish which might be caught on said schooner, or in the prosecution of the fishing enterprise, during said time, all expenses of towing, wharfage, and weighing being first deducted from said gross proceeds. There can be no doubt that, under this charter, the charterers became owners of the schooner pro hac vice; that is, so long as the charter should continue in force. The "fresh fishing business" was prosecuted along the coast, and consisted of catching fish, which were kept fresh, by being packed in ice, until the vessel could run into some port where her fish could be sold. The trips were from one or two days to two weeks in duration, according to circumstances, depending on the distance it might be necessary to go, and the success in taking fish. While this charter remained in force, August 14, 1894, the schooner, with a fare on board, ran into the port of Portland, in the state of Maine, to make sale of her catch. While there, the captain, finding the vessel stood in need of provisions and supplies for the further prosecution of her business, ordered of the libelants what was so necessary, and the articles ordered were supplied.

That Portland was a foreign port for this schooner is not disputed. That fact gave the master power to subject the vessel to

Digitized by Google

a maritime lien for necessary supplies, furnished by one having no knowledge of the particular terms on which he was sailing her. But this power of the master is not without limitation or qualification. It must appear that the supplies are reasonably necessary, and that the credit to the vessel herself is necessary. The necessity of the supplies is presumed from their nature, and from the fact that the master orders them; and, in the absence of other facts, the necessity for binding the vessel may also be presumed. But if the material man knows that the captain has funds or means of his owners, or of his own, credit to the vessel is not authorized, and no lien is created. The Lulu, 10 Wall. 192; Thomas v. Osborn, 19 How. 22; The Kolorama, 10 Wall. 204; The Patapsco, 13 Wall. 329; The Grapeshot, 9 Wall. 129. When the Bertha M. Miller, in August, 1894, sailed into Portland, she had on board the fish caught on her trip, and they were to be sold there. Whether they belonged to the owners or to the captain and his associates, they furnished the captain with means to pay for the small quantity of supplies his vessel wanted. As matter of fact, he had bargained his fish before the supplies were ordered, and was to be paid for them in cash as soon as they were delivered. The libelants knew the business in which the schooner was engaged, and how that business was conducted. We do not mean to be understood as saying that they knew anything about the charter of the vessel. Had the schooner come in empty, after an unsuccessful fishing cruise, we have no doubt that she might have been made subject to a lien for the supplies furnished by these libelants.

Some controversy has arisen on the question whether the libelants credited the vessel or her owners for those supplies. The evidence leads to the conclusion that the libelants made the charges on their books to the schooner and owners, showing that they looked to both for payment. But the important question now is whether they had a right to charge these supplies to the vessel, and make her responsible for them. In view of all the evidence, we cannot doubt that the libelants not only knew the nature and methods of the business of the schooner, but that they also knew that she brought in for a market a fare of fish, which the captain could make use of to procure necessaries, without binding his vessel. Under such circumstances there was no right to charge those supplies to the schooner, and the form of entry on the libelants' book was of no effect.

But it is contended that, inasmuch as the vessel departed on the same day the supplies were put aboard, to pursue further her fishing business, the charge to her was warranted. The rights and obligations of the parties must be determined by the facts as they existed when the credit was given, and not by subsequent events, especially if there was no fraud practiced. In this case the master of the schooner, after receiving pay for his fish, called at the libelants' place of business, to pay for his supplies, and was postponed by the statement that the libelants had not had time to make up their bills. It was only after this that he sailed from Portland.

Had this cause depended alone upon the facts noticed in its opin-

Digitized by Google

ion by the district court, we should unhesitatingly have affirmed its decree. But as it appears to us that, however necessary the supplies were, there was no necessity for furnishing them on the credit of the vessel, and that this was known to the libelants, the decree must be reversed. The decree of the district court is reversed, and the case is remanded to that court, with directions to dismiss the libel, with costs for the appellants in each court.

(79 Fed. 368.)

NEW ZEALAND INS. CO. v. EARNMOOR S. S. CO., Limited.

(Circuit Court of Appeals, Ninth Circuit. February 8, 1897.)

1. ADMIRALTY JURISDICTION — FEDERAL COURTS — STATE STATUTES — GENERAL AVERAGE—INTEREST.

   In the exercise of their admiralty and maritime jurisdiction, the federal courts are governed solely by the legislation of congress and the general principles of the maritime law, and are not bound by state statutes. Accordingly, *held*, that in its determination of the question of the allowance of interest in a libel upon a contract of marine insurance, a court of admiralty is not to be guided by state statutes as to the method of ascertaining the proportions of a general average loss and as to the allowance of interest on contracts.

2. INTEREST—MARINE INSURANCE.

   When the owner of a vessel has demanded from an insurer an amount claimed to be due under the policy of insurance by reason of injury to the vessel from perils insured against, and the insurer, while admitting a less amount to be due, has resisted payment of the amount claimed throughout a long litigation, but has never tendered the amount admitted, it is proper for a court of admiralty to allow interest from the time of the demand on the amount finally found to be due, though slightly less than that claimed.

Appeal from the District Court of the United States for the Northern District of California.

Andros & Frank, for appellant.

Chas. Page, for appellee.

Before GILBERT and ROSS, Circuit Judges, and HAWLEY, District Judge.

ROSS, Circuit Judge. The appellant, New Zealand Insurance Company, was respondent in the court below to a libel brought by the appellee, the Earnmoor Steamship Company, Limited, upon a policy of marine insurance, by which the insurance company insured the appellee against any loss on its steamship Earnmoor which might be caused by any one of the perils usually set forth in a policy of marine insurance. Both companies were incorporated under the laws of the United Kingdom of Great Britain and Ireland; the steamship company having an office for the transaction of its business at Newcastle, England, and the insurance company having an office for the transaction of business in the city and county of San Francisco, state of California, in which city and county the policy sued on was issued. On or about January 10, 1889, and during the life of the policy, the ship, bound on a voyage from Philadelphia to St. Thomas, while pro-

Digitized by Google

ceeding down the Delaware river met with a serious disaster, requiring salvage services and subsequent repairs, which gave rise to a claim in general and particular average against the appellant as underwriter upon the hull and appurtenances of the vessel. In due time an average adjustment was made by adjusters, which shows a loss by the shipowner in particular and general average of a certain amount. Of this amount the appellant was called on to pay a share proportionate to the amount insured by it. The average statement was presented to the appellant July 23, 1889. It charged in particular average, $43,344.70, and in general average, $41,598.44. In the settlement based upon this statement the appellant was charged, as its proportion of those amounts, $997.41. The appellant declined to admit its liability for the amount so claimed as loss, upon the ground that certain items in the adjustment were improperly considered and admitted by the adjusters. These items were specifically pointed out by the appellant, and a restatement made by it, omitting the items objected to, and stating what it conceded to be the proper amounts in particular and general average, as follows: In particular average, $41,502.36; in general average, $35,480.36. It is true that in the statement so presented by the appellant the amount of the appellant's proportion of the particular and general average was not stated, but its ascertainment upon the basis presented was a mere matter of mathematics, to which the maxim, "Id certum est, quod certum reddi potest," may be properly applied. No tender, however, of any amount under the policy was made by the appellant. On the 22d day of January, 1892, the appellee filed its libel in the court below to recover the proportion of the entire particular and general average loss suffered by the shipowner shown to be due by the adjuster's statement, and amounting to the sum of $997.41. To the libel thus brought the appellant appeared, and contested the amount properly payable by it upon the policy, contending that the sum properly due from it was a less sum, and only its proportion of the amounts given in its statement heretofore referred to. No tender of such proportion, however, was made by the appellant. The litigation thus commenced continued for several years, during which time a great deal of testimony was taken in different parts of the country. Upon the final hearing the court below decided that, except in two particulars, the adjustment made by the adjusters, and upon which the original demand of the appellee was made upon the appellant, was correct. 73 Fed. 867. All other objections to that adjustment were, at the hearing in the court below, overruled, with the consent of the appellant; and by agreement of the parties the adjustment was returned to the adjusters, to be made to conform to the opinion of the court in the particulars referred to. The actual difference between the amount claimed to be due under the original adjustment and that found to be due by the court below was $43.60. The question which constitutes the ground of the present appeal then arose in the court below; that is to say, the question as to whether the appellant should be required to pay interest on the amount found to be due upon the policy. The court below held that the amount found due should bear interest at the rate of 7 per cent. per annum from July 23,

Digitized by Google

1889,—the date the average statement was presented to the appellant, —and so adjudged. It is from that portion of the decree allowing such interest that the present appeal is taken.

It is urged on the part of the appellant that under the statute of the state of California the appellant is not chargeable with interest. In support of that position, sections 2152 and 1917 of the Civil Code of California are cited. Those sections are as follows:

"Sec. 2152. The proportions in which a general average loss is to be borne must be ascertained by an adjustment, in which the owner of each separate interest is to be charged with such proportion of the value of the thing lost as the value of his part of the property affected bears to the value of the whole. But an adjustment made at the end of the voyage, if valid there, is valid anywhere."

"Sec. 1917. Unless there is an express contract in writing, fixing a different rate, interest is payable on all moneys at the rate of seven per cent. per annum after they become due, on any instrument of writing, except a judgment, and on moneys lent, or due on any settlement of account, from the day on which the balance is ascertained, and on moneys received to the use of another and detained from him. In the computation of interest for a period less than a year, three hundred and sixty days are deemed to constitute a year."

The argument for the appellant is that, while there is not an express agreement in the policy as to the form and manner by which the amounts due from the several contributory interests, or that of the underwriters who have taken risks on those interests, should be ascertained, the state statute quoted points out how this shall be done, and that the libelant was bound to observe the provisions of that statute, and that, if it did not, it was its fault, and not that of the respondent; that an average statement is in the nature of a statement of an account rendered, which account must be settled, and the balance ascertained; and that the word "ascertained" imports, ex vi termini, certainty, and that it was for the assured to fix definitely the amount due from the interests underwritten by the insurer, before which time no interest could properly accrue. All this may be true enough in a suit pending in a court of the state to which the state statute would apply. But that statute is inapplicable to a court of admiralty.

"In the exercise of their admiralty and maritime jurisdiction," says Justice Story in the case of The Chusan, 2 Story, 455, Fed. Cas. No. 2,717, "the courts of the United States are exclusively governed by the legislation of congress, and, in the absence thereof, by the general principles of the maritime law. The states have no right to prescribe the rules by which the courts of the United States shall act, nor the jurisprudence which they shall administer. If any other doctrine were established, it would amount to a complete surrender of the jurisdiction of the courts of the United States to the fluctuating policy and legislation of the states. If the latter have a right to prescribe any rule, they have a right to prescribe all rules; to limit, control, or bar suits in the national courts. Such a doctrine has never been supported, nor has it for a moment been supposed to exist, at least so far as I have any knowledge, either by any state court or national court within the whole Union. For myself, I can only say that during the whole of my judicial life I have never, up to the present hour, heard a single doubt breathed upon the subject. * * * The admiralty jurisdiction covers the whole maritime law applicable to the case in judgment, without the slightest dependence upon or connection with the local jurisprudence of the state on the same subject. The subject-matter of admiralty and maritime law is withdrawn from state legislation, and belongs exclusively to the national government and its proper functionaries."

Digitized by Google

In The New York v. Rea, 18 How. 223, the supreme court, in speaking of a statute of the state of New York in respect to shipping, said:

"This is a rule of navigation prescribed by the laws of New York, and is doubtless binding upon her own courts, but cannot regulate the decisions of the federal courts administering general admiralty law. They can be governed only by the principles peculiar to that system as generally recognized in maritime countries, modified by acts of congress, independently of local legislation."

See, also, The Selah, 4 Sawy. 40, Fed. Cas. No. 12,636; Watts v. Camors, 10 Fed. 148; The Kate Tremaine, 5 Ben. 60, Fed. Cas. No. 7,622.

That a marine insurance contract is a maritime contract is not open to question. Insurance Co. v. Dunham, 11 Wall. 1. The propriety of the action of the court below in allowing interest upon the amount found to be due the appellee upon the policy of insurance in question is, therefore, to be tested by the rules applicable to courts of admiralty. One of the admiralty rules prescribed by the supreme court is as follows: "In cases in admiralty, damages and interest may be allowed if specially directed by the court." Rule 23. This leaves the matter of interest to the sound discretion of the court. The circumstances of the present case satisfy us that it was wisely and justly exercised in the present instance by the court below. The case would be very different if the appellant had tendered to the appellee the amount it, in effect, admitted to be due from it under the policy, but at no time prior to the decision of the court below did it do so. The appellant had, of course, the right to contest the amount claimed from it; but surely it ought to have offered to pay the amount it admitted to be due. Instead of doing so, it withheld from the appellee for nearly seven years what it admitted was justly due from it; and at the end of a costly litigation, extending through that long period, the result of which showed that there was a difference of only $43.60 between the amount originally demanded by the appellee and that actually due from the appellant, contends that the small difference found and adjudged by the court below to exist deprived the assured of the right to interest on the proper amount from the date when it should have been paid or tendered. We are of opinion that the court below was clearly right in rejecting that contention, and in allowing the appellee interest from July 23, 1889, on the amount found to be due from the appellant under the policy sued on. The judgment is affirmed.

(79 Fed. 385.)

DONALLAN v. TANNAGE PATENT CO.

(Circuit Court of Appeals, First Circuit. March 13, 1897.)

No. 189.

APPEAL—DISMISSAL ON APPELLANT'S MOTION.

An appellant cannot of right dismiss his own appeal; and, when an appeal is dismissed on his motion, he is not entitled, in the absence of special equitable considerations, to have the order expressed to be without preju-

Digitized by Google

dice; but where an appeal from an interlocutory order granting a preliminary injunction was so dismissed, the order may state the fact that the dismissal was before any hearing on the merits.

Appeal from the Circuit Court of the United States for the District of Massachusetts.

This was a suit in equity by the Tannage Patent Company against John E. Donallan for infringement of letters patent No. 291,784 and 291,785, for a process of tanning leather. The circuit court made an order granting a preliminary injunction (75 Fed. 287), and the defendant appealed. The cause was heard on appellant's motion to dismiss its appeal without prejudice.

Geo. L. Roberts, James H. Lange, and W. Orison Underwood, for appellant.

Frederick P. Fish and Wm. K. Richardson, for appellee.

Before PUTNAM, Circuit Judge, and ALDRICH and BROWN, District Judges.

PUTNAM, Circuit Judge. This is an appeal from an interlocutory order or decree granting a preliminary injunction. The appellant files the following motion:

"Now comes the original defendant in the above cause, the appellant before this court, and moves that the appeal taken by him from the interlocutory order or decree of the circuit court, granting a preliminary injunction, be dismissed, without prejudice to any proceedings in the circuit court, or to the right of the defendant to take any subsequent appeal, and without prejudice to the questions which may be raised by such subsequent appeal if lawfully taken, but with costs of the appeal to the appellee."

The appellee does not object to the dismissal of the appeal, but it does object to the qualifying expressions asked for.

An appellant cannot as of right dismiss his own appeal. U. S. v. Minnesota & N. W. R. Co., 18 How. 241, 242. That ordinarily, on a dismissal on his own motion, the appellant is not entitled to an order expressed without prejudice, follows from what is said in the case cited, at page 242, that usually the court will not allow such a dismissal if the appellant intends at some future time to bring another appeal. How very cautious the supreme court usually is to shut out presumptions of any qualification in connection with such orders appears from U. S. v. Griffith, 141 U. S. 212, 11 Sup. Ct. 1005.

Where, after a hearing, a cause is disposed of by the court on appeal, for some reason not touching the merits, it is now well settled that the judgment should usually show that it is without prejudice. So, on his own motion to dismiss, an appellant may sometimes show inadvertence or mistake or some other special reason which may entitle him to equitable consideration and a special order. But we have no suggestion of any such exceptional matter here. We have no judicial knowledge of anything except what we have stated, and that there has been no hearing by us on the merits. Whether, under our expressions in Gamewell Fire-Alarm Telegraph Co. v. Municipal Signal Co., 9 C. C. A. 450, 61 Fed. 208, 209, and in Marden v. Manufacturing Co., 15 C. C. A. 26, 67 Fed. 809, the ap-

Digitized by Google

pellant is not, in any event, sure of all he desires to reserve, is for him to consider. As he moves to dismiss his appeal of his own volition, we have no occasion whatever to aid him, under the circumstances of the case, either by any special order, or by any expressions of opinion. We will therefore adopt the usual order entered on these motions in the supreme court and here, adding to it sufficient to advise the circuit court of what appears on our records, that there has been no hearing on the merits of this appeal. On the motion of the appellant, and before any hearing on the merits, it is ordered that this appeal be dismissed, with the costs of this court for the appellee, and that a mandate issue forthwith.

(79 Fed. 407.)

UNITED STATES v. SAUNDERS.

(Circuit Court of Appeals, First Circuit. March 23, 1897.)

No. 198.

1. SUITS AGAINST UNITED STATES—SET-OFF.
   Under the act of March 3, 1887 (24 Stat. 505, 506), providing for the bringing of suits against the United States, the court has power to render judgment in favor of the United States for any balance which may be found due them upon a set-off or counterclaim.
2. RECOVERY BY UNITED STATES OF MONEY PAID BY MISTAKE.
   The rule applied that the United States have the right to recover moneys paid by the errors of their disbursing officers, as much where the error is one of law as of fact, provided only the moneys belong to the United States ex æquo et bono.

Appeal from the District Court of the United States for the District of Maine.

Albert W. Bradbury, U. S. Atty.
Geo. E. Bird, for appellee.

Before COLT and PUTNAM, Circuit Judges, and ALDRICH, District Judge.

PUTNAM, Circuit Judge. The appellee, who had been a marshal of the United States for the district of Maine, brought his petition in the district court for that district against the United States for $360, now admitted to be due him for sundry attendances before commissioners of the circuit court. Under Act March 3, 1887, c. 359, §§ 1, 6 (24 Stat. 505, 506), entitled "An act to provide for the bringing of suits against the government of the United States," the United States filed a set-off and counterclaim for sundry payments made the petitioner by their disbursing officers, amounting to $504, which payments, under the rule in U. S. v. McMahon, 164 U. S. 81, 17 Sup. Ct. 28,—decided after the judgment of the district court in this case,—were unauthorized. The record shows that there is no dispute as to the amount of these payments. The statute cited not only authorizes, by section 6, this defense, but it also, in section 1, confers jurisdiction to "hear and determine" set-offs

Digitized by Google

and counterclaims; so that, although it does not expressly direct a judgment for the United States for a surplus, if one be found in their favor, yet it is to be presumed that it adopts the usual practice with reference thereto. Indeed, in McElrath v. U. S., 102 U. S. 426, a judgment of the court of claims for a balance found due the United States on a defense of set-off, under section 1061 of the Revised Statutes, and reported in 12 Ct. Cl. 201, was affirmed; and the Revised Statutes expressly authorized such a judgment. Although the provisions of the Revised Statutes in regard to the prosecution of claims against the United States were to some extent repealed by the act of March 3, 1887, yet the latter statute provided as follows:

"Sec. 4. That the jurisdiction of the respective courts of the United States proceeding under this act, including the right of exception and appeal, shall be governed by the law now in force, in so far as the same is applicable and not inconsistent with the provisions of this act; and the course of procedure shall be in accordance with the established rules of said respective courts, and of such additions and modifications thereof as said courts may adopt."

Therefore, in any view of the matter, we have no doubt of the power to render judgment in favor of the United States for any balance which may be found due them. The validity of the provision conferring jurisdiction to hear and determine such set-offs and counterclaims was, in effect, settled in McElrath v. U. S., 102 U. S. 426, already cited. Whatever doubt may have existed under the earlier decisions of the supreme court as to the general right of the United States to recover moneys paid by the errors of their disbursing officers, as much where the error is one of law as of fact, provided only the moneys belong to the United States ex æquo et bono, was removed by Wisconsin Cent. R. Co. v. U. S., 164 U. S. 190, 212, 17 Sup. Ct. 45. This decision applies fully to the claims made by the United States in the case at bar. Whether under Chase v. U. S., 155 U. S. 489, 15 Sup. Ct. 174, and U. S. v. Adv, 22 C. C. A. 223, 76 Fed. 359, this case should have been brought up on error, instead of by appeal, we are not called on to determine. The judgment of the district court is reversed, and the case is remanded to that court, with directions to enter a judgment for the United States on its set-off and counterclaim for the balance of $156, without costs for either party.

(79 Fed. 420.)

UNION GUARANTY & TRUST CO. v. ROBINSON.

(Circuit Court of Appeals, Eighth Circuit. March 1, 1897.)

No. 855.

1. BONDS—SIGNATURE OF CORPORATION.

It makes no difference in what form an obligor signs a bond, if it appears that the purpose was to bind himself. And where the name of a corporation, the principal in a bond, appeared in full in the body of the bond, and its seal was impressed opposite the attestation clause, between the obligatory part and the condition, and at the close of the whole instrument the names of the president and secretary were signed, this being its customary method of executing sealed instruments, it is binding; and the surety cannot

Digitized by Google

complain that the bond was not executed by the principal, especially where it recognized the signature as sufficient by signing right below it.

2. INSURANCE—INDEMNITY BOND—ACTION BY BENEFICIARY.
Under Sand. & H. Dig. Ark. § 4133, a bond executed by an insurance company to indemnify policy holders, though by its terms made to the state of Arkansas, is for the use and benefit of the beneficiaries in the policies of insurance issued in that state, and any such beneficiary can maintain an action for breach of the condition of the bond.

3. AGENTS—HARMLESS ERROR.
The authority of an agent cannot be shown by proof of his admissions, but such proof is not prejudicial where the agency in question is abundantly proved in other ways.

4. PRINCIPAL AND SURETY—EFFECT OF JUDGMENT AGAINST PRINCIPAL.
A judgment against an insurance company on a policy of insurance is, if not collusive, prima facie evidence against the surety in a bond executed by the company to indemnify policy holders.

5. INSURANCE—BOND TO INDEMNIFY POLICY HOLDERS—MEASURE OF DAMAGES.
Where the plaintiff in a judgment against an insurance company upon a policy of insurance sues on a bond executed by the company to indemnify policy holders, the proper measure of damages is the amount of the judgment, including the costs, and interest thereon.

In Error to the Circuit Court of the United States for the Eastern District of Arkansas.

This was an action at law brought by Minnie Robinson against the Union Guaranty & Trust Company upon a bond executed by the United States Mutual Accident Association as principal, and the Union Guaranty & Trust Company as surety. In accordance with the verdict of a jury, judgment was entered for plaintiff, and defendant brought this writ of error.

On May 30, 1891, the United States Mutual Accident Association of the City of New York, by its policy of that date, under its seal, and signed by Charles B. Peet, president, and James R. Pitcher, secretary, of said association, in consideration of the membership fee and the warranties and agreements contained in his application for membership, accepted Emile O. Moore, of Helena, in the state of Arkansas, and insured him against personal bodily injuries from external, violent, and accidental means, subject to conditions attached to said policy, at specified rates as to the described injuries; and in case of death from such injuries alone, and within 90 days, said association agreed to pay $5,000 to beneficiaries named in said policy. Said Emile O. Moore died at Helena, Ark., February 16, 1893, and the defendant in error here, claiming that she had been substituted as the beneficiary under said policy in case of the death of the assured, and that the assured came to his death by external, violent, and accidental means, commenced an action upon said policy against said United States Mutual Accident Association in the United States circuit court for the Eastern district of Missouri, in which action said association duly appeared and answered; and such proceedings were duly had therein that upon the trial of such action, and on the 20th day of May, 1895, the said Minnie Robinson duly recovered judgment in said circuit court against the United States Mutual Accident Association of New York aforesaid for her damages, $5,379.16, and costs, taxed at $216.52. 68 Fed. 825. To enable the said United States Mutual Accident Association to transact any business in the state of Arkansas, and in compliance with the statutory enactment of that state, the said United States Mutual Accident Association, as principal, and the Union Guaranty & Trust Company, the plaintiff in error here, as surety, on the 4th day of June, 1893, executed their joint bond, whereby they became bound to the state of Arkansas in the sum of $20,000, reciting that the said Mutual Accident Association proposed to transact the business of accident insurance in that state for one year from that date, and conditioned that it should promptly pay all claims arising and accruing to any person or persons during said term by virtue of any policy issued by the com-

Digitized by Google

pany, when the same should become due. Said bond was approved and filed with the auditor of said state of Arkansas. The said Mutual Accident Association failing to pay said judgment, the defendant in error commenced this action against the plaintiff in error, as surety upon said bond; and upon the trial, and in accordance with the verdict of the jury, judgment was rendered in favor of the defendant in error for the amount of said former judgment, interest, and costs.

John McClure, John W. Blackwood, and John E. Williams, for plaintiffs in error.

George H. Sanders, for defendant in error.

Before SANBORN and THAYER, Circuit Judges, and LOCHREN, District Judge.

LOCHREN, District Judge, after stating the case as above, delivered the opinion of the court.

1. The certified copy of the bond sued upon was properly admitted in evidence. Sand. & H. Dig. Ark. § 2881.

2. The execution of the bond by the surety, the plaintiff in error, was not disputed; but it was claimed that the bond was not executed by the principal, the United States Mutual Accident Association, and was therefore incomplete and not binding upon the surety. The claim of the plaintiff in error is that it could only have been executed by the principal by signing its corporate name at the foot of the bond. This is not true. It makes no difference in what form an obligor signs a bond, provided it appears that the purpose was to bind himself. Hinsaman v. Hinsaman, 7 Jones (N. C.) 510. Here the name of the principal, as well as that of the surety, was written in full in the body of the bond, and the seal of the principal was impressed opposite the attestation clause, between the obligatory part and the condition. At the close of the whole instrument it was signed: "Charles B. Peet, President. James R. Pitcher, Secretary." Right under these the corporate name of the plaintiff in error was signed: "By E. B. Leigh, President. L. W. Coy, Secretary,"—and the seal of the plaintiff in error is impressed opposite its signature. Each of these methods of execution is in customary use, and each is as binding as the other. That the principal followed in this case its customary method of executing sealed instruments is shown by comparison with its policy, which was executed in the same manner. It was not, like the instances cited by the plaintiff in error, a case where one signs a bond as surety, which is never signed by other parties named in the body of the bond, and therefore appears on its face to be incomplete. Here the surety cannot claim that it expected the bond to be signed by the principal after being signed by the surety; for here the bond was signed by the principal before being signed by the surety, and the surety recognized such signing as sufficient by signing right below it.

3. The exemplification of the record of the judgment in favor of Minnie Robinson against the United States Mutual Accident Association was sufficient and properly certified.

4. Although the bond upon which the action was brought was, by its terms, made to the state of Arkansas, it was required and made for the use and benefit of the beneficiaries in the policies of insur-

Digitized by Google

ance issued in that state, and any such beneficiary could maintain an action for breach of the condition of the bond. Such right of action in the beneficiary was expressly given by the act of March 26, 1887. Sand. & H. Dig. § 4133. Some of the provisions of this act were changed by the later acts of March 6, 1891, and March 24, 1893. Sand. & H. Dig. § 4124. But the provision above referred to in the earlier act was left untouched, and still remains.

5. The testimony of the witness Sanders to the effect that Charles B. Peet was the president and James R. Pitcher the secretary of the United States Mutual Accident Association, based upon their admissions of such facts in written correspondence, was incompetent; and its admission, against the objections of the plaintiff in error, was erroneous. The authority of an agent cannot be shown by proof of his admissions, and, besides, no foundation was laid to admit oral evidence of the contents of the writings, had the writings been competent. But the plaintiff in error was not prejudiced by the admission of this testimony, as the official character of Peet and Pitcher was abundantly proven by the policy of insurance, and by the recognition of their official character by the plaintiff in error in the execution with them of the bond sued upon.

6. The plaintiff below was not called upon to again establish on this trial her right to recover against the insurance company upon the policy. That right had been established by her judgment in her action against the insurance company; and such judgment against the principal upon the bond, not shown to have been collusive, was competent and sufficient evidence against the surety. In City of Lowell v. Parker, 10 Metc. (Mass.) 309, Chief Justice Shaw says:

"But it is objected that this judgment was not admissible, because the sureties were not notified, and therefore it was res inter alios. But we think this objection cannot be supported, under the circumstances of this case. When one is responsible, by force of law or by contract, for the faithful performance of the duty of another, a judgment against that other for a failure in the performance of such duty, if not collusive, is prima facie evidence in a suit against the party so responsible for that other. If it can be made to appear that such judgment was obtained by fraud or collusion, it will be wholly set aside; but otherwise it is prima facie evidence, to stand until impeached or controlled, in whole or in part, by countervailing proof."

This exposition of the law has been adopted without dissent by courts and text writers, and covers this case. Here there was no evidence tending to show collusion, or to in any way impeach such former judgment, or to disprove any of the matters determined by that judgment.

7. The court properly instructed the jury that under the evidence in the case the plaintiff below was entitled to recover from the defendant below the amount of the judgment aforesaid, which she had recovered against the United States Mutual Accident Association, including the costs and interest upon the same. This was the proper measure of the actual damages sustained by her because of the breach of the condition of said bond. There was no material error in the trial of the cause, and the judgment is affirmed.

Digitized by Google

(79 Fed. 423.)

COMMERCIAL TRAVELERS' MUT. ACC. ASS'N OF AMERICA v. FULTON et al.

(Circuit Court of Appeals, Second Circuit. February 23, 1897.)

1. APPEAL—EXCEPTIONS.
   Exceptions to instructions taken after the jury had retired will not be considered on appeal. Park Bros. & Co. v. Bushnell, 9 C. C. A. 140, 60 Fed. 583, followed.
2. INSURANCE POLICY—CONSTRUCTION.
   All ambiguities and obscurities in a policy of insurance are to be resolved against the insurer, and therefore the word "effected" in an accident policy will not, in order to relieve the insurer, be read "affected," although it be meaningless as written.
3. ACCIDENT INSURANCE—DISEASE CONTRIBUTING TO DEATH.
   Under a policy of accident insurance which provides that it shall not extend to nor cover accidental injuries or death "resulting from or caused, directly or indirectly, wholly or in part, by disease in any form," there can be no recovery for the death of the insured if he had a disease but for which death would not have resulted from the accident; and, where the insured had a diseased heart, it was error to give an instruction allowing the jury to find for the plaintiffs if they believed the accident was sufficient to cause the death of a man with a diseased heart, although insufficient to kill one with a normally healthy heart.

This case comes here upon writ of error to the circuit court, Northern district of New York. The action was brought by the plaintiffs (who are defendants in error) to recover $5,000 under a certificate of membership issued by defendant (which is plaintiff in error) to Thomas K. Fulton, and which, in effect, insured the plaintiffs, his beneficiaries, in the event of his death by accident. The jury found a verdict in favor of plaintiffs, upon which judgment was entered. The facts sufficiently appear in the opinion.

M. W. Van Auken, for plaintiff in error.

Chas. A. Talcott, for defendants in error.

Before LACOMBE and SHIPMAN, Circuit Judges.

LACOMBE, Circuit Judge. The relevant parts of the policy, which is dated November 17, 1892, are as follows:

"The Commercial Travelers' Mutual Accident Association of America, by this certificate of membership, in consideration of the membership fee and the warranties and agreements contained in his application for membership, hereby accepts Thomas K. Fulton, * * * and hereby insures him, in the following manner, subject * * * to all conditions hereinafter contained, against personal, bodily injuries affected during the continuance of membership and this insurance, through external, violent, and accidental means, to wit: (1) In the sum of $25 per week against loss of time * * * resulting from bodily injuries, effected through means as aforesaid, which shall, independently of all other causes, immediately, wholly, and continuously disable him. * * * (2) Or if such injuries alone shall immediately sever, above the wrist or ankle, one hand and foot," etc., "* * * the association will pay to the insured * * * $5,000. (3) Or if such injuries alone shall in like manner immediately sever either hand or foot," etc., "* * * the association will pay to the insured * * * $2,500. (4) Any member of this association who, during the continuance of his membership, sustains, through external, violent, and acci-

Digitized by Google

dental means, an injury, which injury alone, in the judgment of the medical examiners, causes total disability, * * * the said member shall * * * receive $2,500. (5) Or if such injuries alone shall immediately and entirely destroy one eye," etc., "* * * the association will pay * * * $1,000. (6) Or if death shall result from such injuries alone, and within three calendar months, the association will pay $5,000 to his sisters, Harriet and Anna Fulton. * * * The conditions under which this certificate is issued and accepted by the insured (member) are as follows: First. The insurance shall not extend to or cover disappearances, or injuries, whether fatal or disabling, of which there is no external, visible mark on the body of the insured; nor extend to or cover accidental injuries or death resulting from or caused directly or indirectly, wholly or in part, by hernia, fits, vertigo, somnambulism or disease in any form, or while effected thereby; nor extend to cover injuries or death resulting from or caused by gas or poison," etc.

On January 1, 1895, the insured, a man weighing from 180 to 190 pounds, while on the sidewalk, waiting for a street car, suddenly fell. From the evidence the jury were entitled to infer that his fall was caused by an accidental slip upon snow or ice, and for the purposes of this appeal it must be assumed that the fall was the result of an accident. In falling he struck upon an iron water spout which projected a few inches above the sidewalk, and which left external, visible marks upon his head and face, in the form of abrasions or bruises not supposed at the time to be of a serious character. He died from 15 to 20 minutes after the accident, and was buried without any careful examination into the cause of death. Three months after interment the body was exhumed and an autopsy made. It then appeared that at the time of the accident the deceased was affected with a diseased condition of the aortic valves and calcification of both coronary arteries. Calcification is a deposit of lime salts in the walls of the tube, making it rigid and fragile, instead of elastic, as it is in health. There was dilation of the heart and hypertrophy. It is unnecessary to go into further details, since the plaintiffs' own expert, who was present at the autopsy, testified that "the conditions which [he] found in the heart would indicate that the heart was diseased." There was much dispute upon the testimony as to what the autopsy disclosed as to the condition of the brain, but on this appeal it must be assumed that there was evidence of injury to the brain, resulting from the blows which left the marks found after his fall.

Before proceeding to discuss the points which are raised by exceptions of the plaintiff in error seasonably taken, it seems appropriate to call attention to a point of practice. Eleven of the exceptions to the charge of the judge, which have been assigned as error, and to which argument has been addressed in the brief, were not taken, as the record shows, until after the jury had retired in charge of a sworn bailiff. This practice has been expressly condemned by the supreme court in Hickory v. U. S., 151 U. S. 316, 14 Sup. Ct. 334, and by this court (Park Bros. & Co. v. Bushnell, 9 C. C. A. 140, 60 Fed. 583), for reasons which may be found therein set forth. If, as plaintiff in error suggested on the oral argument, this was by the express direction of the trial judge, who thus deprived plaintiff in error of the opportunity to take its exceptions at the proper

Digitized by Google

time, that fact should have been set forth in the record, and we might afford proper relief. But, in the absence of anything to indicate such a departure from the well-settled practice, we must assume that this case is in that respect on all fours with Park Bros. v. Bushnell, supra, and dispose of these 11 exceptions in the manner indicated in that case. Fortunately for plaintiff in error, the exceptions which were properly reserved sufficiently present the points it has argued in this court.

Inasmuch as it is conceded that Fulton was affected with a serious disease of the heart at the time of the accident, defendant contends that his beneficiaries were not entitled to recover, and that verdict should have been directed for defendant. It is insisted that the conditions of the policy were expressly designed to meet just such a case, and to avoid all controversy between medical experts as to the relative potency of external and internal conditions causing death; that it was designed to take the place of medical examinations into the physical condition of members, each member stipulating that if he was affected by a rotten heart, or Bright's disease, or an incipient cataract, or other disease which might be calculated to increase his risk of injury, or his risk of damage from injury, he would not call upon the association for relief. The language of the condition referred to is:

> "The insurance under this contract shall not * * * extend to or cover accidental injuries or death resulting from or caused directly or indirectly, wholly or in part, by hernia, fits, vertigo, somnambulism or disease in any form, or while effected thereby."

The sentence is ungrammatical, and the last clause meaningless, as may be seen from the following analysis:

Insurance under this contract shall not cover

A. Accidental injuries or death	resulting from or caused, directly or indirectly, wholly or in part, by 1. Hernia. 2. Fits. 3. Vertigo. 4. Somnambulism. 5. Disease in any form.
B. Accidental injuries or death	while effected by 1. Hernia. 2. Fits. 3. Vertigo. 4. Somnambulism. 5. Disease in any form.

If the word "while" were given the meaning it sometimes has, viz. "when," the word "effected" would qualify the antecedent "accidental injuries or death," and the whole sentence would be grammatically accurate; but, if so construed, clause B would mean no more than clause A. To give to the clause the meaning for which defendant contends, it would be necessary to change the word "effected" to another word, with a different meaning, viz. "affected." It may very well be that it was the intention of the defendant to print the latter word in its forms of policy, but that does not change the situation. This is an action at law upon the contract as it was

Digitized by Google

made and executed, not a suit in equity to reform the contract, fortified with evidence appropriate to such a prayer for relief, and we must take the contract as we find it. Upon familiar principles, all its ambiguities and obscurities are to be resolved against the draftsman.

Although no meaning more favorable to the defendant can be spelled out of the last clause, the residue of the sentence contains a perfectly plain, unambiguous, and explicit statement, in harmony with all the other provisions of the policy. The insurer is not to respond when death is caused directly or indirectly by disease, nor when it is caused in part by disease. In other words, when the accident (such as a fall) which causes the death was itself caused by some disease, or when an existing disease co-operates with the accidental injuries to cause the death, or when the accidental injuries are of such a character that they would not cause the death of a person in normal health, but do kill the insured, because an existing disease, unknown to the insurer, unknown perhaps to the insured, has put him into such an abnormal condition that he is unable to resist the effects of the injuries as he would if in normal health,—in none of these cases is the insurer liable. The true construction of a clause providing that a policy shall not cover "death or disability resulting wholly or in part, directly or indirectly * * * from disease or bodily infirmity," is found admirably expressed in the opinion of the circuit court of appeals for the Eighth circuit in Association v. Shryock, 20 C. C. A. 5, 73 Fed. 775:

"If he sustained an accident, but at the time it occurred he was suffering from a pre-existing disease or bodily infirmity, and if the accident would not have caused the death if he had not been affected with the disease or infirmity, but he died because the accident aggravated the effects of the disease, or the disease aggravated the effects of the accident, the express contract was that the association should not be liable for the amount of the insurance. The death in such a case would not be the result of the accident alone, but it would be caused partly by the disease and partly by the accident."

Much has been said in argument upon the question of proximate and remote cause. It may be well to refer to some of the cases cited on the briefs, in order the better to appreciate, when the evidence in this record is discussed, that such question plays no part here: In Insurance Co. v. Melick (also in the court of appeals for the Eighth circuit) 12 C. C. A. 544, 65 Fed. 178, the condition excluded "death * * * resulting wholly or partly * * * from disease or bodily infirmity, * * * intentional injuries (inflicted by the insured or any other person)." The insured accidentally shot himself in the foot. The wound resulted in tetanus or lockjaw, and on the eighteenth day after the accident he was found dead, with his throat cut and a scalpel in his hand; having also been in the embrace of tetanic spasm, causing intense agony, at the time of his death; the evidence leaving it an open question whether the spasm or the cut was the immediate cause of death. It was left to the jury to determine whether the accident was the approximate cause of the death. It will be noted that no independent disease had contributed in any way to the catastrophe. The spasm or the

Digitized by Google

delirious impulse to end his tortures were both themselves caused solely by the accident. In Freeman v. Association, 156 Mass. 351, 30 N. E. 1013, the policy covered where "accidental injuries alone * * * shall have occasioned death," and did "not extend to any case * * * in which death or disability occurs in consequence of disease, * * * nor to any case except where the injury is the proximate cause of the disability or death." It was proved that the insured, Freeman, died of peritonitis localized in the region of the liver, and the evidence tended to show that it was induced by a fall. There was also evidence indicating that he had previously had peritonitis in the same part, and that the previous disease had produced effects which rendered him liable to a recurrence of it; but there was no evidence to show that he had peritonitis or any other disease at the time of the fall. The court gives a careful and elaborate definition and discussion of "proximate cause" within the meaning of the policy. That definition and discussion, however, were in criticism and disapproval of a contention of the defendant that the jury should have been charged that defendant was not liable in case of death from disease, even if the disease is caused by an accident,—a very different hypothesis from the one at bar, where there is no suggestion that the disease which defendant insists cooperated to produce death was itself caused by the accident. When the Massachusetts court, however, deals with the other branch of the case, it approves of the charge under review, which instructed the jury as follows:

"The question as to whether peritonitis, if that caused his death, is to be deemed a disease, within the meaning of this policy, and the proximate cause of death, within the meaning of this policy, so far as to prevent a recovery, depends upon the question whether or not, before the time of the fall and at the time of the fall, he had then the disease,—was then suffering with the disease. If he was, then, in the sense of the policy, although aggravated and made fatal by the fall, he cannot recover."

And the charge in the Freeman Case then proceeds to deal with a case where the insured had had peritonitis, but had recovered, leaving him predisposed to contract such disease again, but not actually affected with the disease at the time of the accident. In the case now under review there is no dispute but what the insured was actually affected with disease prior to and at the time of the accident. The medical witnesses called for the defendant testified that in their opinion the injuries to the head were not fatal in their tendency, nor sufficient to cause death. On the other hand, plaintiffs' experts, or, rather, one of them, ascribed death to a hemorrhage of the brain caused by a blow on the head; the witness, on cross-examination, stating that in his opinion the injuries, as they were described by those who conducted the autopsy, might be sufficient to cause death; adding that he thought it "entirely possible that a healthy man would be killed by falling down and striking in the places where this man, as I am told, was struck." There was therefore a conflict of evidence as to whether the injuries to the head—injuries caused by the accident—were or were not such as to cause Fulton's death.

Digitized by Google

Defendant contends that the jury were not fully and fairly instructed as to the consideration to be given by them to the conceded heart disease, in view of the testimony of the medical experts. For the purposes of this appeal, the evidence of defendant's experts may be disregarded, and defendant's contention considered in the light of the concessions made by plaintiffs' experts. Dr. Rigg took part in the autopsy as a representative of plaintiffs. He testified that he found "a diseased condition of the aortic valves, and calcification of the coronary arteries, * * * one slightly; * * * that there was a very small amount of dilation of the heart, * * * and hypertrophy; that the conditions which he found in the heart would indicate that the heart was diseased,"—and added:

"I should certainly regard the diseased condition of the heart as the secondary cause of this man's death, but not the determining cause. * * * It would not take as much of a shock to cause death in a man whose heart was diseased as it would in the case of a man whose heart was in a healthy condition. * * * If Mr. Fulton's had been in a perfectly healthy condition, I think he would have been better able to have withstood this shock. That is the reason that leads me to say that the unhealthy condition of the heart was the secondary cause. * * * I don't think that the fall produced any change in the heart, other than withdrawing of the nerve force. As a result of that the circulation would be arrested. Because of the diseased condition of the heart, it would be arrested the more easily. The heart would be more easily affected. * * * If this man's heart had been perfectly healthy, so far as I can determine, he might have withstood this fall."

And upon recross-examination he said:

"To sum this up, I say, in my judgment, the primary cause of his death was the fall, and the secondary cause was the diseased condition of his heart."

The other medical expert called by plaintiffs, Dr. Ford, had never seen the deceased. He testified to opinions based upon the facts testified to by the other witnesses. He said:

"I think that the injuries in this case might be sufficient to cause death. I am not positive it is sufficient. I would say that it is my opinion that death came from these injuries. * * * And I should be very positive indeed. In coming to this conclusion, I consider the condition of the heart as found in the autopsy. My idea is that death was due to some lesion in the brain produced by the blow. I hadn't said anything about the heart. I will if you want me to. I think the man was much more likely to have died from a shock of that sort, because of his weakened circulation. And that weakened circulation enabled this violence to accomplish greater results than if the condition of the heart had not been a weakened one. I should say this condition of the heart made it more easy to kill the man. That is quite a different statement than that the condition of the heart assisted in causing death, or contributed to it. I should say that a perfectly sound man, with a normal, healthy heart, would have possibly been killed by the blows such as there is evidence of in this autopsy. I do not say that every man would have been. * * * I take into consideration, in determining the cause of this man's death, the condition of the heart. The condition of this man's heart was not the primary cause of his death, according to the account that has been read to me. I did not give an opinion that the sole cause of death was this blow. I have not been asked what other causes of death there might have been. I have not heard of any. I have not thought about it. There might have been a thousand other causes. I have heard of heart disease in connection with this case. I would not tell the jury that this organic disease of this man's

Digitized by Google

heart had nothing to do with his death. I have not said so. It did have something to do with it. It made the method of killing easier. In that sense, I do not think it was one of the causes. I do not think that was the cause of death. I think he was killed easier because he had this weakened circulation than if he had been perfectly sound. Of course, I cannot say that, if he had not had this fall, that he would not have died at some time with heart disease. The general condition of the heart entered into the effect of death. Not as its causation, however, but as to the result of an injury [sic in record]. I don't think it is what is called a 'secondary cause.' That is the cause of the man's weakness, and his want of resistance, and, perhaps, the cause of his slipping up. He might have slipped more easily than if he was twenty years younger, or more healthy, but it was not the cause of death. My idea is that the immediate cause of death was this shock. If his condition had been perfectly healthy, that shock might not necessarily have caused death. In that sense, the condition of the heart was not a secondary cause. It was a condition which made him more easy to succumb to an injury, but it could not have caused the injury. I think the injury would have caused the death. This made him less able to resist the shock of the blow or injury, but it did not cause the injury, it did not form the initiative. The blow was the initiative, more or less, and, on account of the heart as it was, this blow had this effect. I do not think you can call it a 'cause' either second, third, or fourth. Without that condition the blow might have and it might not have caused."

It is, to say the least, a somewhat doubtful question whether, in this state of the proof, it was proper to send the case to the jury. Disjointed phrases may be pieced together so as apparently to sustain the proposition that Fulton was killed by the blow alone, without the efficient co-operation of any other cause. It is, of course, easy to conceive of an accidental injury so manifestly destructive of life that the diseased condition of the individual would contribute in no wise to the catastrophe. But an examination of the extended quotations supra, and of the rest of the testimony, seems to indicate that what the experts meant was what the last witness has expressed, namely, that they reject the disease as a "cause" because it did not form the initiative, but that none of them are willing to assert, even as an opinion, that the heart disease had nothing to do with the death, while all concede that it made an injury, from which an individual in normal health might stand a fair chance of recovery, necessarily fatal. However, it is not now necessary to decide this question.

At the close of the charge defendant asked the court to instruct the jury:

"That if the condition of the deceased's heart contributed to his death, as plaintiff's witness Dr. Rigg testified, plaintiff cannot recover."

To this the court replied:

"I think I will charge that, however, with the qualification, as I have already said to the jury, that if the jury find that this blow was sufficient to cause the death of a man of his weight, age, and condition at that time, that their verdict may be for the plaintiffs, even though his condition at the time of the death might have made it more difficult for him to rally from the effects of this blow than a perfectly healthy man."

Exception was duly reserved. As qualified, this instruction, standing alone, allows the jury to find for the plaintiffs if they believe the blow was sufficient to cause the death of a man with a diseased

Digitized by Google

heart (which was deceased's condition), although insufficient to kill one with a normally healthy heart, which is manifestly an erroneous instruction. The court had just charged, at defendant's request, that there could be no recovery "if the fall was caused by disease" or "if disease was a secondary cause of death," or "if disease was one of the causes of death," or "if disease contributed to his death." The next request might well have been refused on the ground that the subject of contributory cause had been sufficiently covered, and defendant contends with some force that the jury might fairly understand that the qualification added to it was applicable to the last four requests. Moreover, coming as the very last statement of the court to the jury, it was calculated to leave a stronger impress upon their minds than if it had formed a single sentence in the colloquial charge. An appellate court, however, should not be astute to reverse because, in the hurry of a trial, some single phrase of voluminous instructions to the jury may contain a misstatement as to the law of the case, especially when it is uttered in ruling upon a dozen requests, which appear to have been presented to the judge only after the colloquim, instead of before he began to instruct, as they should have been. In such a case it must be collated with the rest of the charge, in order to see if, taken as a whole, the instructions may have been calculated to mislead. The very qualification complained of is itself qualified with the phrase, "as I have already said to the jury," which expressly referred them to the more detailed discussion of the subject which they had already listened to. If, therefore, when the charge is examined as a whole, it appears that the jury, if attentive, must have understood that there could be no verdict for the plaintiffs if the diseased condition of the heart directly or indirectly contributed to cause the death of Fulton; no recovery if, by reason of Fulton's diseased condition, the blow was fatal to him, although a normally healthy man would in all probability have rallied from its effects,—then the verdict should not be set aside, although the phrasing of this particular qualification be erroneous. The charge, as a whole, however, did not, in our opinion, explicitly direct the attention of the jury to the controlling issue in the case. The defendant requested the court to charge that the burden of proof was upon the plaintiffs to show "that the injuries resulting from the fall alone caused death." To this the court replied: "I do charge that. It must be the proximate cause of death." This is the keynote of the whole charge, and, taken as a whole, it evidently directed the attention of the jury to deciding the question what was the "proximate cause" of death. The natural result would be that, having reached the conclusion that the injuries were the "proximate cause," they would neglect to inquire whether there was any other cause of death, not proximate, but efficiently contributing. As was said before, under this policy, and upon the facts in proof, there was no question of proximate or remote cause, but only whether there were two co-operating causes, or only a sole cause. There are undoubtedly many passages in the charge which plainly indicate the cor-

Digitized by Google

rect rule that plaintiffs could not recover unless the jury were satisfied that the accidental injury was sufficient of itself to cause death to a healthy man; but upon the other hypothesis, which the evidence warranted, namely, that the fall produced a shock which called for responsive action from the heart, which it was too weak to give efficiently, the general effect of the charge failed, in our opinion, sufficiently to impress upon the jury that, if the disease thus contributed to cause death, plaintiffs could not recover. In other words, having reached the conclusion that the injury was the "active, efficient, procuring cause"; that the blow was, as plaintiffs' expert said, "the initiative,"—the jury, under the instructions given them, would be likely to trouble themselves with no further question as to any subsidiary cause. It will be sufficient to cite two passages from the charge. After setting forth the issues and the contract, the court began its statement of the "law as applicable to such a condition of affairs as exists here" by reading from the opinion in Freeman v. Association, supra, which he informed the jury was "a clear statement of the law." The passage thus read and given to the jury in this case as the headlight to their deliberation is as follows:

"*The principal question* * * * is, what kind of cause is to be deemed *proximate*, within the meaning of the policy? *Where different forces* and conditions *concur* in producing a result, it is often difficult to determine which is properly to be *considered the cause*, and in dealing with such cases the maxim, '*Causa proxima non remota spectatur*,' is applied. But this does not mean that the cause or condition which is nearest in time or space to the result is necessarily to be deemed the approximate cause. It means that *the law will not go further back* in the line of causation than to find the *active, efficient, procuring cause*, of which the event under consideration is a natural and probable consequence in view of the existing circumstances and conditions. *The law does not consider the cause or causes*, beyond seeking the *efficient, predominant cause*, which, following it no further than those consequences that might have been anticipated as not unlikely to result from it, has produced the effect. An injury which might naturally *produce death in a person of a certain* temperament or *state of health* is the cause of his death, if he dies by reason of it, *even if he would not have died if his* temperament or *previous health had been different*; and this is so as well when death comes through the medium of a disease directly induced by the injury as when the injury immediately interrupts the vital processes."

The italicized portions illustrate the criticism above expressed. Subsequently in the charge, making a more specific application to the facts in this case, the court instructed the jury as follows:

"The accident must be the *actual, immediate, and proximate cause* of the death; and, if the proof convinces you that the accident caused Fulton's death; then the law is that the *policy would not be avoided, even though it be possible that the man was suffering from some other disease, which, to a certain extent, might have rendered his system less able to throw off the effects of the blow than if he had been a younger and more healthy man.*"

Neither of these passages from the charge are covered by exceptions taken at the proper time, but the qualification to the request above quoted is thus covered. Inasmuch as that qualification is manifestly erroneous, and the passages last above quoted show that the charge as a whole was not such as to warrant a holding

Digitized by Google

that the erroneous qualification could have worked no injury to the defendant, the judgment must be reversed and the case remanded for a new trial.

(79 Fed. 432.)

NATIONAL MACH. CO. v. WHEELER & WILSON MANUF'G CO.

(Circuit Court of Appeals, Second Circuit. February 23, 1897.)

1. PATENTS—CONSTRUCTION OF CLAIMS—BUTTONHOLE MACHINES.
   In the Osterhout patent, No. 447,791, for an improvement in machines for cutting and stitching buttonholes, claims 21 and 22 are only sustainable by reading into them the jogging or sidewise movement of the stitch mechanism for the purpose of operating the cutter; and neither these claims nor claims 1, 2, 4, 5, 7, 15, and 28 are infringed by a machine made in accordance with the Tebbetts & Doggett patent, No. 438,655, in which the cutter is operated by other means, without any use of the jogging movement. 72 Fed. 185, reversed.

2. SAME—INTERFERENCE PROCEEDINGS—ACQUIESCENCE.
   Failure of a party to move for dissolution of an interference in the patent office is not an acquiescence in the ruling that the inventions, as limited by the prior art there shown, were identical and patentable. While the decision on interference may be res judicata as to priority, it does not preclude either party from raising other questions.

Appeals from the Circuit Court of the United States for the Southern District of New York.

These are cross appeals from a decree of the circuit court, Southern district of New York, which sustained the validity of United States patent No. 447,791, granted March 10, 1891, to James B. Osterhout, and found infringement of two claims and noninfringement of seven others. The patent is for a machine for cutting and stitching button holes. The specification states that: "One general object of this invention is to provide buttonhole sewing machines with practically successful cutting mechanisms, which shall automatically cut a buttonhole only when the machine is stitching at a predetermined portion, part, or point in the periphery of the buttonhole."

The claims in question are as follows:

"(1) In a buttonhole sewing machine, the combination, with its stitch-forming and work-moving mechanism, of a work-cutter and its carrier normally elevated; a depressor, which ordinarily does not depress the cutter-carrier and cutter; a cutter-controller connected to and moving with the said work-moving mechanism; and connections between the said cutter-controller, cutter-carrier, and depressor, whereby the latter is temporarily caused to depress the cutter-carrier and cutter,—substantially as set forth.

"(2) In a buttonhole sewing machine, the combination, with its stitch-forming and work-moving mechanism, of a work-cutter and its carrier normally elevated; a depressor which is operated by the needle-actuating mechanism of the sewing machine, and which ordinarily does not depress the cutter-carrier and cutter; a cutter-controller connected to and moving with the said work-moving mechanism; and connections between the said cutter-controller, cutter-carrier, and depressor, whereby the latter is temporarily caused to depress the cutter-carrier and cutter,—substantially as set forth."

Digitized by Google

"(4) In a buttonhole sewing machine, the combination, with its stitch-forming mechanism, work-clamp, and mechanism, including a rotary feed device for operating the work-clamp, of a work-cutter and its carrier normally elevated; a depressor which ordinarily does not depress the cutter-carrier and cutter; a cutter-controller connected to and rotating with the said rotary feed device; and connections between the said cutter-controller, cutter-carrier, and depressor, whereby the said depressor is temporarily caused to depress the cutter-carrier and cutter,—substantially as set forth.

"(5) In a buttonhole sewing machine, the combination, with a stitch-forming mechanism, a work-clamp and mechanism, including a rotary feed device for operating the work-clamp, of a work-cutter and its carrier normally elevated; a depressor operated by the needle-actuating mechanism of the sewing machine; a cutter-controller connected to and rotating with the said rotary feed device; and connections between the said cutter-controller, cutter-carrier, and depressor, whereby the cutter-carrier and cutter are temporarily depressed by the said depressor,—substantially as set forth."

"(7) In a buttonhole sewing machine, the combination, with a stitch-forming mechanism, a work-clamp, and mechanism for operating the work-clamp, of a depressor operated by the actuating mechanism of the sewing machine; a work-cutter, its carrier, means to elevate the cutter-carrier, and means to support it when elevated and disconnected from said depressor; a cutter-controller connected to and moving with the mechanism operating the work-clamp; and connections between the said cutter-controller, cutter-carrier, and depressor, whereby the cutter-carrier is temporarily connected with and depressed by the said depressor, and is thereupon elevated and disconnected from the depressor,—substantially as described."

"(15) In a buttonhole sewing machine, the combination, with a stitch-forming mechanism, a work-clamp, and mechanism for operating the work-clamp, of a cutter-carrier normally elevated, and an attached cutter of suitable length to cut a buttonhole at one insertion; a depressor, operated by actuating mechanism of the sewing machine; a cutter-controller connected to and moving with the mechanism for operating the work-clamp; and connections between the said cutter-controller, cutter-carrier, and depressor, the same being constructed and arranged so as to cause the cutter-carrier and cutter to be depressed by the said depressor to cut a buttonhole when the sewing machine is stitching at or near one end part of one side of the buttonhole,—substantially as set forth."

"(21) In a machine for stitching buttonholes, the combination, with a stitch-forming mechanism, a work-clamp, and mechanism for operating the latter, of a cutter, a cutter-carrier or bar, a depressor operated by the needle-bar actuating mechanism, a cam or device rotating in unison with the clamp-operating cam or disk, and connections between the said rotating cam or device and depressor, whereby the cutter is thrown into action.

"(22) In a machine for stitching buttonholes, the combination, with a stitch-forming mechanism, a work-clamp, and mechanism for operating the latter, of a cutter-bar, sliding vertically in the head of the machine, and entirely disconnected from the needle-bar thereof; a cutter of suitable length to cut an entire buttonhole at a single stroke; a slotted throat-plate, through which the said cutter can descend; a depressor operated by the needle-bar actuating mechanism, to cause a descent of the cutter-bar and cutter as a buttonhole is being completed; a cam or device rotating in unison with the feed cam or disk for the clamp; and connections between the said rotating cam or device and depressor, whereby the latter is thrown into action to operate the cutter."

"(28) The combination, with a buttonhole sewing machine, of a cutter, a cutter-carrier, a cam from which motion is transmitted to the cutter-carrier to depress the cutter, and mechanism whereby the depression of the cutter from the cam will be produced but once, and after the stitching of the greater part of a button-hole, substantially as specified."

The circuit court held that defendant's machine infringed claims 21 and 22, but did not infringe claims 1, 2, 4, 5, 7, 15, and 28.

Digitized by Google

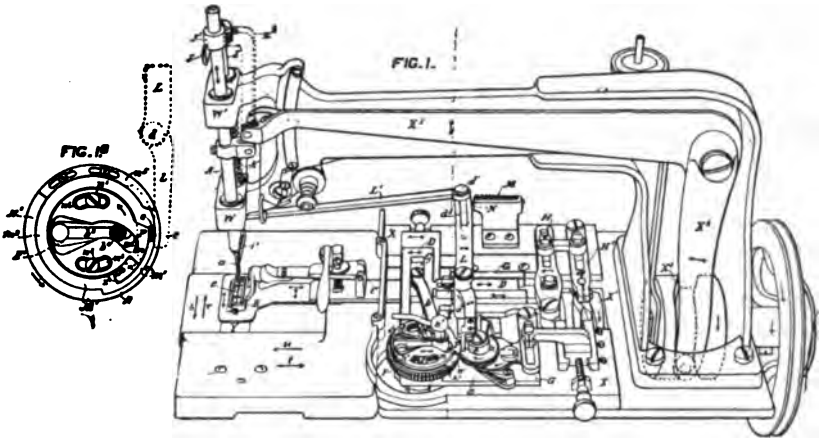

Osterhout Patent.

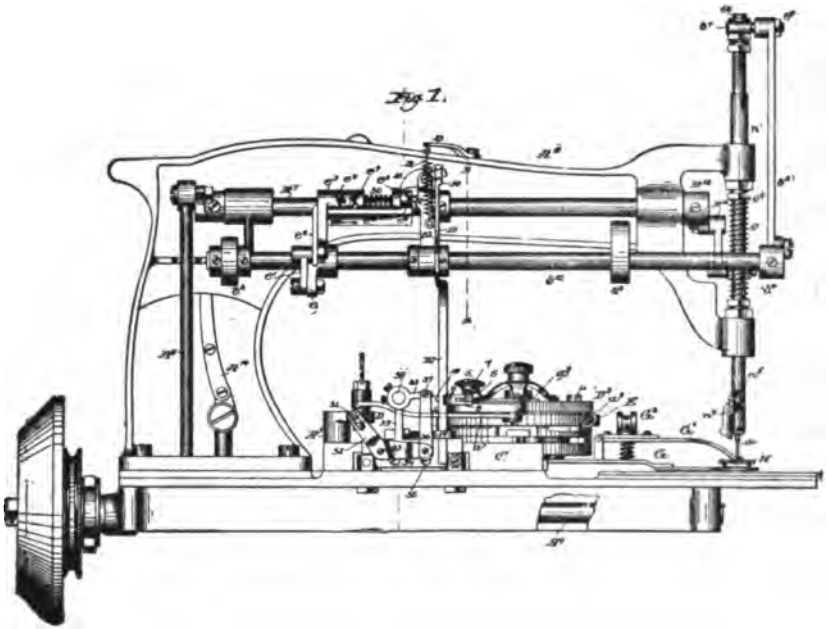

Defendant's Machine.

Digitized by Google

Edwin H. Brown, for complainant.
James H. Lange and Livingston Gifford, for defendant.

Before WALLACE, LACOMBE, and SHIPMAN, Circuit Judges.

LACOMBE, Circuit Judge (after stating the facts). Machines of this general character comprise work-moving mechanism, stitching mechanism, and cutting mechanism. With the cutting mechanism only is this suit concerned. The threads which surround and reenforce the sides of a buttonhole extend from the edge of the buttonhole backward into the cloth, being inserted in the cloth by a succession of alternate stitches, known as "edge stitch" and "depth stitch." The machines that make these stitches operate in one of two ways: either the cloth feeds forward lengthwise of the buttonhole, without any sidewise to and fro motion, and the needle is itself jogged sidewise to or fro after each stitch, or else the needle reciprocates vertically without any lateral motion, and the clamp which holds the work is given the jogging motion, so that the needle will stitch alternately "edge" and "depth." The patent in suit is concerned with this latter class of machines, and it provides for cutting mechanism whereby the buttonhole may be cut while it is being stitched. The work clamp which holds the cloth has two motions; a forward motion, or forward feed, which pushes it along in the direction of the length of the buttonhole without retrogression; and a to and fro or jogging motion at right angles to the length of the buttonhole. The succession of movements in forming the stitches are these, a starting point being taken when the work-clamp is jogged out so that the edge-stitch line is under the needle: (1) The needle descends, and then (2) it ascends, making an edge stitch. (3) The work-clamp jogs in, bringing the depth-stitch line under the needle. (4) The needle descends, and then (5) it ascends, making a depth-stitch. (6) The work-clamp jogs out, bringing the edge-stitch line under the needle, and (7) either simultaneously with 6, or afterwards, and before 8, the work-clamp moves forward so far as may be necessary to secure the predetermined distance between the pair of stitches already formed and the next pair. (8) The needle descends, and then (9) it ascends, forming another edge-stitch. And so on in the order set forth. The cutter is fixed to a cutter-carrier, which reciprocates vertically as the needle does, when thrown into engagement with the needle-carrier. When not thus operated upon by the depressor of the needle-carrier, it is inoperative. The cutter may be of width equal to the length of the buttonhole, in which case it will be necessary only to provide means for making it descend once; or it may be narrow, in which case successive plunges must be provided for. Of course, it does not descend in the same plane as that which contains either line of edge stitches, and therefore not in the same plane as the needle. The plane of its operations lies between the two lines of edge-stitches. And it is manifest that whether it be a broad knife or a narrow one, and on whichever side of the needle it plays, it must be so arranged that it will descend only in its own proper plane. If, for instance, it is in such proper plane when the needle

Digitized by Google

is in edge-stitch position, it will be out of its proper plane when the needle is in depth-stitch position; and if it descends there it will cut the cloth in such wise as to ruin the buttonhole. And the patentee states in his specification that he so arranges and adjusts "the cutter and its carrier that they will be depressed to cut the middle line or slit of the buttonhole when the needle descends in or nearly in that line as in making the edge-stitches, or when the needle penetrates the work at a distance from that line, as in making the depth-stitches." The combination of parts by which this is accomplished is, briefly stated, thus: A cutter-bar, sliding in guides at one side of the needle-bar, and normally detached from other parts, is adapted to be thrown into engagement with a depressor on the needle-carrier, which, when the needle descends, will carry down the cutter-carrier with it. When the needle-carrier ascends, the cutter-carrier is, by means of a spring or similar device, elevated with it, and thrown out of engagement with the depressor. Engagement is effected by means of connections between the cutter-bar and a so-called "cutter-controller," located on the work-clamp mechanism. The following excerpt from the opinion below correctly describes this part of the apparatus:

"P of the patent drawings represents the cutter-controller, a laterally-projecting finger attached by means of screws to the feed-wheel disk, F, arranged to be operated by means of teeth in said wheel engaging a ratchet or pawl, motion to which is imparted by the motion of the main shaft of the machine. [This disk revolves, without retrogression, in the direction of the hands of a watch, and it moves synchromously with the forward feed of the work-clamp. When that forward feed ceases temporarily to allow the needle to make an edge and a depth stitch, the disk for a like period suspends its revolution.] As this disk revolves, it brings the projecting point of the cutter-controller into engagement with a vertical finger on the arm, L, of a lever, which so moves the arm, L^1, of said lever, acting by means of hinges upon the vertical cutter-carrier, I, as to cause the cutter-bar to slightly rotate, and to bring the clutch, J, on the cutter-carrier, and the clutch, J^1, on the needle carrier, A, into engagement. Thereupon the downward movement of the needle-arm depresses the cutter-carrier, and the cutter passes through the fabric. Upon the upward movement of the needle-carrier, a spring causes the clutches to be disengaged, and another spring, K, upon the cutter-carrier, elevates the cutter."

Moreover, as this rotary disk, with its projecting finger, P, is mounted on the work-clamp mechanism, it has, besides its rotary motion, the same to and fro or jogging motion which the work-clamp has.

The patent is long and complicated. It covers 14 pages, contains 30 claims, and is accompanied with 59 drawings. The evidence is voluminous, and the judge who heard the cause in the circuit court has elaborately discussed the patent, the defendant's machine, and the prior state of the art. It will not be necessary here to go over all the ground so carefully covered. In most of his conclusions as to the prior art, the invention of Osterhout, and the relative dates of other inventions, we concur. The case has been much simplified here by concessions made upon the argument. The defendant concedes that invention was exercised on the part of Osterhout in his solution of the problem how to connect a cutter mechanism with the feed-wheel so that it would be automatically

Digitized by Google

operated during a portion only of the stitching period, and so operated as to cut when making the edge-stitch, and not to cut when making the depth-stitch, in a buttonhole sewing machine of the type in which the cloth clamp has a jogging movement to make the edge and depth stitch, and a cycle of feed movement to lay the stitches about the buttonhole. The complainant has also upon the argument made concessions as to his utilization of the jogging movement to effect this result, which will be referred to in more detail after stating the conclusion arrived at in the circuit court, in the following quotations: "The device of defendant is so constructed that it is not dependent upon the jogging motion of the feed-wheel mechanism for the determination of the number of strokes of the cutter." "The complainant's device is thus dependent." Therefore it is "necessary to limit certain claims of the patent [1, 2, 4, 5, 7, 15, and 28] to a cutter-controller which determines the duration of the cutting period." "Claims 21 and 22, however, cover the finger device used as a starter, and nothing more." "The original application covered a construction whereby the cutter might be put in engagement independent of the jogging motion." "The original application described an operative device actuated by a cam working in harmony with the progressing movement [i. e. the feed-disk rotary movement] of the work-carrier, and not necessarily limited to a construction dependent upon the combined rotary and jogging motion for causing a depression." "Claims 21 and 22 are not limited to a construction moving upon the clamp-feed mechanism, or located on the rotary feed-wheel, * * * but cover broadly a construction actuated by a cam or device rotating in unison with the clamp-operating cam or disk for throwing the cutter or depressor into action." "Inasmuch as the specification describes, and claims 21 and 23 broadly cover, such combination used as a starter, and nothing more, I think these claims are infringed by defendant," which "uses the cutter-controller as a starter." It is manifest that the circuit court was of the opinion that claims 21 and 22 covered a subcombination of the general combinations covered by the other claims, and that complainant's specifications disclosed an embodiment of such subcombination which would be operative as a starter without the co-operation of any jogging movement. The specifications and drawings describe not only a primary type of machine, but also modified forms of the same. Two of these are shown in Fig. 7,—one in solid, the other in dotted, lines,—the latter being referred to in the record as illustrative machine C. Of this complainant's expert testified: "The lever, L, may have the whole of its rocking motion imparted to it by the rotary movement of the cutter-controller." Of still another form, shown in Fig. 23, the same witness said: "[It shows] a cutter-controller performing its controlling function solely by its rotary motion." No doubt this evidence was in the mind of the court when the above-quoted conclusion was expressed. A large part of the expert testimony is concerned with this question of the extent to which the jogging motion imparted by the work-clamp enters into the various devices of the patent, and the briefs are filled with quotations from

Digitized by Google

the patent itself, and from the file wrapper and contents, which are believed to support one or other contention. All this may be eliminated from this opinion in view of complainant's concessions upon the argument. In the primary form of machine, if the work-clamp is jogged out, the rotary feed disk may be revolved indefinitely, and the finger or controller, P, will not come into engagement with the lever which starts connection between cutter and depressor. The jogging movement is essential to bring it into such engagement. Engagement and consequent starting is impossible until the work-clamp jogs in carrying the feed disk and finger, P, with it. This the complainant now concedes. In the form shown in Fig. 7, dotted line, the controller jogs, and this jog of the controller is necessary to bring it into position for operating upon the adjacent lever, by which the cutter-bar is shifted into engagement with the depressor. After the cutting has been done, the jogging movement of the controller moves it away from the lever, so that it may pass by the lever. This, too, the complainant now concedes. In the form shown in Fig. 23 the controller itself has no jogging motion, but the mechanism which effects the connection with the cutter-carrier is more complex than in the other forms. The fact is that the projecting finger, P, shifts the part g^2 into position to be operated upon by a projection, g^3, on the lever, H, which has a jogging movement, and that the jogging movement of this lever completes the movement of the cutter-carrier necessary for engaging the latter with the depressor. The jogging of this lever in the other direction permits the cutter-carrier to be released by the depressor. This also is now conceded by the complainant. Here the controller is really a compound one, to whose efficient action jogging motion is essential. As to the general form of Osterhout's machine as shown in Fig. 2, complainant also concedes that the jogging movement would be necessary for disengaging the parts if a multiple cutter was used; but insists that this would not be so when a single-stroke cutter is employed. It is unnecessary, so far as claims 21 and 22 are concerned, to review the facts or the arguments by which defendant controverts this last proposition. The above concessions, which cover the starting of the cutter in each form of machine, are sufficient. Certainly it is essential to an automatic cutting device embodied in a sewing machine that it shall at least begin to cut. That function is quite as important as it is that it should cease cutting at some appropriate time. In view of these concessions, it is a sound contention of defendant that Osterhout, so far as this record shows, "never invented any cutter mechanism except one having a controller, the fulfillment of whose function necessarily depended upon the jogging movement of some part of the work-moving mechanism; that he never illustrated or described any other cutter mechanism; and that he therefore failed to show how any cutter mechanism could be operated otherwise than through the jogging of some part in the work-moving mechanism."

The next question is whether the jogging motion is to be considered a part of these several claims. In some of them, where the

Digitized by Google

cutter-controller is described as "connected to and moving with the said work-moving mechanism," the language of the claim plainly includes the jogging motion, for when the work-moving mechanism has a jogging motion whatever "moves with it" has the same. But in others, such as claim 21, where the controller is described as "a cam * * * rotating in unison with the * * * disk," the language does not specifically include the jogging motion. But is it any the less a part of the claim? The specifications point out methods whereby the "intermittent to and fro movements" may be availed of to insure cutting at the proper time and in the proper place. "To cause the cutter-carrier," says the patentee, "to be engaged with the needle-carrier, and depressed by it, to cut the work at one descent of the needle-carrier, and to be not engaged with the needle-carrier, nor thus depressed by it, at its next descent, or to cause the cutter-carrier to be engaged with the needle-carrier, and depressed by it to cut the work only when the work-carrier is at one end only of its momentary to and fro movement (what I have called the 'zig-zag movement'), I suitably connect the clutch for temporarily engaging the cutter-carrier with the needle-carrier with a suitable part of the mechanism of the sewing machine, such as the part B, C, D, F, G, H, or H^1, which has a movement in one direction, * * * at the momentary movement of the work carrier in one lateral direction, and which has a movement in the opposite direction at * * * the next lateral momentary movement of the work-carrier in the reversed direction." Without making use of this lateral movement or jog, the subcombination of claims 21 and 22, and, indeed, the combination of each of the claims, would remain inoperative. If it were inoperative, it would be without utility, and therefore unpatentable. The claims in question, therefore, can only be sustained by reading into them the jogging motion, without which the combination set forth in the claims will perform no function.

The only question then remaining in the case is whether defendant's machine infringes. Defendant starts engagement by means of a projecting finger on the rotary feed-disk, which engages with a finger on the connecting lever, which is mounted on a tubular rock-shaft, and which moves the cutter-bar into proper position to begin to cut; but the use of a finger or trip on the feed-wheel to start other mechanism was old in the art. By reference to the statement supra as to sequence of movements, it will be observed that we have a forward move, followed by a jog in and by a jog out, and then another forward movement. There are thus two jog movements to one forward movement, and the three movements of each group come always in the same order. The machine being arranged so that the jog immediately succeeding a forward move leaves the work-clamp in proper position for the descent of the needle, the trip or finger may be located anywhere upon the periphery of the feed-disk, because, wherever placed, it can only start the cutter at a time when the work is in proper position to be cut. The defendant's machine is a single plunger, using a broad knife, and it is, of course, necessary that, having once descended, the cut-

Digitized by Google

ter shall not descend again. It will be remembered that complainant has conceded that when his machine is arranged as a multiple cutter the jogging motion is essential for disengaging the parts. We are satisfied that it is also essential for disengaging when a single cutter is used, for these reasons: The engagement between the projecting finger, P, and the lever not only rocks the cutter-carrier into proper position to be caught by the depressor, but holds it in that position as long as the engagement of P and the lever continues. Therefore, so long as such engagement continues, each descent of the needle-carrier (to which the depressor is attached) will bring down the cutter-carrier. If that engagement is left to be broken only by the forward movement of the finger, P, moving rotarily with the feed-wheel, there would be two descents of the needle and cutter, since, after each forward movement, and before the next one, there are always two jog movements. And one of these descents would take place when the work was not in proper position, and the cloth would be cut somewhere on the line of stitches. In complainant's machine it is the jog out which saves this catastrophe. The same jog which puts the work in wrong position for cutting invariably puts the projecting finger in such position that the engagement with the lever which sets or keeps the cutter in action becomes impossible. In the machine of the patent, therefore, the jogging motion is essential to both engagement and disengagement. In defendant's machine, however, it is utilized for neither. As the circuit court found, defendant has "demonstrated that its machine did not use jogging motion at all in connection with the action of the cutter-operating mechanism, and only used the rotary motion to start the cutter device by a pin, and did not depend on any contact surface to determine the cutting operation." The manner in which defendant starts its cutter devices has already been shown. It stops their action as follows: Engagement of the pin or finger on the feed-disk with the finger on the tubular rock-shaft (which takes the place of complainant's lever connection) causes a clutch on the cutter-actuating rock-shaft to be engaged with a shoulder on the needle-actuating rock-shaft. As long as the clutch is held by this shoulder, both shafts will rock together, causing both needle and cutter to descend. The shoulder is the equivalent of complainant's depressor. And so long as the engagement of finger with finger keeps the tubular (or lever) shaft rocked so as to retain the clutch in position to be caught by the shoulder, the hold of the shoulder will not be broken by the spring, which would otherwise throw the clutch out of engagement. If the machine depended only upon the further rotary movement of the feed-disk to carry its finger out of engagement with the tubular shaft finger, it would be useless, for the reason already pointed out, viz. there would be two descents, and therefore two cuts; one necessarily when the cloth was in improper position, before the forward feed motion could effect disengagement. To break engagement, defendant places on the cutter rock-shaft a snail-cam, which is so located relative to the tubular or lever shaft that, as the cutter-shaft rocks, the snail-cam depresses the tubular shaft, and breaks the engagement with its finger with the finger on the feed-disk. In consequence, the rocking motion of the cutter-shaft,

Digitized by Google

which causes the first descent, at the same time absolutely prevents a second descent by removing from engagement one of the two fingers whose engagement alone makes a descent of the cutter possible. Complainant's expert admits that it is the snail or "scroll cam on the cutter shaft that produces the disengagement of the controller, so that the disengagement cannot possibly take place before the cutter descends once, and the engagement cannot possibly continue after the cutter has descended once, no matter what the fineness or coarseness of the stitch." Having once started the connections which put the cutter mechanism into operation, the feed-disk finger has no further control over them; the cutter mechanism itself contains devices which, independent in every way of the starting pin, effect a breaking of the engagement, and a stoppage of the cutter mechanism; and which do this with no assistance in any way from the jogging movement. We concur, therefore, with the judge who heard the cause at circuit that defendant's machine does not infringe claims 1, 2, 4, 5, 7, 15, and 28, for the reason that it has not the cutter-controller, which determines engagement by the utilization of the jogging movement, but a different mechanical device, which does not at all avail of that jogging movement. And, as already pointed out, we do not think claims 21 and 22 can be differentiated on any theory that they cover the finger only as a starter operating solely by rotary feed motion, since the jogging motion is essential to start complainant's cutting devices, and defendant makes no use of such jogging movement, even as a starter.

An interference was declared in the patent office between Osterhout's application for this patent and an application of Tebbetts & Doggett. The cutter-actuating mechanism of defendant is substantially that of Tebbetts & Doggett. The issues in interference were framed on claims contained in Tebbetts & Doggett's application. They are textually the same as 21 and 22 of this patent. Default was made on the part of Tebbetts & Doggett, and upon such default priority of invention was awarded to Osterhout. It is contended by complainant that not only is the question of priority res adjudicata between the parties to the suit, but that defendant is also precluded from contesting the validity and scope of claims 21 and 22 of the patent in suit, and infringement of the claims by defendant's machine. The theory of this contention is that under the rules and practice of the patent office either party has a right to move to dissolve an interference on the ground that, in view of the state of the art, the issue framed therein could not be based upon his invention as described and claimed; that failure to move for such dissolution amounted to an acquiescence in the holding of the patent office that the inventions of the two parties as limited by the prior art there shown were identical; that they were patentable despite the prior art, and that either might properly be the basis for claims corresponding to the interference issues. And therefore, that, although it now appears that the original Tebbetts & Doggett claims—now claims 21 and 22—correctly cover defendant's machine, but do not cover complainant's unless an unexpressed element is read into them, defendant cannot now avail of that fact to limit these two claims of the patent. We are referred to no authority in support of this

Digitized by Google

contention. It has not been the tendency of the decisions either of the supreme court or of the circuit courts or courts of appeal to extend the effect of interference decisions as final adjudications, and we concur with the circuit court in the conclusion that, "while the decision in interference may be res adjudicata as to priority, it does not preclude defendant from raising other questions not in issue in said proceedings." The decree of the circuit court is reversed, with costs, and cause remitted with instructions to dismiss the bill.

(79 Fed. 442.)

EXCELSIOR ELEVATOR GUARD & HATCH COVER CO. v. FOOTE et al.

(Circuit Court of Appeals, Second Circuit. February 23, 1897.)

PATENTS—INVENTION—MECHANICAL SKILL—HOISTWAY COVERS.

The Fraser patent, No. 278,528, for means for closing and controlling hoistway covers, consisting of a combination of a number of doors, a cord or chain, a number of catches, and a connection between the catch of one door and an adjacent door, so that the closing of the latter will release the former, and admit of its closing, is void, as showing mere mechanical skill in modifying the pre-existing Hackett devices (patent No. 260,675).

Appeal from the Circuit Court of the United States for the Southern District of New York.

This is an appeal from the circuit court, Southern district of New York, dismissing complainant's bill. 74 Fed. 792. The suit is brought for infringement of the first claims of United States patent 278,528, dated May 29, 1883, to Daniel Fraser, for "means for closing and controlling hoistway covers."

Clifton V. Edwards, for appellant.

S. O. Edmonds, for appellees.

Before LACOMBE and SHIPMAN, Circuit Judges.

LACOMBE, Circuit Judge. The specification sets forth that the improvement, so far as it is relevant to the issue in this suit, "consists in the combination with a number of hinged doors and a cord or chain for opening and closing them of a number of catches for engaging with the doors when opened, and serving to hold them open independently of the cord or chain, and a connection between the catch of one door and an adjacent door, so that the closing of the last-mentioned door will effect the release of the other door from its catch, and admit of its closing." The mechanism is intended for use in buildings where there are hatchways one above the other for several successive stories. All the doors of these hatchways may thus be opened or closed without it being necessary for the operator to leave the one floor, top or bottom, on which the operating windlass is located. The doors are opened or closed not all at the same time, but successively, thus avoiding excessive strain upon the operating rope. The catches hold the doors when open, so as also to relieve that rope of strain. The release of each catch only by the closing of the door ahead of it insures the certainty that when the last door of the series closes all

Digitized by Google

the doors ahead of it in the series have also closed. The claim reads as follows:

"(1) The combination with a number of hinged doors and a cord or chain for opening and closing them of a number of catches for engaging with the doors when opened, and serving to hold them open independently of the cord or chain, and a connection between the catch of one door and an adjacent door, so that the closing of the last-mentioned door will effect the release of the other door from its catch, and admit of its closing, substantially as specified."

The operation of a series of hatchway doors by a single cord or chain, so that the operator need not leave the windlass on top or bottom floor, was old. It was old to so arrange the mechanism that the doors would open and close successively and relieve strain. It was old to hold the doors, when opened, by engaging catches independently of the chain. It was old to release the catches by a pull upon a cord which was convenient to the hand of the operator. All this is disclosed in a patent to Sinclair,—No. 84,387, November 24, 1868, reissue No. 5,387, April 29, 1873,—and it is conceded that the only novel feature which the patentee introduced in the structure is the "connection between the catch of one door and an adjacent door." This particular device is thus described in the patent:

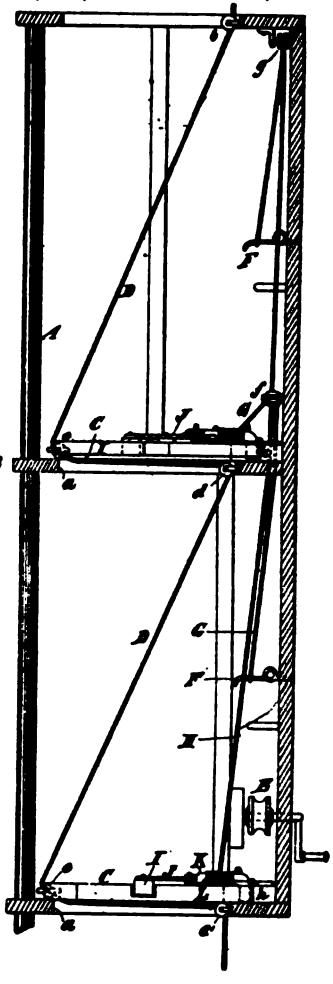

"F designates catches arranged on the back of the hoistway, adapted to engage with projections on the front edges of the doors when the latter are raised, so as to secure them in upright positions, and relieve the chain or rope, D, of strain. These catches may be pivoted in place, and impelled downward at the forward end by springs or by weight; or they may have resilient shanks, as shown. To the upper catch is attached a cord, H, which passes around a pulley, g, arranged on the back of the hoistway above, and thence down the hoistway, where it is secured to the door below, forward of its hinges. When it is desired to release the upper door, C, this cord, H, is pulled, so as to disengage its catch from it, and then the windlass, E, is turned, so as to pay out the chain or cord, and allow of the descent of the said door. To the catch of the lower door is attached a cord, G, which passes up the hoistway, around a pulley, f, arranged on the back of the hoistway, above the upper door, and thence to the upper door, forward of the hinges, where it is fastened. This cord, G, is so short that, just before the upper door closes, it pulls the cord sufficiently to effect the disengagement of the catch of the lower door from it. If, then, the windlass is turned so as to pay out the chain or rope, D, the lower door may be closed. The cord, H, is connected to the lower door, and operated by the closing of said door."

Digitized by Google

Connections between different members of a mechanical series, whereby some movement of one member will induce or permit a like movement in some other like member, are very old in the mechanic arts generally. The record here shows that such connections had been used in this particular art. (See Fig. 14 of United States patent to Hackett, No. 260,675, July 4, 1882.) The desirability of opening the catches of hatchway doors successively had also been made manifest. The device of the Sinclair patent opened them all simultaneously by a pull on a single rope. It was, therefore, modified in practice before the patent in suit by attaching a separate rope to each catch, and running the rope down through the several floors below the catch to which it was attached, so that the ends of all these ropes were convenient to the operator at the windlass. When he had lowered one door, he pulled the catch of the next, and lowered that, and so on till all were down. In view of the state of the art, we concur with the judge who heard the cause in the circuit court that there was no invention in turning each one of these ropes over one or more pulleys, and connecting it with a descending door, so that, as the latter closed, it would pull upon and lift the catch. The device in the Hackett patent, above referred to, was one whereby the opening and closing of a small door which covered that part of a hatchway that was located in the jamb between the vertical guide posts was effected by the opening or closing of the large door covering the main hatchway. The device is thus described:

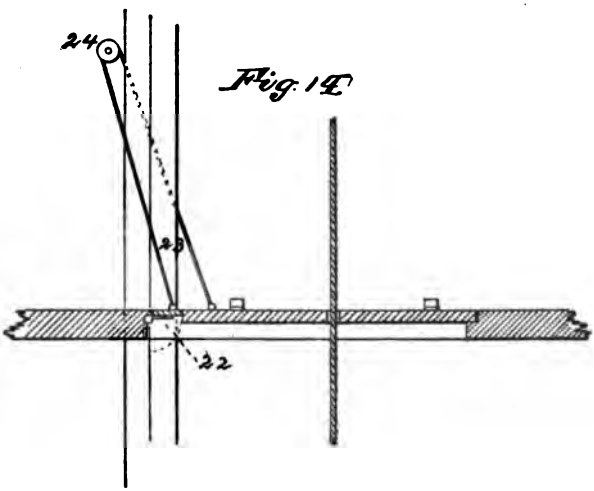

"In some places this small door must of necessity open downward instead of upward; for instance, when a passageway is to be had on the level of the floor directly into the elevator from the side on which the small door is placed. In Fig. 14 will be seen a slight modification of the construction shown in the other figures, to meet this necessity. 22 is the small door. 23 is a small rope leading from its upper surface over a pulley, 24, placed at the side or rear of one of the guide posts, and down to the top side of the large door. When the large door is closed, the rope, 23, is taut, and holds up the door, 22, in a hori-

Digitized by Google

zontal position. When the large door is raised upward, the cord, 23, slackening, permits the small door, 22, to pass downward out of the path of the elevator car."

The only criticism complainant's expert makes upon this device is that there is no indication in Hackett's patent that all the doors are down when the lowermost door is closed; and that it does not contain all the elements of the first claim of the Fraser patent, since "the catches and the connection between one door and the catch of an adjacent door, so that the closing of the last-mentioned door will effect the release of the other from its catch and admit of its closing, are lacking." Undoubtedly Hackett's device is no anticipation of Fraser's, but it is a part of the art, which must be assumed to be familiar to every one who subsequent to 1882 undertook to modify or improve hatchway door closing devices. The modified form of Sinclair's mechanism pointed out the desirability of opening the catches successively. The advantages of doing this automatically instead of by successive pulls by the operator on a number of different cords was surely self-evident, and, that being the problem, it certainly did not require more than the ordinary skill of the mechanic to adapt Hackett's connection between two doors to serve as a connection between door and catch. The decree of the circuit court is affirmed, with costs.

MEMORANDUM DECISIONS.

(79 Fed. 989.)

THE ADVANCE. ATLANTIC TRUST CO. v. PROCEEDS OF THE ADVANCE et al. (Circuit Court of Appeals, Second Circuit. May 12, 1896.) No. 707. Appeal from the District Court of the United States for the Southern District of New York. Cary & Whibridge, for appellants. Carter & Ledyard, for appellee. Discontinued by consent.

(79 Fed. 989.)

THE ADVANCE. HARD et al. v. PROCEEDS OF THE ADVANCE. (Circuit Court of Appeals, Second Circuit. May 12, 1896.) No. 710. Appeal from the District Court of the United States for the Southern District of New York. Cary & Whibridge, for appellants. Carter & Ledyard, for appellee. Discontinued by consent.

(79 Fed. 989.)

THE ALLIANCA. LONDON ASSUR. CORP. v. THE ALLIANCA et al. (Circuit Court of Appeals, Second Circuit. March 19, 1896.) No. 621. Appeal from the District Court of the United States for the Southern District of New York. Willard Parker Butler, for appellant. Carter & Ledyard, for appellees. Discontinued.

Digitized by Google

(79 Fed. 989.)

AMERICAN BUTTONHOLE, OVERSEAMING & SEWING MACHINE CO. v. BABCOCK. (Circuit Court of Appeals, Sixth Circuit. October 19, 1896.) No. 421. Submitted on briefs from the circuit court of the United States for the Eastern district of Michigan. George W. Radford, for appellant. Bowen, Douglas & Whiting, for appellee. No opinion. Judgment affirmed.

(79 Fed. 989.)

AMERICAN GROCERY CO. v. GODILLOT. (Circuit Court of Appeals, Third Circuit. February 22, 1897.) Appeal from the Circuit Court of the United States for the District of New Jersey. J. C. Clayton, for appellant. H. Aplington, for appellee. Before DALLAS, Circuit Judge, and BUTLER and WALES, District Judges.

PER CURIAM. The judges by whom this case was heard, including the late Judge WALES, had, some time previous to his death, all agreed upon the disposition to be made of it. The survivors of those who then constituted the court do not deem it necessary, under the circumstances, to do more than announce the judgment which had thus been unanimously determined upon. In accordance therewith the decree of the court below is affirmed.

(79 Fed. 990.)

ANDERSON v. MACKAY. (Circuit Court of Appeals, Second Circuit. November 11, 1895.) No. 630. Error from the Circuit Court of the United States for the Southern District of New York. George Putnam Smith, for plaintiff in error. Robert H. Griffin, for defendant in error. Dismissed on motion.

(79 Fed. 990.)

ASPINWALL v. GLENN. (Circuit Court of Appeals, Second Circuit. October 15, 1891.) No. 313. Appeal from the Circuit Court of the United States for the Southern District of New York. George Zabriskie, for appellant. B. N. Harrison, for appellee. No opinion. Decree affirmed, with costs.

(79 Fed. 990.)

THE BEACONSFIELD. SANBERN v. THE BEACONSFIELD et al. (Circuit Court of Appeals, Second Circuit. June 19, 1895.) No. 432. Appeal from the Circuit Court of the United States for the Southern District of New York. J. Parker Kirlin, for William Libbey. George A. Black, for claimant Elizabeth Cleugh. Sidney Chubb, for libelants. Dismissed by consent.

(79 Fed. 990.)

BRANCHI v. GLENN. (Circuit Court of Appeals, Second Circuit.) No. 314. Appeal from the Circuit Court of the United States for the Southern District of New York. George Zabriskie, for appellant. B. N. Harrison, Charles Marshall, and A. H. Masten, for appellee. No opinion. Decree affirmed, with costs, on opinion in Furnald v. Glenn, 12 C. C. A. 27, 64 Fed. 49.

Digitized by Google

(79 Fed. 990.)

BROWN et al. v. PRINCE STEAM SHIPPING CO., Limited. HARTMAN v. SAME.[1] (Circuit Court of Appeals, Fifth Circuit. December 1, 1896.) No. 497. Appeal from the District Court of the United States for the Eastern District of Louisiana. Before PARDEE and McCORMICK, Circuit Judges, and SPEER, District Judge.

PER CURIAM. The appeals in the above-entitled consolidated cause were heard shortly prior to the close of the last term, but, owing to the voluminous record and briefs and sickness among the judges, were not then decided. The controlling question is whether the supplies furnished by W. H. Brown Sons to the steamship Moorish Prince, and services rendered by Charles Hartman to the steamship British Prince, were supplies furnished and services rendered respectively on the credit of the ships, or upon contracts with, and on the credit of, the charterers, the Metropolitan Trading Association, Limited, of London. After a careful consideration of the conflicting evidence and of the able briefs and oral arguments submitted, we reach the conclusion that the decrees of the district court dismissing the appellant's libels are in accordance with the preponderance of evidence, and therefore said decrees are affirmed.

(79 Fed. 990.)

BRYSON et al. v. KOONS. (Circuit Court of Appeals, Fourth Circuit. February 12, 1897.) No. 213. Error to the Circuit Court of the United States for the Western District of North Carolina. Moore & Moore, for defendant in error. No opinion. Cause docketed and dismissed on certificate of clerk, pursuant to sixteenth rule; plaintiffs in error having failed to file record by return day of the writ of error.

(79 Fed. 991.)

BUFFALO BILL'S WILD WEST CO. v. ROSER. (Circuit Court of Appeals, Second Circuit. March 11, 1896.) No. 591. In Error to the Circuit Court of the United States for the Southern District of New York. S. L. Samuels, for plaintiff in error. R. H. Landale, for defendant in error. No opinion. Reversed in open court.

(79 Fed. 991.)

BURT v. GLENN. (Circuit Court of Appeals, Second Circuit.) No. 315. Appeal from the Circuit Court of the United States for the Southern District of New York. George Zabriskie, for appellant. B. N. Harrison, Charles Marshall, and A. H. Masten, for appellee. No opinion. Decree affirmed, with costs, on opinion in Furnald v. Glenn, 12 C. C. A. 27, 64 Fed. 49.

(79 Fed. 991.)

CANADA SHIPPING CO. v. HASKELL. (Circuit Court of Appeals, First Circuit. November 28, 1896.) No. 133. Appeal from the District Court of the United States for the District of Massachusetts. Edward S. Dodge, for appellant. Frederic Cunningham, for appellee. Dismissed pursuant to stipulation of counsel, without costs to either party.

---

[1] Rehearing denied January 26, 1897.

Digitized by Google

(79 Fed. 991.)

CHASE v. CATLIN. (Circuit Court of Appeals, Second Circuit. December 20, 1895.) No. 526. Appeal from the Circuit Court of the United States for the Southern District of New York. W. P. Preble, Jr., for appellant. Knevals & Perry, for appellee. No opinion. Ordered dismissed.

(79 Fed. 991.)

Ex Parte CITIZENS' NAT. BANK OF DES MOINES, IOWA. SPARKS v. NATIONAL MASONIC ACC. ASS'N OF DES MOINES, IOWA. (Circuit Court of Appeals, Eighth Circuit. December 8, 1896.) No. 7, original. Petition in the alternative for writ of mandamus to compel the allowance of a writ of error and supersedeas by the circuit court of the United States for the Southern district of Iowa, or for the allowance of a writ of error and supersedeas by the circuit court of appeals. Clark Varnum, for petitioner. No opinion. Denied.

(79 Fed. 992.)

CITY OF HASTINGS, NEB., v. THOMAS. (Circuit Court of Appeals, Eighth Circuit. January 18, 1897.) No. 825. Error to the Circuit Court of the United States for the District of Nebraska. Harry S. Dungan, for plaintiff in error. Lionel C. Burr and Charles L. Burr, for defendant in error. No opinion. Affirmed, with costs.

(79 Fed. 992.)

CITY OF HUMBOLDT v. JACKSON et al. (Circuit Court of Appeals, Eighth Circuit. December 9, 1896.) No. 665. Error to the Circuit Court of the United States for the District of Kansas. L. W. Keplinger, for plaintiff in error. C. E. Epler, B. P. Waggener, David Martin, James W. Orr, W. C. Perry, and John H. Crain, for defendants in error. Dismissed, with costs, pursuant to stipulation of the parties.

(79 Fed. 992.)

CITY OF OMAHA et al. v. NEW ENGLAND LOAN & TRUST CO. (Circuit Court of Appeals, Eighth Circuit. May 13, 1896.) No. 746. Appeal from the Circuit Court of the United States for the District of Nebraska. W. J. Connell, for appellants. E. D. Samson, for appellee. No opinion. Dismissed, with costs, pursuant to twenty-third rule, for failure to print record, on motion of appellee.

(79 Fed. 992.)

COCKRILL v. WOODSON et al. (Circuit Court of Appeals, Eighth Circuit. December 8, 1896.) No. 883. Error to the Circuit Court of the United States for the Western District of Missouri. Ben. J. Woodson, for defendants in error. No opinion. Docketed and dismissed, with costs, pursuant to the sixteenth rule, on motion of counsel for defendants in error.

Digitized by Google

(79 Fed. 993.)

DANIEL v. BROWN et al. (Circuit Court of Appeals, Eighth Circuit. December 9, 1896.) No. 733. Appeal from the Circuit Court of the United States for the District of Colorado. Charles J. Hughes, Jr., for appellant. C. S. Thomas, Wm. H. Bryant, and H. H. Lee, for appellees. No opinion. Dismissed, with costs, pursuant to the twenty-third rule, for failure to print the record, on motion of counsel for appellees.

(79 Fed. 993.)

DAVIS v. CORNWALL. (Circuit Court of Appeals, Second Circuit. May 28, 1895.) No. 207. Appeal from the Circuit Court of the United States for the Southern District of New York. W. S. Logan, for appellant. A. B. Maltby, for appellee. No opinion. Judgment affirmed.

(79 Fed. 993.)

DAVIS v. WAKELEE. (Circuit Court of Appeals, Second Circuit. May 28, 1895.) No. 206. Appeal from the Circuit Court of the United States for the Southern District of New York. W. S. Logan, for appellant. A. B. Maltby, for appellee. No opinion. Judgment affirmed.

(79 Fed. 993.)

EAUCABERT v. APPLETON. (Circuit Court of Appeals, Second Circuit. November 8, 1895.) No. 479. Appeal from the Circuit Court of the United States for the Southern District of New York. Francis Forbes, for appellant. R. B. McMaster, for appellee. No opinion. Ordered dismissed, with costs.

(79 Fed. 993.)

EBNER v. JUNEAU MIN. & MANUF'G CO. et al. (Circuit Court of Appeals, Ninth Circuit. February 4, 1897.) No. 331. Appeal from the District Court of the United States for the District of Alaska. William Hoff Cook, for appellant. Lorenzo S. B. Sawyer, for appellees. No opinion. Appeal dismissed on motion of Lorenzo S. B. Sawyer.

(79 Fed. 993.)

EDDY v. GLENN. (Circuit Court of Appeals, Second Circuit.) No. 317. Appeal from the Circuit Court of the United States for the Southern District of New York. George Zabriskie, for appellant. B. N. Harrison, Charles Marshall, and A. H. Masten, for appellee. No opinion. Decree affirmed, with costs, on opinion in Furnald v. Glenn, 12 C. C. A. 27, 64 Fed. 49.

(79 Fed. 994.)

EDISON ELECTRIC LIGHT CO. v. STAFFORD et al. (Circuit Court of Appeals, Second Circuit. July 26, 1895.) No. 466. Appeal from the Circuit Court of the United States for the Southern District of New York. E. H. Lewis and Dyer & Seely, for appellant. Hobbs & Gifford, for appellees. Dismissed by consent.

Digitized by Google

(79 Fed. 994.)

EXCELSIOR PEBBLE PHOSPHATE CO. et al. v. BROWN et al. (Circuit Court of Appeals, Fourth Circuit. November 11, 1896.) No. 169. Appeal from the Circuit Court of the United States for the District of West Virginia. W. E. Chilton, for appellants. J. S. Sanderson, for appellees. No opinion. Cause dismissed, pursuant to twenty-third rule, for failure to file printed records.

(79 Fed. 994.)

FARMERS' LOAN & TRUST CO. et al. v. FARMERS' LOAN & TRUST CO. (BILL, Intervener). (Circuit Court of Appeals, Eighth Circuit. November 9, 1896.) No. 776. Appeal from the Circuit Court of the United States for the District of North Dakota. D. A. Lindsay and F. W. M. Cutcheon, for appellants. Samuel L. Glaspell, for Bill, intervener. Dismissed on motion of appellants.

(79 Fed. 994.)

FARMERS' LOAN & TRUST CO. et al. v. FARMERS' LOAN & TRUST CO. (COMASKY, Intervener). (Circuit Court of Appeals, Eighth Circuit. November 9, 1896.) No. 775. Appeal from the Circuit Court of the United States for the District of North Dakota. D. A. Lindsay and F. W. M. Cutcheon, for appellants. Taylor Crum, for Comasky, intervener. Dismissed on motion of appellants.

(79 Fed. 994.)

FARMERS' LOAN & TRUST CO. et al. v. FARMERS' LOAN & TRUST CO. (CONATY et al., Interveners). (Circuit Court of Appeals, Eighth Circuit. November 16, 1896.) No. 777. Appeal from the Circuit Court of the United States for the District of North Dakota. D. A. Lindsay and F. W. M. Cutcheon, for appellants. Samuel L. Glaspell, for Conaty and others, interveners. Dismissed on motion of appellants.

(79 Fed. 994.)

FIDELITY INSURANCE, TRUST & SAFE-DEPOSIT CO. et al. v. VIRGINIA & T. COAL & IRON CO. (Circuit Court of Appeals, Fourth Circuit. February 13, 1897.) No. 177. Appeal from the Circuit Court of the United States for the Eastern District of Virginia. Wm. W. Old and Richard C. Dale, for appellants. Daniel Trigg, for appellee. No opinion. Cause settled and dismissed, pursuant to the twentieth rule.

(79 Fed. 994.)

FOPPES et al. v. UNITED STATES. (Circuit Court of Appeals, Second Circuit. December 2, 1895.) No. 680. Appeal from the Circuit Court of the United States for the Southern District of New York. Stanley, Clark & Smith, for appellants. Wallace Macfarlane, U. S. Atty. No opinion. Appeal dismissed.

Digitized by Google

(79 Fed. 995.)

FOPPES et al. v. UNITED STATES. (Circuit Court of Appeals, Second Circuit. May 27, 1896.) No. 725. Appeal from the Circuit Court of the United States for the Southern District of New York. Stanley, Clark & Smith, for appellants. Wallace Macfarlane, U. S. Atty. Dismissed on consent.

(79 Fed. 995.)

FOPPES et al. v. UNITED STATES. (Circuit Court of Appeals, Second Circuit. January 23, 1895.) No. 397. Appeal from the Circuit Court of the United States for the Southern District of New York. Edwin V. Smith, for appellants. Henry C. Platt, Asst. U. S. Atty. No opinion. Decree affirmed.

(79 Fed. 995.)

FOWLER MANUF'G CO. v. PIERPONT BOILER CO. (Circuit Court of Appeals, Sixth Circuit. July 8, 1896.) No. 436. Appeal from the Circuit Court of the United States for the Northern District of Ohio, Eastern Division. Lawrence Maxwell, Jr., and Ephraim Banning, for appellant. Thomas W. Bakewell, for appellee. No opinion. Judgment affirmed.

(79 Fed. 995.)

FRANKEL et al. v. UNITED STATES. (Circuit Court of Appeals, Second Circuit. March 9, 1896.) No. 588. Appeal from the Circuit Court of the United States for the Southern District of New York. Currie, Smith & Mackie, for appellants. Wallace Macfarlane, U. S. Atty. No opinion. Affirmed in open court.

(79 Fed. 995.)

GARNER v. SECOND NAT. BANK OF PROVIDENCE, R. I. (Circuit Court of Appeals, Second Circuit. March 2, 1896.) No. 681. In error to the Circuit Court of the United States for the Southern District of New York. Aleck Thain, for plaintiff in error. J. Langdon Ward, for defendant in error. No opinion. Dismissed, pursuant to the sixteenth rule.

(79 Fed. 995.)

THE GEORGE S. HOMER. HARRIS v. THE GEORGE S. HOMER et al. (Circuit Court of Appeals, Second Circuit. December 19, 1894.) No. 404. Appeal from the District Court of the United States for the Eastern District of New York. J. A. Hyland, for appellants. E. L. Owen, for appellee. No opinion. Affirmed in open court.

(79 Fed. 995.)

GOUGAR v. MORSE. (Circuit Court of Appeals, First Circuit. November 10, 1896.) No. 178. Error to the Circuit Court of the United States for the District of Massachusetts. Harvey N. Shepard, for plaintiff in error. Henry F. Bushnell, for defendant in error. No opinion. Dismissed for failure to print record.

Digitized by Google

(79 Fed. 996.)

GRAVES v. STEWART et al. (Circuit Court of Appeals, Second Circuit. April 20, 1896.) No. 633. Error from the Circuit Court of the United States for the Northern District of New York. George L. Lewis, for plaintiff in error. John G. Milburn, for defendants in error. No opinion. Judgment of circuit court affirmed, with interest and costs.

(79 Fed. 996.)

HARVEY v. WINNEY. (Circuit Court of Appeals, Sixth Circuit. April 24, 1896.) No. 405. Appeal from the District Court of the United States for the Eastern District of Michigan. H. C. Wisner and Fred C. Harvey, for appellant. John C. Shaw, for appellee. No opinion. Judgment of district court affirmed.

(79 Fed. 996.)

HAYDEN v. BROWN. (Circuit Court of Appeals, Second Circuit. February 3, 1896.) No. 607. Appeal from the Circuit Court of the United States for the District of Vermont. W. L. Burnap and T. G. Strong, for appellant. George W. Ellis, for appellee. No opinion. Order entered on consent reversing judgment.

(79 Fed. 996.)

HUBBARD v. TOD et al. (Circuit Court of Appeals, Eighth Circuit. April 13, 1896.) No. 641. Appeal from the Circuit Court of the United States for the Northern District of Iowa. John C. Coombs and Henry J. Taylor, for appellant. Francis B. Daniels, D. B. Henderson, Louis G. Hurd, George W. Wickersham, and George W. Kiesel, for appellees. No opinion. Affirmed by a divided court, and costs equally divided.

(79 Fed. 997.)

JONES v. MEEHAN et al. (Circuit Court of Appeals, Eighth Circuit. May 28, 1896.) No. 771. Appeal from the Circuit Court of the United States for the District of Minnesota. James A. Kellogg, for appellant. Orville Rinehart, C. D. O'Brien, and Thomas D. O'Brien, for appellees. No opinion. Dismissed, with costs, for want of jurisdiction, on motion of appellees.

(79 Fed. 997.)

KELLEY-GOODFELLOW SHOE CO. et al. v. SCALES et al. (Circuit Court of Appeals, Eighth Circuit. December 8, 1896.) No. 640. Error to the United States Court for the Northern District of Indian Territory. Harrison O. Shepard and Joseph M. Hill, for plaintiffs in error. William T. Hutchings, for defendants in error. No opinion. Dismissed, with costs, pursuant to the twenty-second rule, for want of prosecution.

(79 Fed. 997.)

KING et al. v. LEWIS. (Circuit Court of Appeals, Sixth Circuit. October 26, 1896.) No. 444. Appeal from the Circuit Court of the United States for the Northern District of Ohio, Eastern Division. J. W. Jenner, for plaintiffs Darius Dirlam, for defendant. No opinion. Judgment affirmed.

Digitized by Google

(78 Fed. 925.)

KING v. McCLINTOCK et al.

(Circuit Court of Appeals, Fourth Circuit. February 2, 1897.)

No. 184.

INJUNCTION—DISSOLUTION.

Appeal from the Circuit Court of the United States for the District of West Virginia.

Maynard F. Stiles, for appellant.
Z. T. Vinson, for appellees.

Before SIMONTON, Circuit Judge, and MORRIS and BRAWLEY, District Judges.

SIMONTON, Circuit Judge. This case presents precisely the same facts and the same questions as that of King v. Buskirk, 24 C. C. A. 82, 78 Fed. 233. The appellant is the same person as the appellant in that case, and the appellees were defendants in the injunction suits as well as in the action at law. The verdict of the jury was in their favor, and their motion to dissolve the injunction was based on that verdict. The decree of the circuit court is affirmed.

(79 Fed. 997.)

KINGMAN et al. v. WESTERN MANUF'G CO. (Circuit Court of Appeals, Eighth Circuit. May 21, 1896.) No. 763. Error to the Circuit Court of the United States for the District of Nebraska. James H. McIntosh, for plaintiffs in error. G. M. Lambertson and Walter J. Lamb, for defendant in error. No opinion. Dismissed, with costs, for want of jurisdiction, on motion of defendant in error.

(79 Fed. 997.)

KINNEY et al. v. CUNNINGHAM et al. (Circuit Court of Appeals, Eighth Circuit. December 18, 1896.) No. 798. Appeal from the Circuit Court of the United States for the District of Nebraska. Carroll S. Montgomery and Matthew A. Hall, for appellants. D. W. Merrow, for appellees. Dismissed, at costs of appellants, without attorney fee in the court of appeals or the circuit court, pursuant to stipulation of the parties.

(79 Fed. 997.)

MAGNA CHARTA SILVER MINING & TUNNEL CO. et al. v. HOLE. (Circuit Court of Appeals, Eighth Circuit. June 29, 1896.) No. 822. Appeal from the Circuit Court of the United States for the District of Colorado. E. Sowers, for appellee. No opinion. Docketed and dismissed, with costs, pursuant to the sixteenth rule, on motion of appellee.

(79 Fed. 998.)

MAYER v. GLENN. (Circuit Court of Appeals, Second Circuit.) No. 321. Appeal from the Circuit Court of the United States for the Southern District of New York. George Zabriskie, for appellant. B. N. Harrison, Charles Marshall, and A. H. Masten, for appellee. No opinion. Decree affirmed, with costs, on opinion in Furnald v. Glenn, 12 C. C. A. 27, 64 Fed. 49.

Digitized by Google

(79 Fed. 998.)

MILLER v. CHOCTAW, O. & G. RY. CO. (Circuit Court of Appeals, Eighth Circuit. September 15, 1896.) No. 654. No opinion. Judgment of dismissal vacated and set aside, and cause restored to the docket.

(79 Fed. 998.)

MISSOURI PAC. RY. CO. v. SIDELL. (Circuit Court of Appeals, Second Circuit. February 20, 1896.) No. 636. Appeal from the Circuit Court of the United States for the Southern District of New York. W. S. Pierce, for appellant. C. D. Ingersoll, for appellee. No opinion. Affirmed in open court.

(79 Fed. 998.)

MOORE v. CLARK et al. (Circuit Court of Appeals, Second Circuit. January 23, 1896.) No. 564. Appeal from the Circuit Court of the United States for the Southern District of New York. Frank J. Mather, for appellants. W. P. Preble, Jr., for appellee. No opinion. Appeal dismissed.

(79 Fed. 999.)

MORRIS et al. v. UNITED STATES. (Circuit Court of Appeals, Second Circuit. January 23, 1896.) No. 536. Appeal from the Circuit Court of the United States for the Southern District of New York. Comstock & Brown, for appellants. Wallace Macfarlane, U. S. Atty. No opinion. Affirmed in open court.

(79 Fed. 999.)

MULCAHEY v. LAKE ERIE & W. RY. CO. (Circuit Court of Appeals, Sixth Circuit. December 9, 1896.) No. 384. Appeal from the Circuit Court of the United States for the Western Division of the Northern District of Ohio. Chas. A. Thatcher, for plaintiff in error. J. B. Cockrum, for defendant in error. No opinion. Case reversed and remanded, with directions to remand to state court.

(79 Fed. 999.)

MUNROE et al. v. PHILADELPHIA WAREHOUSE CO.

(Circuit Court of Appeals, Third Circuit. January 15, 1897.)

No. 29.

ASSIGNABILITY OF BILL OF LADING.

Error to the Circuit Court of the United States for Eastern District of Pennsylvania.

For opinion, see 75 Fed. 545.

A. H. Wintersteen, for plaintiff in error.
Joseph de F. Junkin, for defendant in error.

It is hereby agreed that the writ of error in the above-entitled cause shall be dismissed, and the clerk of the court is directed to dismiss the same. The costs and fees of the clerk are to be paid by the plaintiff. All other costs and fees due to either of the parties are hereby waived and remitted.

Digitized by Google

(79 Fed. 999.)

Ex parte NATIONAL MASONIC ACC. ASS'N OF DES MOINES, IOWA. SPARKS v. NATIONAL MASONIC ACC. ASS'N OF DES MOINES, IOWA. (Circuit Court of Appeals, Eighth Circuit. December 8, 1896.) No. 6, original. Petition in the alternative for writ of mandamus to compel the allowance of a writ of error and supersedeas by the circuit court of the United States for the Southern district of Iowa, or for the allowance of a writ of error and supersedeas by the circuit court of appeals. Clark Varnum, for petitioner. No opinion. Denied.

(79 Fed. 999.)

NEWKIRK v. McCOOK et al. (Circuit Court of Appeals, Eighth Circuit. December 21, 1896.) No. 807. Error to the Circuit Court of the United States. for the District of Kansas. John W. Deford, for plaintiff in error. A. A. Hurd and W. Littlefield, for defendants in error. No opinion. Affirmed, with costs.

(79 Fed. 999.)

THE NORMA. SULLIVAN v. THE NORMA et al. (Circuit Court of Appeals, Second Circuit. April 22, 1896.) No. 652. Appeal from the District Court of the United States for the Southern District of New York. H. W. Bates, for appellant. Wing, Putnam & Burlingham, for appellees. No opinion. Affirmed in open court.

(79 Fed. 1000.)

NORTHERN PAC. RY. CO. v. DE LACEY. (Circuit Court of Appeals. Ninth Circuit. February 8, 1897.) No. 339. Error to the Circuit Court of the United States for the District of Washington, Western Division. D. J. Crowley, B. S. Grosscup, and F. M. Dudley, for plaintiff in error. A. W. Ballard, for defendant in error. No opinion. Motion to dismiss denied, and judgment of the circuit court affirmed, with costs.

(79 Fed. 1000.)

OLSON v. SNYDER. (Circuit Court of Appeals, Eighth Circuit. December 8, 1896.) No. 735. Appeal from the Circuit Court of the United States for the District of Nebraska. Richard H. Manning, for appellant. John G. Manahan, for appellee. No opinion. Dismissed, with costs, pursuant to twenty-third rule, for failure to print record, on motion of counsel for appellee

---

(79 Fed. 1000.)

OREGON SHORT LINE & U. N. RY. CO. v. AMERICAN LOAN & TRUST CO. (Circuit Court of Appeals, Ninth Circuit. November 16, 1896.) No. 239. Appeal from the Circuit Court of the United States for the District of Oregon. R. S. Hall and Zera Snow, for appellant. J. N. Dolph, for appellee. Dismissed, pursuant to stipulation.

Digitized by Google

(79 Fed. 1000.)

OREGON SHORT LINE & U. N. RY. CO. v. AMERICAN LOAN & TRUST CO. (Circuit Court of Appeals, Ninth Circuit. November 16, 1896.) No. 282. Appeal from the Circuit Court of the United States for the District of Oregon. R. S. Hall and Zera Snow, for appellant. Dismissed, pursuant to stipulation.

(79 Fed. 1000.)

OREGON SHORT LINE & U. N. RY. CO. v. AMERICAN LOAN & TRUST CO. (Circuit Court of Appeals, Ninth Circuit. November 16, 1896.) No. 286. Appeal from the Circuit Court of the United States for the District of Oregon. R. S. Hall and Zera Snow, for appellant. Sanderson Reed and H. W. Gogue, for appellee. Dismissed, pursuant to stipulation.

(79 Fed. 1000.)

OREGON SHORT LINE & U. N. RY. CO. v. AMERICAN LOAN & TRUST CO. (Circuit Court of Appeals, Eighth Circuit. November 23, 1896.) No. 878. Appeal from the Circuit Court of the United States for the District of Wyoming. R. S. Hall, for appellant. Zera Snow, for appellee. Dismissed, pursuant to stipulation of the parties.

(79 Fed. 1000.)

PHILADELPHIA TRACTION CO. v. PALMER. (Circuit Court of Appeals, Third Circuit. February 22, 1897.) In Error to the Circuit Court of the United States for the Eastern District of Pennsylvania. J. Howard Gendell, for plaintiff in error. Ellery P. Ingham, for defendant in error. Before DALLAS, Circuit Judge, and BUTLER and WALES, District Judges.

PER CURIAM. The judges by whom this case was heard, including the late Judge WALES, had, some time previous to his death, all agreed upon the disposition to be made of it. The survivors of those who then constituted the court do not deem it necessary, under the circumstances, to do more than announce the judgment which had thus been unanimously determined upon. In accordance therewith the judgment of the court below is affirmed.

(79 Fed. 1001.)

POMEROY v. GLENN. (Circuit Court of Appeals, Second Circuit.) No. 319. Appeal from the Circuit Court of the United States for the Southern District of New York. George Zabriskie, for appellant. B. N. Harrison, Charles Marshall, and A. H. Masten, for appellee. No opinion. Decree affirmed, with costs, on opinion in Furnald v. Glenn, 12 C. C. A. 27, 64 Fed. 49.

(79 Fed. 1001.)

POPE MANUF'G CO. v. KIRKPATRICK. (Circuit Court of Appeals, Second Circuit. December 2, 1895.) In Error to the Circuit Court of the United States for the District of Connecticut. W. A. Redding, for plaintiff in error. Curr & Curtis, for defendant in error. No opinion. Dismissed, pursuant to the twentieth rule.

Digitized by Google

(79 Fed. 1001.)

RANDALL v. GLENN. (Circuit Court of Appeals, Second Circuit.) No. 320. Appeal from the Circuit Court of the United States for the Southern District of New York. George Zabriskie, for appellant. B. N. Harrison, Charles Marshall, and A. H. Masten, for appellee. No opinion. Decree affirmed, with costs, on opinion in Furnald v. Glenn, 12 C. C. A. 27, 64 Fed. 49.

(79 Fed. 1001.)

In re RICKS. (Circuit Court of Appeals, Fifth Circuit. April 28, 1896.) No. 495. Petition for mandamus requiring the judges of the circuit court for the Eastern district of Louisiana to grant an appeal in the cause of Charles Hoppe & Son Malting Co. against the New Orleans Brewing Association. W. D. Hart, for petitioner. No opinion. Petition refused.

(79 Fed. 1001.)

ROTH v. AMERICAN LOAN & TRUST CO. et al. (Circuit Court of Appeals, Ninth Circuit. February 1, 1897.) No. 351. Appeal from the Circuit Court of the United States for the District of Washington, Eastern Division. Wallace McCamant, for appellees. No opinion. Appeal dismissed, with costs, on motion of counsel for appellees.

(79 Fed. 1001.)

RUSS v. TELFENER.[1] (Circuit Court of Appeals, Fifth Circuit. November 24, 1896.) No. 537. In Error to the Circuit Court of the United States for the Western District of Texas. Before PARDEE and McCORMICK, Circuit Judges, and NEWMAN, District Judge.

PER CURIAM. When this case was last before the supreme court of the United States (16 Sup. Ct. 695), the contract upon which the plaintiff in error sues was fully examined, considered, and construed, leaving, in our opinion, no ground upon which Russ, plaintiff below, plaintiff in error here, can maintain a suit thereon. The judgment of the circuit court was to this effect, and is affirmed.

(79 Fed. 1002.)

THE SAGINAW VALLEY. CALVIN et al v. ESCANABA TOWING & WRECKING CO. (Circuit Court of Appeals, Sixth Circuit. October 14, 1896.) No. 423. Appeal from the District Court of the United States for the Western District of Michigan, Northern Division. F. Howard Mason, for appellants. John C. Richberg, for appellee. No opinion. Judgment affirmed.

(79 Fed. 1002.)

THE SEGURANCA. BROWN et al. v. PROCEEDS OF THE SEGURANCA. (Circuit Court of Appeals, Second Circuit. May 12, 1896.) No. 709. Appeal from the District Court of the United States for the Southern District of New York. Cary & Whibridge, for appellants. Carter & Ledyard, for appellee. Discontinued by consent.

---

[1] Rehearing denied January 26, 1897.

Digitized by Google

(79 Fed. 1002.)

SEVERS et al. v. BULL. (Circuit Court of Appeals, Eighth Circuit. June 6, 1896.) No. 812. In Error to the United States Court of Appeals of Indian Territory. P. L. Soper and Thomas A. Sanson, Jr., for defendant in error. No opinion. Docketed and dismissed, pursuant to sixteenth rule, on motion of defendant in error.

(79 Fed. 1002.)

SEVERS et al. v. NORTHERN TRUST CO. (Circuit Court of Appeals, Eighth Circuit. June 6, 1896.) No. 811. In Error to the United States Court of Appeals of Indian Territory. P. L. Soper and Thomas A. Sanson, Jr., for defendant in error. No opinion. Docketed and dismissed, pursuant to sixteenth rule, on motion of defendant in error.

(79 Fed. 1002.)

THE SINTRAN. MOSLE v. THE SINTRAN et al. (Circuit Court of Appeals, Second Circuit. February 7, 1896.) No. 574. Appeal from the District Court of the United States for the Southern District of New York. George A. Black, for appellant. Wing, Shoudy & Putnam, for appellees. No opinion. Affirmed in open court.

(79 Fed. 1002.)

SIOUX CITY, O'N. & W. R. CO. v. MANHATTAN TRUST CO. (Circuit Court of Appeals, Eighth Circuit. June 22, 1896.) No. 505. Appeal from the Circuit Court of the United States for the District of Nebraska. Henry J. Taylor, for appellant. John L. Webster, for appellee. No opinion. Decree of affirmance vacated, and case restored to docket. Affirmed by a divided court, and costs equally divided.

(79 Fed. 1002.)

SIOUX CITY, O'N. & W. R. CO. et al. v. MANHATTAN TRUST CO. (Circuit Court of Appeals, Eighth Circuit. June 22, 1896.) No. 661. Appeal from the Circuit Court of the United States for the District of Nebraska. John C. Coombs and Henry J. Taylor, for appellants. John L. Webster, for appellee. No opinion. Decree of affirmance vacated, and case restored to docket. Affirmed by divided court, and costs equally divided.

(79 Fed. 1002.)

SPENCER et al. v. USELTON. (Circuit Court of Appeals, Fifth Circuit. May 5, 1896.) No. 463. Appeal from the Circuit Court of the United States for the Northern District of Georgia. Dorsey, Bruce & Howell, for appellants. Reuben R. Arnold, for appellee. Cause dismissed on agreement of counsel.

(79 Fed. 1003.)

STABERG v. OLIVER MIN. CO. (Circuit Court of Appeals, Eighth Circuit. December 23, 1896.) No. 815. In Error to the Circuit Court of the United States for the District of Minnesota. John Rustgard, for plaintiff in error. William W. Billson, Chester A. Congdon, and Daniel A. Dickinson, for defendant in error. No opinion. Affirmed, with costs.

Digitized by Google

(79 Fed. 1003.)

STAHL v. WILLIAMS. (Circuit Court of Appeals, Second Circuit. December 3, 1895.) No. 567. Appeal from the Circuit Court of the United States for the District of Connecticut. Mitchell, Hungerford & Bartlett, for appellant. Newell & Jennings, for appellee. Dismissed by consent, without costs.

(79 Fed. 1003.)

STEINER et al. v. UNITED STATES. (Circuit Court of Appeals, Second Circuit. January 23, 1895.) No. 398. Appeal from the Circuit Court of the United States for the Southern District of New York. E. B. Smith, for appellants. Henry C. Platt, Asst. U. S. Atty. No opinion. Decree affirmed in open court.

(79 Fed. 1003.)

TOD et al. v. HUBBARD. (Circuit Court of Appeals, Eighth Circuit. April 13, 1896.) No. 704. Appeal from the Circuit Court of the United States for the Northern District of Iowa. George W. Wickersham, Daniel B. Henderson, Louis G. Hurd, Francis B. Daniels, and George W. Kiesel, for appellants. John C. Coombs and Henry J. Taylor, for appellee. No opinion. Affirmed by a divided court, and costs equally divided.

(79 Fed. 1003.)

TOWN OF CRIPPLE CREEK et al. v. MICHIGAN PIPE CO. (Circuit Court of Appeals, Eighth Circuit. January 4, 1897.) No. 890. Appeal from the Circuit Court of the United States for the District of Colorado. Charles M. Brown, for appellee. No opinion. Docketed and dismissed, with costs, pursuant to the sixteenth rule, on motion of counsel for appellee.

(79 Fed. 1003.)

TOWN OF PHELPS v. BRIGGS. (Circuit Court of Appeals, Second Circuit. July 29, 1896.) No. 748. In Error to the Circuit Court of the United States for the Northern District of New York. S. D. Bentley, for plaintiff in error. No opinion. Dismissed, pursuant to the sixteenth rule.

(79 Fed. 1003.)

UNION SWITCH & SIGNAL CO. et al. v. PHILADELPHIA & R. R. CO. et al. SAME v. ATLANTIC CITY R. CO. et al. (Circuit Court of Appeals, Third Circuit. January 27, 1897.) Nos. 37, 38. Appeals from the Circuit Court of the United States for the Eastern District of Pennsylvania. George H. Christy, for appellants. Wm. Houston Kenyon, for appellees. Dismissed per stipulation of parties. See 75 Fed. 1004.

(79 Fed. 1004.)

UNITED STATES v. BURR et al. (Circuit Court of Appeals, Second Circuit. November 12, 1895.) No. 490. Appeal from the Circuit Court of the United States for the Southern District of New York. Wallace Macfarlane, U. S. Atty. Currie, Smith & Mackie, for appellees. No opinion. Reversed. See 66 Fed. 742.

Digitized by Google

(79 Fed. 1004.)

UNITED STATES v. ELEVEN HUNDRED HEAD OF CATTLE. (Circuit Court of Appeals, Fifth Circuit. January 6, 1896.) Error to the District Court of the United States for the Western District of Texas. F. B. Earhart, for the United States. A. J. Evans, for defendant in error. Dismissed on motion of plaintiff in error.

(79 Fed. 1004.)

UNITED STATES v. GODWIN et al. (Circuit Court of Appeals, Second Circuit. December 19, 1895.) No. 551. Appeal from the Circuit Court of the United States for the Southern District of New York. Wallace Macfarlane, U. S. Atty. S. G. Clarke, for appellees. No opinion. Affirmed in open court.

(79 Fed. 1004.)

UNITED STATES v. GODWIN et al. (Circuit Court of Appeals, Second Circuit. December 20, 1895.) No. 558. Appeal from the Circuit Court of the United States for the Southern District of New York. Wallace Macfarlane, U. S. Atty. S. G. Clarke, for appellees. No opinion. Affirmed in open court.

(79 Fed. 1004.)

UNITED STATES v. HILL. (Circuit Court of Appeals, Eighth Circuit. December 7, 1896.) No. 751. Error to the Circuit Court of the United States for the District of Colorado. Henry V. Johnson, for plaintiff in error. H. W. Hobson, for defendant in error. Dismissed pursuant to stipulation of the parties, without costs to either party.

(79 Fed. 1004.)

UNITED STATES v. HUNTINGTON. (Circuit Court of Appeals, Second Circuit. December 30, 1892.) No. 115. Appeal from the Circuit Court of the United States for the Southern District of New York. Application of collector of customs for review of decision of board of appraisers as to rate of duty on 17 packages of theatrical effects. Edward Mitchell, U. S. Atty. Dittenhoefer & Gerber, for appellee. No opinion. Order affirmed.

(79 Fed. 1004.)

UNITED STATES v. LANDNER. (Circuit Court of Appeals, Second Circuit. December 13, 1894.) No. 384. Appeal from the Circuit Court of the United States for the Southern District of New York. Henry C. Platt, Asst. U. S. Atty. S. G. Clarke, for appellee. No opinion. Decree affirmed in open court.

(79 Fed. 1005.)

UNITED STATES v. LAWS. (Circuit Court of Appeals, Sixth Circuit. June 22, 1896.) No. 10. In Error to the Circuit Court of the United States for the Western Division of the Southern District of Ohio. John W. Herron and Harlan Cleveland, for the United States. Lawrence Maxwell, Jr., for defendant in error. No opinion. Judgment of circuit court affirmed.

Digitized by Google

(79 Fed. 1005.)

UNITED STATES v. McCANN. (Circuit Court of Appeals, Second Circuit. December 13, 1895.) No. 525. Appeal from the Circuit Court of the United States for the Southern District of New York. Wallace Macfarlane, U. S. Atty. Hartley & Coleman, for appellee. Reversed on stipulation that this cause abide event of U. S. v. Burr, 79 Fed. 1004.

(79 Fed. 1005.)

UNITED STATES v. NORDLINGER. (Circuit Court of Appeals, Second Circuit. October 21, 1895.) No. 580. Appeal from the Circuit Court of the United States for the Southern District of New York. Wallace Macfarlane, U. S. Atty. Comstock & Brown, for appellee. No opinion. Appeal dismissed.

(79 Fed. 1005.)

UNITED STATES v. PASSAVANT et al. (Circuit Court of Appeals, Second Circuit. December 11, 1895.) No. 545. Appeal from the Circuit Court of the United States for the Southern District of New York. Wallace Macfarlane, U. S. Atty. S. G. Clarke, for appellees. Reversed on stipulation that this cause abide event of U. S. v. Burr, 79 Fed. 1004.

(79 Fed. 1005.)

UNITED STATES v. VAUTINE et al. (Circuit Court of Appeals, Second Circuit. December 17, 1896.) No. 524. Appeal from the Circuit Court of the United States for the Southern District of New York. Wallace Macfarlane, U. S. Atty. W. B. Coughtry, for appellees. No opinion. Affirmed in open court.

(79 Fed. 1005.)

UNITED STATES v. ZEIMER et al. (Circuit Court of Appeals, Second Circuit. January 11, 1896.) No. 565. Appeal from the Circuit Court of the United States for the Southern District of New York. Wallace Macfarlane, U. S. Atty. Comstock & Brown, for appellees. Dismissed on consent.

(79 Fed. 1005.)

THE VALENCIA et al. v. ZEIGLER et al. (Circuit Court of Appeals, Second Circuit.) Appeal from the District Court of the United States. F. R. Coudert and Jos. Kling, for appellants. W. W. Goodrich and J. A. Deady, for appellees. Certified to supreme court. See 17 Sup. Ct. 323.

(79 Fed. 1005.)

WAPLES-PLATTER CO. et al. v. TURNER. (Circuit Court of Appeals, Eighth Circuit. September 15, 1896.) No. 643. No opinion. Judgment of dismissal vacated and set aside, and cause restored to the docket.

Digitized by Google

(79 Fed. 1006.)

WEATHERBY v. ST. LOUIS & S. F. RY. CO. (Circuit Court of Appeals, Eighth Circuit. May 23, 1896.) No. 805. Error to the Circuit Court of the United States for the District of Kansas. L. F. Parker, for defendant in error. No opinion. Docketed and dismissed, pursuant to sixteenth rule, on motion of counsel for defendant in error.

(79 Fed. 1006.)

WILLIAMS et al. v. AMERICAN NAT. BANK OF KANSAS CITY, MO. (Circuit Court of Appeals, Eighth Circuit. May 25, 1896.) No. 726. Error to the Circuit Court of the United States for the Western District of Missouri. John R. Walker, James R. Vaughan, and W. M. Williams, for plaintiffs in error. O. H. Dean, R. L. Goode, and J. C. Cravens, for defendant in error. Dismissed, without costs to either party in this court, per stipulation of counsel.

(79 Fed. 1006.)

WILLIAMS v. GLENN. (Circuit Court of Appeals, Second Circuit.) No. 322. Appeal from the Circuit Court of the United States for the Southern District of New York. George Zabriskie, for appellant. B. N. Harrison, Charles Marshall, and A. H. Masten, for appellee. No opinion. Decree affirmed, with costs, on opinion in Furnald v. Glenn, 12 C. C. A. 27, 64 Fed. 49.

(79 Fed. 1006.)

WOERISHOEFFER et al. v. SMITH et al. (Circuit Court of Appeals, Fifth Circuit. January 6, 1897.) No. 514. Appeal from the Circuit Court of the United States for the Eastern District of Texas. S. R. Jones, for appellants. J. V. Lea, for appellees. Dismissed on stipulation.

(79 Fed. 1006.)

WOODFIN v. HAMPTON & O. P. RY. CO. et al. (Circuit Court of Appeals, Fourth Circuit. February 8, 1897.) No. 207. Appeal from the Circuit Court of the United States for the Eastern District of Virginia. Robert M. Hughes, for appellant. Arthur S. Segar and Thomas Tabb, for appellees. No opinion. Upon suggestion of the appellant that the case involves the question whether an act of the legislature of Virginia is in conflict with the constitution of the United States, and that this court has no jurisdiction, appeal is dismissed, without prejudice.

(79 Fed. 1006.)

ZIMMERMAN v. UNITED STATES. (Circuit Court of Appeals, Second Circuit. November 11, 1895.) No. 679. Appeal from the Circuit Court of the United States for the Southern District of New York. Hess, Townsend & McClelland, for appellant. Wallace Macfarlane, U. S. Atty. Dismissed on consent.

END OF CASES IN VOL. 24.

Digitized by Google

Digitized by Google

INDEX.

ACCIDENT INSURANCE.

See "Insurance," 5, 6.

ACCRETION.

Between wharves and shores, see "Wharves," 2.

ACTION.

Against United States, see "United States," 3.
Assignment of right of action, see "Assignments."
For causing death, see "Death," 1–3.
For collision, see "Collision," 4, 5.
Limitation, see "Limitation of Actions."
On indemnity bond, see "Indemnity"; "Insurance," 1.

Nature and form—Change of.
The distinction between actions at law and suits in equity in the United States courts is not one of form merely, but of vital substance, and a purely legal action cannot be converted into a suit in equity, or become entitled to be heard as such, by the answer of a defendant asserting equitable rights; but a defendant who has such rights, which he is entitled to enforce against the plaintiff, should resort to equity to arrest or stay the action at law.
—Owens v. Heidbreder, 78 Fed. 837.....24 C. C. A. 362

ADMIRALTY.

See, also, "Shipping."

Remedies—Force of state statutes.
In the exercise of their admiralty and maritime jurisdiction, the federal courts are governed solely by the legislation of congress and the general principles of the maritime law, and are not bound by state statutes. Accordingly, *held*, that in its determination of the question of the allowance of interest in a libel upon a contract of marine insurance, a court of admiralty is not to be guided by state statutes as to the method of ascertaining the proportions of a general average loss and as to the allowance of interest on contracts.
—New Zealand Ins. Co. v. Earnmoor S. S. Co., 79 Fed. 368.....
24 C. C. A. 644

ADMISSIONS.

As evidence of agency, see "Principal and Agent."

ADVANCEMENT.

See "Wills," 1.

ADVERSE POSSESSION.

1. Persons entitled to claim by prescription.
Possession of land, held by one who claims it only as heir of a deceased owner, and who, during the whole of such possession, is litigating with the administra-

Digitized by Google

tor of such deceased owner the validity of the administration, will not ripen into a title under statutes of limitation, good as against a purchaser from the administrator under an order of sale for payment of debts, made after the administrator's right is established; nor can the possession of one to whom the heir has conveyed pending the litigation, and who has knowledge of it, and of the nature of the heir's title, give any better right.

—Bowen v. Clymer, 79 Fed. 53.....24 C. C. A. 446

2. Color of title.

A tax deed, though void and based upon a void sale, if not showing invalidity on its face, is a sufficient color of title to be a foundation for adverse possession.

—Bartlett v. Ambrose, 78 Fed. 839.....24 C. C. A. 397

AMENDMENT.

Of bill of exceptions, see "Appeal and Error," 5.

APPEAL AND ERROR.

Review of findings of customs appraisers, see "Customs Duties," 3.

1. Decisions reviewable.

In a case in which a final decree would be appealable to the circuit court of appeals under sections 5 and 6 of the act of March 3, 1891, an appeal will lie to that court, under section 7, from an interlocutory decree granting an injunction, even though such appeal raises only the question of the lower court's jurisdiction.

—Lake Nat. Bank v. Wolfeborough Sav. Bank, 78 Fed. 517..... 24 C. C. A. 195

A writ of error or appeal cannot be taken to review the decision of the clerk upon a taxation of costs, though a decision of the court affirming or reversing a decision of the clerk upon an appeal taken pursuant to the rules of the circuit court may in some cases be so reviewed.

—Tyler Min. Co. v. Sweeney, 79 Fed. 277.....24 C. C. A. 578

A writ of error from the supreme court does not lie, by virtue of the last paragraph of section 6 of the circuit court of appeals act, to review a judgment of the circuit court of appeals which is not a final judgment.

—MacLeod v. Graven, 79 Fed. 84.....24 C. C. A. 449

An order which grants certain relief upon the party's complying with conditions specified in the order, and provides that, if the conditions are not complied with, the relief shall be denied, is not a final decree, and is not appealable.

—Stratton v. Dewey, 79 Fed. 32.....24 C. C. A. 435

An order entered in the original cause, reviving the suit in the name of complainant's administrator, is not a final appealable decree.

—Mackaye v. Mallory, 79 Fed. 1.....24 C. C. A. 420

Though the allowance or denial of an application to intervene in a suit rests in the discretion of the court, and no appeal can be taken from an order on such an application, when an order has been made admitting a party, though with leave reserved to others to move to strike out his pleadings, and on such motion an order is made denying the right to intervene or plead, such latter order, being, in effect, a dismissal of the party from the cause, is appealable as a final decree.

—Hamlin v. Toledo, St. L. & K. C. R. Co., 78 Fed. 664..24 C. C. A. 271

A decree dissolving a partnership, enjoining, "until the final decree in this suit," both parties from disposing of the partnership property, directing that testimony be taken before a commissioner as to moneys claimed to have been

Digitized by Google

advanced to the partnership by complainant, and that costs shall "abide the further and final decree of this court," is not a final, appealable decree.
—Ries v. Henderson, 78 Fed. 515.....24 C. C. A. 194

Whether an appeal lies from an order dismissing, without prejudice, an application for an injunction, quære.
—Fidelity Insurance, Trust & Safe-Deposit Co. v. Dickson, 78 Fed. 205.. 24 C. C. A. 60

An appeal, taken to the circuit court of appeals from a decree of the circuit court entered in accordance with the mandate of the former court upon a previous appeal, will be dismissed, even though an appeal lie to the supreme court from the decision of the circuit court of appeals.
—Merrill v. National Bank of Jacksonville, 78 Fed. 208..24 C. C. A. 63

In a decree which appoints a receiver for a corporation, orders its officers to deliver the property into the receiver's hands, and enjoins them from interfering further with it, the injunction, while incidental to the appointment of the receiver, is not merely nominal, but forms a substantial part of the decree, and is therefore appealable. Such an appeal, however, raises only the question whether, assuming the receiver to have been properly appointed, the injunction was improvidently granted.
—Lake Nat. Bank v. Wolfeborough Sav. Bank, 78 Fed. 517..... 24 C. C. A. 195

2. Presentation and reservation in lower court of grounds of review.
Exceptions to instructions taken after the jury had retired will not be considered on appeal. Park Bros. & Co. v. Bushnell, 9 C. C. A. 140, 60 Fed. 583, followed.
—Commercial Travelers' Mut. Acc. Ass'n of America v. Fulton, 79 Fed. 423.....24 C. C. A. 654

Exceptions to a charge to the jury, not taken until after the jury has retired, will not be noticed on appeal, especially where the objections to the charge are of such a nature that they might have been remedied had the court's attention been called to them at the proper time.
—New England Furniture & Carpet Co. v. Catholicon Co., 79 Fed. 294.. 24 C. C. A. 595

An exception taken in gross to the refusal of a long series of instructions is of no avail in an appellate court, if some of such instructions were clearly erroneous, and ought not to have been given.
—New England Furniture & Carpet Co. v. Catholicon Co., 79 Fed. 294.. 24 C. C. A. 595

3. Parties.
All the parties to a suit or proceeding who appear from the record to have an interest in an order, judgment, or decree challenged in an appellate court must be given an opportunity to be heard there, before such court will proceed to a decision upon the merits of the case; and an appeal taken by one party only, without citation to or appearance by another party interested in the decree, will be dismissed.
—Dodson v. Fletcher, 78 Fed. 214.....24 C. C. A. 69

All parties to the record who appear to have an interest in a decree or order challenged by appeal must be given an opportunity to be heard on such appeal, but when it appears by the record that one of several parties jointly interested in a proceeding has been notified in writing to appear, and has failed to do so, or, if appearing, has refused to join, or where it otherwise conclusively appears by the record that such a party has had knowledge of and refused to join in an appeal, the appeal taken by another party alone may proceed without him.
—Farmers' Loan & Trust Co. v. McClure, 78 Fed. 211....24 C. C. A. 66

4. Requisites and proceedings for transfer of cause.
When the circuit court has made an order allowing an appeal on behalf of a party upon an erroneous appearance of counsel or under a mistake of fact, it may and should, upon learning the truth, vacate such order.
—Farmers' Loan & Trust Co. v. McClure, 78 Fed. 211....24 C. C. A. 66

Digitized by Google

It is not competent for parties to confer jurisdiction on the circuit court of appeals to review a judgment, six months after the judgment or decree sought to be reviewed was entered, by the voluntary appearance of necessary parties to the appeal. Accordingly, *held*, that an order of dismissal of an appeal, for want of necessary parties, would not be vacated, upon their admission of service of the citation and entry of appearance.

—Dodson v. Fletcher, 79 Fed. 129.....24 C. C. A. 466

A writ of error, which has been allowed, served, and returned to the appellate court with the transcript of the proceedings in the trial court, will not be dismissed because the clerk of the trial court has inadvertently failed to make an indorsement of its filing on the writ itself. Insurance Co. v. Phinney, 22 C. C. A. 425, 76 Fed. 617, disapproved.

—United States Nat. Bank v. First Nat. Bank, 79 Fed. 296..... 24 C. C. A. 597

5. Record and proceedings not in record.

Where there is no bill of exceptions in a case tried by the court, only the sufficiency of the facts found to support the judgment can be considered on error.

—Flagler v. Kidd, 78 Fed. 341.....24 C. C. A. 123

The circuit court of appeals will not review the action of a trial court in failing to direct a verdict for a plaintiff or defendant on issues of fact or on a mixed issue of law and fact, unless the bill of exceptions affirmatively shows that it contains all the evidence.

—Denver & R. G. R. Co. v. Lorentzen, 79 Fed. 291....24 C. C. A. 592

An appellate court will not make an order authorizing the court below to amend the bill of exceptions so as to show whether or not it contains all the evidence produced at the trial; for, if the amendment be to make the record speak the truth, when by mistake it speaks an untruth, then the court below has authority to allow it, without permission, notwithstanding the lapse of the term; and, if it be not of that character, the power to make it is gone, and cannot be restored by any action of the appellate court.

—Rollins v. Board of Com'rs of Gunnison County, Colo., 78 Fed. 741.... 24 C. C. A. 298

In reviewing a decision sustaining a demurrer to a plea which alleges that a judgment set up in bar of the action was rendered upon due and proper notice, and that the court had and acquired jurisdiction of the subject-matter and the parties, the appellate court must take such allegations as true, and cannot look into exhibits attached to the answer in the case to ascertain whether the judgment does in fact show all the elements of jurisdiction.

—Merritt v. American Steel-Barge Co., 79 Fed. 228....24 C. C. A. 530

Findings of fact will not be reviewed where the evidence is not in the record.

—United States v. Ferguson, 78 Fed. 103.....24 C. C. A. 1

6. Assignment of errors.

General assignments that the court erred in rendering judgment against the defendant, and in not rendering judgment in his favor, cannot be considered.

—United States v. Ferguson, 78 Fed. 103.....24 C. C. A. 1

An assignment that the court erred in allowing certain claims, which the evidence adduced by libelant did not substantiate, is too general to be considered.

—The Natchez, 78 Fed. 183; New Orleans Nav. Co. v. St. Louis & N. O. Anchor Line, Id.....24 C. C. A. 49

The rule that assignments pointing out no particular error will not be reviewed may be disregarded in case of plain error where the merits have been fully considered below, and discussed in the brief of one of the parties.

—Flagler v. Kidd, 78 Fed. 341.....24 C. C. A. 123

Under the discretion reserved in rule 11 of the circuit court of appeals (21 C. C. A. cxii., 78 Fed. cxii.), as to noticing errors not assigned, if an assignment which does not comply with the rule has any sound merit in it, and the court can be satisfied from the whole record that a probable injustice has been done, it will

Digitized by Google

be disposed to notice the error so defectively assigned; but, if the error complained of is highly technical, the record indicating no probable injustice, the court will not incline to leniency in the enforcement of the rule, though, if the error had been correctly assigned, it might have felt constrained to reverse the judgment because of it.
—National Acc. Soc. v. Spiro, 78 Fed. 774.....24 C. C. A. 334

7. Dismissal.
An appellant cannot of right dismiss his own appeal; and, when an appeal is dismissed on his motion, he is not entitled, in the absence of special equitable considerations, to have the order expressed to be without prejudice; but where an appeal from an interlocutory order granting a preliminary injunction was so dismissed, the order may state the fact that the dismissal was before any hearing on the merits.
—Donallan v. Tannage Patent Co., 79 Fed. 385.....24 C. C. A. 647

8. Review—Scope and extent in general.
The assembling of a prayer for an unnecessary injunction with a prayer for modification of a decree or order will not warrant a review of the decree or order, when a direct appeal therefrom is unauthorized by law.
—Fidelity Insurance, Trust & Safe-Deposit Co. v. Dickson, 78 Fed. 205.. 24 C. C. A. 60

9. —— Discretion of lower court.
The award of costs in equity cases rests in the sound discretion of the trial court, and will not be disturbed by an appellate court except in cases of manifest abuse of such discretion. Accordingly, *held*, in this case, that no sufficient reason appeared for disturbing the decision of the trial court refusing to award costs against a successful defendant, on the ground that it was the real party in interest behind two other defendants, who were unsuccessful.
—Tyler Min. Co. v. Sweeney, 79 Fed. 277.....24 C. C. A. 578

The refusal of a new trial is not assignable as error in the federal court.
—The Natchez, 78 Fed. 183; New Orleans Nav. Co. v. St. Louis & N. O. Anchor Line, Id.....24 C. C. A. 49

When a trial court, upon a motion for a new trial, refuses to consider a ground urged therefor, or to exercise its discretion, for the reason that it considers it has no power to do so, such refusal may be assigned as error. Mattox v. U. S., 13 Sup. Ct. 50, 146 U. S. 140, followed.
—Felton v. Spiro, 78 Fed. 576.....24 C. C. A. 321

An appellate court will not interfere with the exercise of the discretion of a chancellor in refusing to dissolve an injunction, either absolutely or upon condition of giving security, unless there is manifest error in the conclusion reached by him.
—Ritter v. Ulman, 78 Fed. 222.....24 C. C. A. 71

An appeal from a mere decree for costs of the court below must be dismissed, as a matter within that court's discretion. But, where one item included in the decree is for clerk's fees in making and certifying the transcript on a former appeal, the appellate court may review the same on the merits.
—Blanks v. Klein, 78 Fed. 395; Starcke v. Klein, Id.....24 C. C. A. 144

10. —— Questions of fact, verdicts and findings.
When a case has been tried by the court without a jury, pursuant to stipulation, under Rev. St. § 700, the circuit court of appeals will not make inquiry as to the correctness of special findings of fact made by the trial court. City of Key West v. Baer, 13 C. C. A. 572, 66 Fed. 440, followed.
—White v. Thacker, 78 Fed. 862.....24 C. C. A. 374

The circuit court of appeals cannot set aside a general verdict on the ground that it was against the weight of evidence, or upon a guess as to the mental processes by which the jury reach the conclusion expressed therein.
—Coloritype Co. v. Williams, 78 Fed. 450.....24 C. C. A. 163

When a question of the value of the services of a solicitor, rendered in a suit for the foreclosure of a mortgage, has been decided, upon conflicting evi-

Digitized by Google

dence, by the court in which the suit is pending, and which is familiar with the proceedings therein and the amount of services rendered, such decision will not be disturbed by an appellate court, in the absence of an obvious error of law, or a serious and important mistake in the consideration of the evidence.
—Farmers' Loan & Trust Co. v. McClure, 78 Fed. 209....24 C. C. A. 64

11. —— Harmless error.
A lease of part of a building then in course of construction required "it to be fireproof." In an action for rent, etc., where defendant set up that the building was not fireproof, plaintiff, who was an architect, testifying in his own behalf, after describing the construction of the building in this respect, was allowed to state that "that mode of construction is commonly called fireproof" in his profession. *Held*, that if this was error, it was rendered harmless by the subsequent introduction of the building law containing the definition of a fireproof building, together with evidence by the plaintiff, without objection or contradiction, that the building was so constructed.
—Coloritype Co. v. Williams, 78 Fed. 450.....24 C. C. A. 163

12. Reversal—Form of order.
A judgment of reversal based solely on the ground that the trial court erred in not exercising its discretion on a motion for new trial requires, not the ordering of a new trial, but only a remanding of the case, for further proceedings from the point where the error was committed. In this case the direction to the trial court should be to consider and decide the motion for new trial.
—Felton v. Spiro, 78 Fed. 576.....24 C. C. A. 321

APPEARANCE.

Effect of erroneous appearance, see "Appeal and Error," 4.

ASSIGNMENTS.

Of claim against United States, see "United States," 2.
Of invention or patent, see "Patents," 5.

Operation and effect.
A written order to an officer to pay to a third party money belonging to the drawer, but retained by the officer without authority, is an assignment of the right of action to recover it.
—United States v. Ferguson, 78 Fed. 103.....24 C. C. A. 1

ASSIGNMENTS OF ERROR.

See "Appeal and Error," 6.

ASSUMPTION.

Of risks, see "Master and Servant," 4.

ATTORNEY AND CLIENT.

Review of question of value of solicitor's services, see "Appeal and Error," 10.

AVERAGE.

See "Shipping," 6.

Digitized by Google

BANKS AND BANKING.

1. Functions and dealings—In general.

A rediscount by a bank of its bills receivable, though it indorses the same, and becomes contingently liable for their payment, is not a borrowing of money by the bank, but has more the characteristics of a sale.

—United States Nat. Bank v. First Nat. Bank, 79 Fed. 296..... 24 C. C. A. 597

2. —— Representation of bank by officers.

It is within the scope of the implied powers of the president of a bank to indorse negotiable paper in the ordinary transaction of the bank's business, and a special authority to that end need not be conferred by the board of directors.

—United States Nat. Bank v. First Nat. Bank, 79 Fed. 296..... 24 C. C. A. 597

When the directors of a bank have known for many months that its paper was being rediscounted in large amounts, under the president's direction, and without consulting the board, and that the money so obtained was being used in the business of the bank, and they have made no inquiry as to how the paper was indorsed, the bank is estopped to dispute the authority of the president to indorse such paper for rediscount.

—United States Nat. Bank v. First Nat. Bank, 79 Fed. 296..... 24 C. C. A. 597

When a bank has long been in the habit of rediscounting its bills receivable in large amounts, all other banks in the same locality pursuing the same practice, and the president and cashier of such bank propose to its regular correspondent a rediscount of its bills, and there are no circumstances attending such proposal to arouse suspicion, the bank to which it is made may safely act upon it, without further inquiry, on the assumption that the act has either been specially authorized, or that the officers are acting within the purview of their general powers.

—United States Nat. Bank v. First Nat. Bank, 79 Fed. 296..... 24 C. C. A. 597

In an action of deceit against the directors of a bank for making false statements as to its condition, whereby the plaintiff was induced to leave in the bank a deposit, previously made, which was lost by the failure of the bank, it is not sufficient to allege that the plaintiff was induced to remain a depositor by the statements so made, but it must be directly averred that, but for such statements, he would have withdrawn his deposits before the failure of the bank.

—Brady v. Evans, 78 Fed. 558.....24 C. C. A. 236

3. National banks—Liability of stockholder for debts of bank.

The liability of a shareholder in a national bank to an assessment on his shares is not a contractual liability flowing from his acquisition of the shares, but a liability which arises by force of the statute authorizing the assessment.

—First Nat. Bank v. Hawkins, 79 Fed. 51.....24 C. C. A. 444

It is not necessary, in order to hold liable for an assessment upon the shareholders of an insolvent national bank one who has transferred his stock to an irresponsible person, to show that the transferror had actual knowledge of the insolvency of the bank at the time of the transfer, but it is sufficient if he had good ground to apprehend its failure, and made the transfer with intent to relieve himself from individual liability.

—Cox v. Montague, 78 Fed. 845.....24 C. C. A. 364

L., a stockholder in the D. national bank, transferred his stock, shortly before its failure, to his married daughter and other minor children. It appeared from the circumstances surrounding the transaction that L., though perhaps not supposing the D. bank to be actually insolvent, was advised of facts, not generally known, which indicated such uncertainty as to its ability to stand a run, which had apparently begun, as to make it safer for him to dispose of his stock forthwith, and that the transfer was

Digitized by Google

made with the intent that, if all came out well, his children should have the stock, while, if the bank met with disaster, he would not be obliged to throw good money after bad. *Held*, that the transfer so made could not stand against the creditors of the bank, and L. was liable, at the suit of its receiver, for an assessment on the stock.

—Foster v. Lincoln's Ex'r, 79 Fed. 170.....24 C. C. A. 470

4. —— Acts ultra vires—Estoppel.

A national bank which has purchased from a third party shares of stock in another national bank as an investment, and which appears on the books of the latter bank as a stockholder, is estopped, after the latter's failure, to deny liability to an assessment on the stock on the ground that its purchase thereof was ultra vires.

—First Nat. Bank v. Hawkins, 79 Fed. 51.....24 C. C. A. 444

5. —— Insolvency and receivers.

The holder of a judgment against an insolvent national bank, recovered upon a claim rejected by its receiver, has an adequate remedy by an action at law against the receiver, by the judgment in which the latter may be directed to recognize the claim, and he cannot resort to equity to compel the allowance of the claim by the receiver, or enjoin its rejection.

—Denton v. Baker, 79 Fed. 189.....24 C. C. A. 476

While the receiver of an insolvent national bank may interpose and become a party to a suit to enforce a claim against the bank, he is not a necessary party to such a suit, and a judgment rendered against the bank by a court of competent jurisdiction, in a suit to which he is not a party, is binding upon the receiver, in the absence of fraud or collusion.

—Denton v. Baker, 79 Fed. 189.....24 C. C. A. 476

BILLS AND NOTES.

Bona fide purchasers.

The fact that a purchaser, for valuable consideration, of negotiable notes, from a member of the payee firm, who claims to be the owner thereof, knows that the latter is the president of a bank whose indorsement in blank appears on the notes, after the indorsement of the firm, is not sufficient to put the purchaser on inquiry, or charge him with notice that the notes belong to the bank.

—Kaiser v. First Nat. Bank, 78 Fed. 281.....24 C. C. A. 88

One who was president both of the A. Bank and the B. Bank received from the president of a third bank two notes, which the latter claimed to own individually, as collateral both for balances due from his bank to the A. Bank, and for debts due by him individually to the B. Bank. The notes were kept by the A. Bank until dishonored, and until its own balances were discharged, and were then sent to the B. Bank. *Held*, that the fact that the B. Bank received physical possession of the notes after dishonor was no evidence that it was not a bona fide holder for value.

—Kaiser v. First Nat. Bank, 78 Fed. 281.....24 C. C. A. 88

BONA FIDE PURCHASERS.

Of homestead lands, see "Homestead."
Of notes, see "Bills and Notes."

BONDS.

Of administrators, see "Executors and Administrators."
Of agent of foreign corporations, see "Corporations," 6.
Of indemnity, see "Indemnity"; "Insurance," 1.
Of towns, see "Towns."

Validity—Formal requisites.

It makes no difference in what form an obligor signs a bond, if it appears that the purpose was to bind himself. And where the name of a corpora-

Digitized by Google

tion, the principal in a bond, appeared in full in the body of the bond, and its seal was impressed opposite the attestation clause, between the obligatory part and the condition, and at the close of the whole instrument the names of the president and secretary were signed, this being its customary method of executing sealed instruments, it is binding; and the surety cannot complain that the bond was not executed by the principal, especially where it recognized the signature as sufficient by signing right below it.
—Union Guaranty & Trust Co. v. Robinson, 79 Fed. 420..24 C. C. A. 650

CARRIERS.

See, also, "Shipping," 1, 5, 6.

Connecting carriers—Liability for delay.
Where a carrier had undertaken to transport goods of a shipper from one point to another, the fact that a delay in their delivery was caused by the fault of another carrier, who has no contractual relation with the shipper, but who had contracted with the first carrier to carry the goods a part of the distance, is no defense to an action against the first carrier for damages for the delay.
—St. Louis, I. M. & S. Ry. Co. v. Edwards, 78 Fed. 745..24 C. C. A. 300

CHARTER PARTY.

See "Shipping," 1.

CIRCUIT COURT.

See "Courts," 2, 3.

CIRCUIT COURTS OF APPEALS.

Jurisdiction on appeal, see "Appeal and Error," 1, 4.

CLAIMS.

Against United States, see "United States," 2.

CLERKS OF COURTS.

Liability for neglect to issue process.
Where it is by law made the duty of the clerk of a court, upon the filing of a præcipe by the moving party in an action, to issue process to the sheriff, whose duty it is to serve the same, and return it to the clerk, who is then to receive and record the return, it is not a defense to an action against the clerk, for neglect and default in issuing process upon a præcipe, that the plaintiff did not give attention to the clerk's performance of his duty, and see to it that it had been performed.
—Baltimore & O. R. Co. v. Weedon, 78 Fed. 584.....24 C. C. A. 249

In an action against the clerk of a court for failing to issue process in error to review a judgment against the plaintiff, when legally required to do so by proper proceedings on the plaintiff's part, the measure of damages is, prima facie, the amount of the judgment which the plaintiff has been obliged to pay, but the defendant may show, in mitigation of damages, that, even if the plaintiff had had an opportunity to review the judgment, he would have been unable to reduce the recovery against him.
—Baltimore & O. R. Co. v. Weedon, 78 Fed. 584.....24 C. C. A. 249

COLLISION.

1. Vessels in tow.
The steamer W., with a barge, A., in tow, was proceeding, at night, up a narrow channel, and met the steamer C., coming down the channel, also with

Digitized by Google

a tow. The steamers were approaching nearly head on, at a combined speed of about 10 miles an hour. At about the time they met, the barge A. took a sharp sheer across the channel and across the course of the C. The W. did not stop nor throw off her tow line when the sheer began, nor until the C. had about passed her. *Held*, that she was in fault in not doing so, and was responsible for the ensuing collision between the A. and the C. and her tow.

—The F. W. Wheeler v. Churchill, 78 Fed. 824.....24 C. C. A. 353

Held, further, that inasmuch as the A., if properly manned, equipped, and navigated, would have taken no such sheer into the course of the C., she would be held, in the absence of explanation, to be in fault, and also liable for the collision.

—The F. W. Wheeler v. Churchill, 78 Fed. 824.....24 C. C. A. 353

Held, further, that it was at most an error in extremis (for which she was not responsible) for the C., instead of stopping or reversing, while coming down with a current with a tow behind her, to put on steam, in an effort to avoid collision with the A. by crossing her bows.

—The F. W. Wheeler v. Churchill, 78 Fed. 824.....24 C. C. A. 353

A steamer, with tows lashed to her side, and a tug aiding her on a hawser ahead, after passing up the eastern side of Blackwell's Island, with a flood tide of about five miles an hour, turned to cross the head of the island, to make a landing at Eighty-Sixth street, New York. In so doing, they attempted to cross the bows of a small tug, with two heavy tows, which was coming up the west side of the island, and which failed to hear their first signal. A collision resulted, causing the loss of a tow. *Held*, that the first-mentioned steamer and tug were guilty of contributory fault, in failing to observe that the other tug would be unable to check her tows sufficiently in the strong tide to pass behind them, and in not keeping further away and allowing a wider margin of safety.

—Legg v. The Titan, 79 Fed. 117.....24 C. C. A. 464

As the ferryboat C. was leaving her New York slip near a long covered pier which obstructed the view above, the tug G. having the S. S. Alvena, 275 feet long, in tow astern upon a hawser 175 feet long, suddenly appeared near the mouth of the slip. On very conflicting testimony as to the distance of the collision from the end of the pier. *Held*, that the tugs were in fault for navigating with an unwieldy tow so near the slip without excuse; and that the ferryboat was proceeding along the covered pier at moderate speed, and having reversed as soon as she was aware of the presence of the tow behind the tug was without fault.

—Atlas S. S. Co. v. The Chicago, 78 Fed. 924; Pennsylvania R. Co. v. The Alvena, Id.....24 C. C. A. 411

2. Signals—Effect of failure to give or answer.

A vessel which fails to get an answer to her signals is not justified, though she have the right of way, in continuing onward until the danger point is reached. Her duty, especially in a crowded harbor, and when approaching a tug incumbered with a tow, is to take every care to avoid a course involving risk of collision.

—The City of Chester, 78 Fed. 186; Thom v. Norfolk & C. R. Co., Id.... 24 C. C. A. 51

It is no excuse for failure to answer a signal that the vessel for which it was intended heard it, but did not understand that it was for her, other vessels being in the vicinity. It is her duty to understand and heed such signals, especially when the vessel giving them is on converging courses with her, on her starboard bow, and has the right of way.

—The City of Chester, 78 Fed. 186; Thom v. Norfolk & C. R. Co., Id.... 24 C. C. A. 51

A steamboat with a tow projecting in front was proceeding up Norfolk Harbor, near the Norfolk side, and was under engagement, by signal, with a tug and tow coming down outside of her. Another tug, crossing from the Portsmouth side to reach a wharf, blew two signals of one blast each, which were heard by the steamboat, but not answered, because supposed to be for another vessel. The tug, nevertheless, continued her course, crossed in front

Digitized by Google

of the descending tug, and struck the steamboat's tow. *Held*, that both steamboat and tug were in fault, the former for failing to understand and heed the signal, and the latter for proceeding after failing to get an answer.
—The City of Chester, 78 Fed. 186; Thom v. Norfolk & C. R. Co., Id.... 24 C. C. A. 51

If a steamer which, with the barge in her tow, is aground in a channel, and unable to move, shows the lights prescribed for vessels under way, and, upon the approach of another vessel, responds to signals in a way to indicate that she will keep out of the other vessel's way, and gives no warning of the danger of the actual situation, she is in fault, and responsible for damage ensuing.
—The F. W. Wheeler v. Churchill, 78 Fed. 824.....24 C. C. A. 353

A steamship which, on approaching another steamer lying or moving in a narrow harbor channel, fails to get any answer to her signals, should have her attention arrested thereby, and is bound to take every precaution to avoid risk of collision, even from the negligence of the other.
—The Bowden v. The Decatur H. Miller, 78 Fed. 649....24 C. C. A. 267

3. Lookouts.
A steamship without steam up, which has been moved from her dock, and is lying in the channel of a narrow harbor, while her tug is preparing to tow her, is in fault if she fails to maintain a lookout for approaching vessels, so as to apprise them of her helpless condition.
—The Bowden v. The Decatur H. Miller, 78 Fed. 649....24 C. C. A. 267

4. Suits for damages—Evidence.
In cases of conflict as to the movements of vessels, superior weight, other things being equal, is to be given to the testimony of witnesses as to the movements of their own vessel over that of witnesses on other moving vessels.
—The Natchez, 78 Fed. 183; New Orleans Nav. Co. v. St. Louis & N. O. Anchor Line, Id.....24 C. C. A. 49

5. —— Damages.
In cases of collision, where damages are given for detention, interest may be allowed thereon as part of such damage.
—The Natchez, 78 Fed. 183; New Orleans Nav. Co. v. St. Louis & N. O. Anchor Line, Id.....24 C. C. A. 49

CONNECTING CARRIERS.

See "Carriers."

CONSTITUTIONAL LAW.

Title of acts, see "Statutes."

CONTRACTS.

For services, see "Master and Servant," 1.
In relation to patents, see "Patents," 5.
Of bank, see "Banks and Banking," 2.
Of insurance, see "Insurance."
Of sale and purchase, see "Sales."

Construction—General rules.
A party must be deemed to have assented to a contract in the sense which he knew the other party intended it to signify, if the language employed is capable of that meaning.
—Cowles Electric Smelting & Aluminum Co. v. Lowrey, 79 Fed. 331.... 24 C. C. A. 616

A contract is to be construed in strict accordance with grammatical rules, unless there are circumstances requiring a departure therefrom. But the grammatical rule raises only a prima facie presumption, and does not preclude the settling of the meaning by detracting somewhat from the exact-

Digitized by Google

ness of the language, to give effect to more cogent reasons of a different kind. Thus, plural language may be held to include the singular also.
—Cowles Electric Smelting & Aluminum Co. v. Lowrey, 79 Fed. 331.... 24 C. C. A. 616

The subsequent conduct of the parties may sometimes be resorted to, to aid in the construction of their contract, but can only be considered when the contract, read in the light of surrounding facts, leaves its meaning in doubt; and, if the subsequent action of the parties gives nearly equal ground for opposite conclusions, no aid is to be derived therefrom.
—Cowles Electric Smelting & Aluminum Co. v. Lowrey, 79 Fed. 331.... 24 C. C. A. 616

Evidence of the situation of the parties, the subject-matter of the contract, and the circumstances under which it was entered into cannot authorize a construction which would make it conform to what the parties may have secretly intended, but failed to express, but only to explain the terms actually employed, if the language is of obscure or doubtful meaning.
—Standard Sewing-Mach. Co. v. Leslie, 78 Fed. 325.....24 C. C. A. 107

CONVERSION.

See "Trover and Conversion."

CORPORATIONS.

See, also, "Banks and Banking"; "Railroads."
Jurisdiction of action to establish lien on certificate of stock, see "Courts," 1.

1. Capital stock—Increase.
When the charter of a corporation or the general law under which it is incorporated does not impose any limitation upon the amount of capital which the incorporators may venture in the business, nor require the amount of the capital to be stated in the certificate of organization, but such corporation is given power to fix by by-laws the amount of capital, the rule that there can be no implied power to increase the capital of a corporation, fixed by the charter or articles of incorporation at a definite sum, has no application; and an increase of capital, by an amendment of the by-law fixing it, is valid, and a subscriber to such increase is bound.
—Peck v. Elliott, 79 Fed. 10.....24 C. C. A. 425

The provisions of section 5 of the Tennessee act of March 23, 1875 (Laws Tenn. 1875, c. 142), by which an increase of stock of a corporation is permitted by the action of the stockholders, were not repealed by the act of March 27, 1883 (Laws Tenn. 1883, c. 163).
—Peck v. Elliott, 79 Fed. 10.....24 C. C. A. 425

One who has accepted increased stock of a corporation, and has taken the office of president of such corporation by virtue alone of such stock, is estopped to question its validity, on the ground of the nonpayment of a tax required to be paid by the corporation on increasing its stock.
—Peck v. Elliott, 79 Fed. 10.....24 C. C. A. 425

When a statute requires the payment of a tax by a corporation upon increasing its capital stock, and makes its payment a condition precedent to the exercise of corporate powers, a court, in a suit involving the validity of such an increase of stock, will presume, in the absence of proof to the contrary, that the tax has been paid.
—Peck v. Elliott, 79 Fed. 10.....24 C. C. A. 425

2. —— Subscription to stock.
Where increased stock of a corporation is required by the terms of the authority for the increase to be sold at par, and the corporation buys from a subscriber to the increase a patent of no value to it, for the purpose of allowing the subscriber to get his stock below par by crediting the purchase

Digitized by Google

price on his subscription, and afterwards resells the patent to him for a nominal sum, such transaction, being a mere evasion of the requirements of the issue of the stock, does not entitle the subscriber to any credit on his subscription.
—Peck v. Elliott, 79 Fed. 10.....24 C. C. A. 425

3. Stockholders—Liability for corporate debts.
A stockholder who is also a creditor of a corporation has no right to set off the debt of the corporation to him as against his unpaid subscription, after the corporation has become insolvent, and a suit in equity has been brought to wind up its affairs and distribute its assets, even though such debt arises upon an accommodation note given by him to the corporation because of his subscription, and to avoid an assessment on his stock. Bausman v. Denny, 73 Fed. 69, reversed.
—Bausman v. Kinnear, 79 Fed. 172.....24 C. C. A. 473

4. Insolvency—Preferences.
When the majority of the stockholders of a corporation, combining together, or an individual or corporation holding a controlling interest in the stock, select a body of directors to carry out a predetermined scheme of corporate action, they practically constitute themselves the corporation for that object, and assume the fiduciary relations which the directors themselves occupy; and, if the corporation is insolvent, this trust relation towards creditors forbids the majority stockholders or stockholder from appropriating for their own advantage the property in which all have a community of interest.
—Sidell v. Missouri Pac. Ry. Co., 78 Fed. 724.....24 C. C. A. 216

5. Dissolution—Action for winding up corporation.
Holders of preferred nonvoting stock of a corporation, the certificates of which recite that it is a lien on the company's property, and entitled to interest payable only out of net earnings, and not to accumulate, are not creditors of the company, but stockholders, entitled to a preference over common stockholders as to dividends and capital, and, as such, are proper parties to a suit for the winding up of the corporation.
—Hamlin v. Toledo, St. L. & K. C. R. Co., 78 Fed. 664..24 C. C. A. 271

6. Foreign corporations—Special statutory provisions.
A surety bond taken as security for the conduct of an agent of a foreign corporation which undertakes to do business in Pennsylvania without complying with the requirement of the second section of Act April 22, 1874, that a statement showing the title and object of the corporation, the location of its officers, and names of its agents, etc., shall be filed in the office of the secretary of the commonwealth, is invalid. 74 Fed. 597, affirmed. Thorne v. Insurance Co., 80 Pa. St. 15, and Johnson v. Hulings, 103 Pa. St. 498, followed.
—McCanna & Fraser Co. v. Citizens' Trust & Surety Co., 76 Fed. 420.. 24 C. C. A. 11

COSTS.

Review, see "Appeal and Error," 1, 9.

COURTS.

See, also, "Admiralty"; "Clerks of Courts"; "Equity."
Binding force of local laws, see "Master and Servant." 2.

1. Extent of jurisdiction in general—State courts.
Though certificates of corporate stock are technically only written evidences of interests in the corporate property, they are so far in the nature of chattels that, when certificates of stock in a corporation of one state are held in pledge or as collateral in another state, the courts of such latter

Digitized by Google

state are authorized to proceed to establish a lien thereon in a suit commenced by substituted service, under a statute authorizing such service in suits to establish liens on personal property within the state.

—Merritt v. American Steel-Barge Co., 79 Fed. 228..24 C. C. A. 530

2. United States courts—Jurisdiction dependent on nature of subject-matter.

Under the provision in the judiciary act of 1887–88, that "the provisions of this section" shall not affect the jurisdiction of the circuit courts in cases for "winding up the affairs" of any national bank, the circuit courts have at least concurrent jurisdiction (whether exclusive or not is not decided) with the state courts in cases of that kind, without regard to the citizenship of the parties.

—Lake Nat. Bank v. Wolfeborough Sav. Bank, 78 Fed. 517..... 24 C. C. A. 195

3. —— Jurisdiction dependent on citizenship.

The fact that the circuit court has possession of all the assets of an insolvent corporation, for the purpose of winding up its affairs, in a suit pending in such court, gives it jurisdiction to entertain a petition, ancillary to such suit, against a debtor of the corporation, to ascertain and enforce payment of his debt, without regard to the citizenship of the parties or the amount in controversy.

—Peck v. Elliott, 79 Fed. 10.....24 C. C. A. 425

The possession by the court, in which a foreclosure suit is pending, of the fund applicable to the payment of the bonds secured by the mortgage under foreclosure, is sufficient to authorize it to entertain the petition of the claimants, asserting a mortgage lien upon such bonds.

—Central Trust Co. v. Carter, 78 Fed. 225.....24 C. C. A. 73

B. and others filed intervening petitions, in suits pending in the United States circuit court for the winding up of certain railroad properties, claiming a fund in the hands of the C. Trust Co. *Held* that, notwithstanding B. and his associates and the C. Trust Co. were citizens of the same state, as the making of the order sought for was properly incident to granting full relief in the pending suits, and as the C. Trust Co. was a mere depositary of the fund, having no valid claim against it, the court had jurisdiction to direct payment of the fund to B. and his associates.

—Central Trust Co. of New York v. Benedict, 78 Fed. 198..... 24 C. C. A. 56

A testamentary trustee, or a special guardian appointed under a state statute for the sale of infants' land, suing in either capacity, is not a mere guardian ad litem or next friend; and the federal courts have jurisdiction of a suit brought by him against a citizen of a state other than his own.

—Pennington v. Smith, 78 Fed. 399.....24 C. C. A. 145

4. Concurrent and conflicting jurisdiction and comity.

While, in cases in which a court has taken, or, in order to administer the relief sought, may be compelled to take, possession of specific real or personal property to which the suit relates, the court which first acquires jurisdiction of the cause is entitled to retain it, to the exclusion of any other court, this rule does not apply to suits merely in personam, though involving the same issues; and the pendency of such a suit in one jurisdiction does not prevent a party thereto from bringing a similar suit, involving the same issues, against the other party, in another jurisdiction.

—Merritt v. American Steel-Barge Co., 79 Fed. 228....24 C. C. A. 530

A state court appointed a receiver of a national bank, but he never obtained possession of its property. The original complainant discontinued, and the defendant filed a motion to dismiss, but no formal order of dismissal was entered. *Held*, that the pendency of the suit in that condition was no bar to a subsequent suit between the same parties in a federal court for the appointment of a receiver, etc.

—Lake Nat. Bank v. Wolfeborough Sav. Bank, 78 Fed. 517..... 24 C. C. A. 195

Digitized by Google

A court will not go behind an account settled by an orphans' court for one purpose and not for all, but will apply the rule that the adjudication of a competent court will be accepted as a settlement of the questions before it.
—Pennington v. Smith, 78 Fed. 399.....24 C. C. A. 145

CUSTOMS DUTIES.

1. Construction of custom laws in general.
In tariff laws, words of classification are, in general, to be construed either in their common or their commercial meaning, as opposed to their scientific or technical sense.
—United States v. Buffalo Natural Gas Fuel Co., 78 Fed. 110..... 24 C. C. A. 4

When words used in a tariff act have some peculiar trade meaning, congress must be assumed to have used them with the meaning they had when inserted in the act; but when a descriptive phrase is used, having no peculiar trade meaning, such as "medicinal preparations," the articles designated by such phrase will be such as from time to time come within its meaning, and not solely those meant by it at the time of the passage of the act.
—United States v. Roessler & Hasslacher Chemical Co., 79 Fed. 313.... 24 C. C. A. 604

2. Goods subject to duty, rate and amount.
Acetanilid, a chemical compound prepared from coal tar, not a color or dye, and principally used in the arts, in the manufacture of dyestuffs, though also used in medicine, is dutiable under paragraph 19 of the tariff act of 1890, as a preparation of coal tar, and not under paragraph 75, as a medicinal preparation, or paragraph 76, as a chemical compound, not specially provided for. 71 Fed. 957, affirmed.
—United States v. Roessler & Hasslacher Chemical Co., 79 Fed. 313.... 24 C. C. A. 604

Acetate of copper, though a variety of verdigris, and known commercially as "pure or distilled verdigris," was dutiable under paragraph 76 of the tariff act of 1890, as a chemical compound, and was not entitled to free entry under paragraph 749 of the same act, as verdigris or subacetate of copper. 71 Fed. 954, reversed.
—United States v. Ducas, 78 Fed. 339.....24 C. C. A. 121

Boards and planks of uniform length, width, and thickness, planed and matched for splines, are not dutiable as "manufactures of wood," under paragraph 181, Act 1894, but are entitled to free entry as "dressed lumber," under paragraph 676. 74 Fed. 548, affirmed.
—United States v. Dudley, 79 Fed. 75.....24 C. C. A. 449

The circular letter of the secretary of the treasury of October 20, 1890, continuing in force articles 381–383 of the treasury regulations of 1884, prescribed the regulations under which proof should be made of the identity of American articles reimported, under paragraph 493 of the tariff act of 1890. Such regulations apply to boxes imported filled with fruit, which have been exported from the United States in the form of shooks, and proof of the identity of such boxes with the shooks exported, furnished in any other form than that prescribed by such regulations, will not entitle the boxes to free entry. 72 Fed. 46, reversed.
—United States v. Dominici, 78 Fed. 334.....24 C. C. A. 116

The provision in paragraph 257, Act Aug. 28, 1894, that "cotton cloth," as used in the preceding paragraphs, shall include "all woven fabrics of cotton in the piece, whether figured, fancy, or plain," etc., does not apply to embroidered cotton cloth, which was not embroidered in the loom.
—United States v. Einstein, 78 Fed. 797.....24 C. C. A. 346

Coverings or cases made of silk, leather, or paper, and containing needles, such cases being ornamental articles, arranged as permanent receptacles for the needles, are dutiable under the tariff act of 1890, according to their com-

Digitized by Google

ponent material of chief value, as manufactures of silk, leather, or paper, and are not entitled to free entry, as usual coverings of the needles, under section 19 of the act of June 10, 1890.

—United States v. Mathews, 78 Fed. 345.....24 C. C. A. 127

Distilled spirits withdrawn from bond under Rev. St. § 3330, which authorizes withdrawals for export without payment of the internal revenue tax, and forbids the relanding of the goods in the United States, cannot be reimported on payment of the original tax, pursuant to section 2500. 54 Fed. 367, reversed.

—Flagler v. Kidd, 78 Fed. 341.....24 C. C. A. 123

"Dotted Swisses," being white, bleached, woven, cotton fabrics in the piece, embroidered after leaving the loom by an additional process of manufacture, though not known in commerce as "embroideries," are dutiable as articles embroidered, under paragraph 276, Act Aug. 28, 1894, and not under the countable clauses of the cotton schedule.

—United States v. Einstein, 78 Fed. 797.....24 C. C. A. 346

Gun barrels and gun stocks, with locks, etc., constituting all the parts of complete breech-loading shotguns, and so adapted to each other in the process of manufacture as to be made into complete shotguns by inserting the barrels into the stocks, are dutiable, when shipped to the same person, on the same vessel, under the tariff act of 1890, as shotguns, and not as manufactures of metal not specially provided for, though the barrels and stocks are separately packed and invoiced. U. S. v. Schoverling, 13 Sup. Ct. 24, 146 U. S. 76, distinguished.

—United States v. Irwin, 78 Fed. 799.....24 C. C. A. 349

Empty pint wine bottles, commercially known as "hock bottles," are dutiable under the final clause of paragraph 88 of the tariff act of 1894, at 40 per cent. ad valorem, and not under the second clause, at 1¾ cents per pound, as vials holding not more than one pint, and not less than one-quarter of a pint.

—Grace v. Collector of Customs of Port and District of San Francisco, 79 Fed. 315.....24 C. C. A. 606

Natural gas was exempt from duty under paragraph 651 of the act of 1890, as a crude mineral, and was not dutiable under section 4, as a "raw or unmanufactured article not enumerated." 73 Fed. 191, affirmed.

—United States v. Buffalo Natural Gas Fuel Co., 78 Fed. 110..... 24 C. C. A. 4

"Nucoa butter," made, by a process not clearly shown, from cocoanut oil, which process consists in part in pressing the oil in a solid state to eliminate the softer oils, then melting the remaining solid, and washing it with steam, is dutiable as "cocoa butterine," under paragraph 230 of the act of August 27, 1894, and is neither exempt from duty as "cocoanut oil," under paragraph 568, nor dutiable as an unenumerated manufactured article, under section 3, of said act.

—Apgar v. United States, 78 Fed. 332.....24 C. C. A. 113

3. Entry and appraisal—Appeal.

The circuit court of appeals will not review a finding of facts by the board of general appraisers, not controverted by new evidence in the circuit court, unless manifestly unsupported by the evidence or clearly against the weight thereof.

—Apgar v. United States, 78 Fed. 332.....24 C. C. A. 113

4. Payment—Protest.

When an importer intends to rely upon the similitude clause of the tariff act for the purpose of identifying his merchandise with some enumerated article of the tariff schedules, and means to place his objection to the action of the collector on the ground that the collector has not given due effect to that provision, he should state the fact in his protest; and, if he fails to do so, his objection is not stated distinctly and specifically, within the meaning of the statute. Accordingly, *held*, that a protest, claiming that the articles in question were dutiable under the provision of the tariff act imposing a duty on

Digitized by Google

precious stones, was insufficient to raise the question whether such articles should have been classified as precious stones by force of the similitude provision of the act.
—Hahn v. Erhardt, 78 Fed. 620.....24 C. C. A. 265

DAMAGES.

For causing death, see "Death," 2, 3.
For collision, see "Collision," 5.
For failure to issue process, see "Clerks of Courts."
Measure for breach of bond of indemnity, see "Indemnity."

Compensatory damages—Medical expenses.
The liability of a defendant, through whose negligence a plaintiff has been injured, for the plaintiff's doctors' and nurses' bills, rests upon the ground that they were rendered necessary by the defendant's neglect of duty, and is not altered, whatever arrangement the plaintiff may have made for the payment of such bills, or whether he ever pays them.
—Denver & R. G. R. Co. v. Lorentzen, 79 Fed. 291....24 C. C. A. 592

DEATH.

1. **Actions for causing death—Evidence.**
When the statute giving a right of action for damages for negligence causing death provides that the damages recovered shall inure to the benefit of the family of the deceased, it is competent to prove, upon the trial of such an action, the number of children left by such deceased.
—Felton v. Spiro, 78 Fed. 576.....24 C. C. A. 321

2. **—— Damages.**
The amendment of 1871 to sections 2291 and 2292 of the Code of Tennessee, relating to the recovery of damages for acts or neglects causing death, was intended to affect the procedure, and not the beneficiaries of the statute; and since such amendment, as before, damages recovered in such actions inure to the benefit of the widow and children of the deceased, and not to the widow alone.
—Felton v. Spiro, 78 Fed. 576.....24 C. C. A. 321

3. **—— Instructions.**
In an action brought under the Arkansas statute, by an administrator, to recover the damages sustained by the next of kin by the killing of the intestate through defendant's negligence, it is not error to permit the plaintiff to prove the nature of the injuries causing the intestate's death, when the court specifically charges the jury that nothing can be allowed for the pain and suffering of the deceased, nor for the grief or distress of any one.
—St. Louis & S. F. Ry. Co. v. Hicks, 79 Fed. 262.....24 C. C. A. 563

DEMURRER.

See "Equity," 3; "Pleading."

DEPOSITIONS.

Taking proofs in equity, see "Equity," 4.

DIVERSE CITIZENSHIP.

See "Courts," 2, 3.

DOCUMENTARY EVIDENCE.

See "Evidence," 2.

Digitized by Google

DUTIES.

See "Customs Duties."

EQUITY.

See, also, "Injunction."
Change of form of action, see "Action."

1. Laches.
Laches do not grow out of the mere passage of time, but out of the inequity of permitting a claim to be enforced, arising from some change in the condition or relations of the property or parties. Accordingly, *held*, that a nonresident owner of wild lands, who had reason to suppose the taxes thereon were paid, and had delayed, for a period beyond that of the statute of limitations, to assert his claim against one who had held the lands under a tax deed, without improving them, might not be guilty of laches, although he would be barred by the statute of limitations.
—Bartlett v. Ambrose, 78 Fed. 839.....24 C. C. A. 397

2. Process—Waiver.
The sole office of the writ of subpœna is to bring a defendant into court, in order that the court may acquire jurisdiction of his person; and, when a defendant has appeared generally in a cause, and subsequently, upon the filing of an amended bill containing a new cause of action, stipulates by his solicitor to file an answer to the merits of such amended bill, no subpœna thereon is required.
—Seattle, L. S. & E. Ry. Co. v. Union Trust Co., 79 Fed. 179.....
24 C. C. A. 512

3. Pleading—Hearing on demurrer.
It is contrary to correct practice for the court, upon a demurrer to a bill, to consider evidence submitted by consent of the parties; and an order entered upon such a hearing, overruling the demurrer and granting relief, is altogether irregular.
—Stratton v. Dewey, 79 Fed. 32.....24 C. C. A. 435

4. Taking proofs.
The power conferred upon the supreme court by the act of August 23, 1842 (5 Stat. 518; Rev. St. § 862), to prescribe the forms and modes of taking and obtaining evidence, is valid and constitutional, and under the amendment to the sixty-seventh equity rule, adopted pursuant to such power, the courts of the United States are authorized to appoint examiners to take testimony orally beyond the limits of the district in which a suit is pending, and the attendance of witnesses before such an examiner may be compelled by the courts in the district to which the examiner is sent.
—White v. Toledo, St. L. & K. C. R. Co., 79 Fed. 133....24 C. C. A. 467

ERROR, WRIT OF.

See "Appeal and Error."

ESTOPPEL.

To allege negligence, see "Mortgages," 2.
—— title, see "Homestead."
To deny agency, see "Shipping," 3.
—— liability as stockholder, see "Banks and Banking," 4.
—— validity of policy, see "Insurance," 4.
To dispute authority of officer of bank, see "Banks and Banking," 2.
To question validity of increase of stock, see "Corporations," 1.
To show true title, see "Shipping," 3.

Digitized by Google

EVIDENCE.

In action for collision, see "Collision," 4.
—— for libel, see "Libel and Slander," 2.
—— of trespass to try title, see "Trespass to Try Title."
Of authority of agent, see "Principal and Agent."
To explain contract, see "Contracts."

1. Competency in general.

Upon the trial of a suit brought by the receiver of an insolvent national bank to collect an assessment from one who had transferred his stock, a letter written by the defendant to a bank examiner, in reply to an inquiry about the bank, in which defendant admits his transfer of his stock when the bank was embarrassed, is not a privileged communication, though the bank examiner's letter, to which it is a reply, is marked "Confidential."

—Cox v. Montague, 78 Fed. 845.....24 C. C. A. 364

When a party has introduced in evidence letters written to him by his attorney in reference to the transactions affecting the matters in issue, he thereby opens the door to justify and require the court to admit the testimony of such attorney, when called by the opposite party to testify as to such transactions.

—White v. Thacker, 78 Fed. 862.....24 C. C. A. 374

Where a railroad employé has been injured by the movement of cars about which he was at work, statements of the conductor of the train, made almost immediately, and while the cars were moving or had just stopped, and while the injured man was bleeding from the injury at that moment received, describing his own part in bringing about the motion that effected the injury, are admissible, on the trial of an action for such injury, as part of the res gestæ.

—Peirce v. Van Dusen, 78 Fed. 693.....24 C. C. A. 280

2. Documentary evidence.

It is not error to admit, in connection with the testimony of a witness, a diagram of the place where facts testified to by him occurred, which diagram has been made from the witness' direction, and which he swears is correct.

—Bunker Hill & S. Mining & Concentrating Co. v. Schmelling, 79 Fed. 263.....24 C. C. A. 564

Upon the trial of an action against the N. Co., a witness testified that he mailed a letter, addressed to the home office of the company; that he received in reply a letter written on a printed letter head of the N. Co., which was signed with a rubber stamp fac simile of the signature of an officer of the company, who had signed a plea in the action, and which referred to the subject-matter of the witness' letter to the N. Co. *Held*, that the letter received by the witness was sufficiently proven, and was admissible.

—National Acc. Soc. v. Spiro, 78 Fed. 774.....24 C. C. A. 334

3. Parol evidence affecting writings.

The rule that parol evidence of the contents of writing is not competent does not apply to a writing which is collateral only to the issue and not directly involved.

—Scullin v. Harper, 78 Fed. 460.....24 C. C. A. 169

A lease and subsequent modification thereof construed, and *held* to disclose no such ambiguity as would warrant the introduction of prior oral negotiations or understandings.

—Coloritype Co. v. Williams, 78 Fed. 450.....24 C. C. A. 163

4. Opinion evidence.

Upon the question of the amount of damages to a number of cattle, caused by the negligent delay of a carrier in delivering them, a witness, who is familiar with the handling and transportation of cattle and with their market value, and has attended the cattle in question during their transportation, may

Digitized by Google

give his opinion as to the amount of damage sustained by them in consequence of the detention, and as to the difference in their value between the condition in which they arrived at their destination and that in which they would have arrived if there had been no delay.
—St. Louis, I. M. & S. Ry. Co. v. Edwards, 78 Fed. 745..24 C. C. A. 300

EXCEPTIONS, BILL OF.

Necessity, see "Appeal and Error," 5.
Time of taking and sufficiency, see "Appeal and Error," 2.

EXECUTORS AND ADMINISTRATORS.

Enforcement of rights against, see "Wills," 2.

Administration bond—Effect of approval.
The statutes of Texas provide (Rev. St. 1895, art. 2222 et seq.) that a husband who survives his wife, in order to be appointed administrator of and authorized to sell the community property, must give a bond conditioned for faithful administration of such property and payment of one-half to the persons entitled, which bond shall be approved by the county judge, whose order of approval shall be recorded in the minutes of the court which has general jurisdiction in probate matters. *Held*, that an order so made is in effect a judgment of the court, and is not void or open to attack in a collateral proceeding, although the bond accepted and approved by it does not conform to the statutory requirements.
—Townsend v. P. J. Willis & Bro., 78 Fed. 850.....24 C. C. A. 369

FACTORS.

Rights and liabilities as to third persons.
Certain wool factors, in alleged violation of statutory and common law, purchased wool in their possession from their customers, with the knowledge and approval of other brokers, to whom they consigned the same for sale. In an action by the latter against them to recover an excess of advances over the sum realized on the sale, *held*, that there was no room for the application of the doctrine in pari delicto, and plaintiffs were entitled to recover.
—Jackson v. Dwight, 78 Fed. 896.....24 C. C. A. 380

FEDERAL COURTS.

See "Courts," 2-4.

FELLOW SERVANT.

See "Master and Servant," 3.

FINAL JUDGMENT.

Subject of appeal, see "Appeal and Error," 1.

FINDINGS.

Review of, see "Appeal and Error," 10.

FORECLOSURE.

Of mortgages, see "Mortgages," 3; "Railroads," 3, 4.

Digitized by Google

FOREIGN CORPORATIONS.

See "Corporations," 6.

FRAUD.

Action against officers of bank for fraud, see "Banks and Banking," 2.

GRANT.

Of public lands, see "Public Lands."
Of right to construct wharves, see "Wharves," 1.

GUARDIAN AND WARD.

Jurisdiction of action by guardian, see "Courts," 3.

HARMLESS ERROR.

See "Appeal and Error," 11.

HOMESTEAD.

Incumbrance—Bona fide purchasers.
An innocent purchaser of notes secured by trust deed on lands constituting in fact a homestead, but who was misled by affidavits of the husband and wife that a sale thereof by them, in fact colorable, was bona fide, will not be enjoined, after foreclosing and buying in the legal title, from maintaining ejectment on such title.
—Hazzard v. Fitzhugh, 78 Fed. 554.....24 C. C. A. 232

INDEMNITY.

Effect of judgment against principal, see "Judgment."

Measure of damages.
Where the plaintiff in a judgment against an insurance company upon a policy of insurance sues on a bond executed by the company to indemnify policy holders, the proper measure of damages is the amount of the judgment, including the costs, and interest thereon.
—Union Guaranty & Trust Co. v. Robinson, 79 Fed. 420..24 C. C. A. 650

INFRINGEMENT.

Of patents, see "Patents," 6, 7.
Of trade-marks, see "Trade-Marks and Trade-Names," 2, 3.

INJUNCTION.

Against infringement of patents, see "Patents," 7.
—— of trade-mark, see "Trade-Marks and Trade-Names," 3.
Appeal from decree granting injunctions, see "Appeal and Error," 1.
Review of decision on motion to dissolve, see "Appeal and Error," 9.

1. Right to an injunction—Laches.
One R. agreed with the E. Co. for the purchase of certain timber lands, and, with its consent, began to cut the timber. Shortly after this agreement, and before the formal contract of sale was executed, certain parties, claiming

Digitized by Google

the land, notified R. of their claim, and forbade him to cut the timber. They then brought an action of ejectment against the E. Co., and, upon a bill filed against it, obtained an injunction restraining it from cutting timber on the land. Later, but within little more than a year from the making of R.'s agreement with the E. Co., the claimants brought an action of ejectment against R., and, upon a bill filed, obtained an injunction restraining him from cutting the timber, which injunction R. moved to dissolve. *Held*, that there had been no such acquiescence on the part of the claimants as to estop them from claiming an injunction against R. 72 Fed. 1000, affirmed.

—Ritter v. Ulman, 78 Fed. 222.....24 C. C. A. 71

2. Preliminary injunctions—Dissolution.

When, upon a bill in equity filed as ancillary to an action of ejectment, a preliminary injunction has been granted restraining the defendant from cutting timber upon the land in controversy, for the purpose of preserving the status quo pending the litigation, and a verdict and judgment are afterwards rendered for the defendant in the action of ejectment, it is proper for the court, in the exercise of its discretion, upon being informed of such verdict and judgment, to dissolve the injunction.

—King v. Buskirk, 78 Fed. 233.....24 C. C. A. 82
King v. McClintock, 78 Fed. 925.....24 C. C. A. 684

INSOLVENCY.

Of corporations, see "Corporations," 4.
Of national banks, see "Banks and Banking," 5.

INSTRUCTIONS.

To jury, see "Trial," 4.

INSURANCE.

1. Regulation—Actions on securities.

Under Sand. & H. Dig. Ark. § 4133, a bond executed by an insurance company to indemnify policy holders, though by its terms made to the state of Arkansas, is for the use and benefit of the beneficiaries in the policies of insurance issued in that state, and any such beneficiary can maintain an action for breach of the condition of the bond.

—Union Guaranty & Trust Co. v. Robinson, 79 Fed. 420..24 C. C. A. 650

2. The contract in general—Construction.

All ambiguities and obscurities in a policy of insurance are to be resolved against the insurer, and therefore the word "effected" in an accident policy will not, in order to relieve the insurer, be read "affected," although it be meaningless as written.

—Commercial Travelers' Mut. Acc. Ass'n of America v. Fulton, 79 Fed. 423.....24 C. C. A. 654

3. Forfeiture of policy for breach of warranty.

Policies of insurance on a stock of goods consisted of a printed sheet containing the formal printed parts, and, attached thereto, a paper containing a description of the insured property, together with a "covenant and warranty" by the assured to keep, in a fireproof safe, or in some place not exposed to a fire which would destroy the building containing the goods, an inventory and account books containing a complete record of all business transacted. *Held*, that the covenant as to the keeping and method of preserving the inventory and books was a part of the policy, and constituted a warranty, the breach whereof prevented any recovery.

—Lozano v. Palatine Ins. Co., 78 Fed. 278.....24 C. C. A. 85

4. Estoppel or waiver affecting right to avoid or forfeit policy.

The F. Ins. Co. issued a policy on M.'s life, based on an application warranting all its statements to be true. In an action on the policy, it appeared that it was issued at the solicitation of an agent of the company, who was

Digitized by Google

left by M. to fill up the application which M. signed, and that the answers to material questions in the application were totally at variance with the facts. *Held*, that the insurance company was not estopped to deny the validity of the policy, and a verdict in its favor was properly directed by the court.

—Maier v. Fidelity Mut. Life Ass'n, 78 Fed. 566.....24 C. C. A. 239

When an applicant for insurance has told the soliciting agent of the insurance company the facts in relation to an incumbrance on the property it is proposed to insure, and the agent, asserting that such facts are not material, has inserted in the application which is signed by the applicant a statement that there is no incumbrance on the property, but there is nothing to show that the company would have declined the risk if it had known of the incumbrance, nor that either the insured or the agent perpetrated any fraud on the company, the insurance company, in case of a loss, is liable upon a policy issued upon such application, notwithstanding it contains a stipulation that any false answer in the application should render it void. Insurance Co. v. Fletcher, 6 Sup. Ct. 837, 117 U. S. 519, distinguished.

—Phœnix Ins. Co. v. Warttemberg, 79 Fed. 245.....24 C. C. A. 547

5. Risks and causes of loss—Accident insurance.

The expression "voluntary exposure to unnecessary danger," used in stating the exceptions to the liability of an insurance company upon an accident policy, refers only to dangers of a real, substantial character, which the insured recognized, but to which he, nevertheless, purposely and consciously exposed himself, intending at the time to assume all the risks of the situation.

—Travelers' Ins. Co. of Hartford v. Randolph, 78 Fed. 754..24 C. C. A. 305

The words "voluntary and unnecessary exposure to danger" and "voluntary exposure to avoidable danger" mean the same as the words "voluntary exposure to unnecessary danger."

—Fidelity & Casualty Co. v. Randolph, 78 Fed. 924; Standard L. & Acc. Ins. Co. v. Same, Id.; Preferred Acc. Ins. Co. v. Same, Id.; Union C. & S. Co. v. Same, Id.....24 C. C. A. 320

Cases determining that certain acts constitute contributory negligence, such as to defeat a recovery for personal injuries claimed to have been caused by the negligence of another, have no application to actions upon accident insurance policies which do not in terms exempt the insurer from liability for injuries caused by the negligence of the insured, since the liability upon such policies depends upon contract, and the negligence of the plaintiff is no defense unless expressly made so.

—Travelers' Ins. Co. of Hartford v. Randolph, 78 Fed. 754..24 C. C. A. 305

Under a policy of accident insurance, which expressly declares that the insurance does not cover entering or trying to enter or leave a moving conveyance using steam as a motive power, and which also excepts injuries due to voluntary exposure to unnecessary danger, voluntary riding upon the platform of a rapidly moving railroad car, though there may be no necessity therefor, is not, in itself and as matter of law, a voluntary exposure to unnecessary danger, but presents a question of fact to be determined by the jury under all the evidence.

—Travelers' Ins. Co. of Hartford v. Randolph, 78 Fed. 754..24 C. C. A. 305

The T. Ins. Co. issued an accident policy to one S., insuring him against death resulting through external, violent, and accidental means, but not covering death resulting wholly or partly, directly or indirectly, from disease or bodily infirmity, or voluntary overexertion. S., a man 53 years of age, while engaged in work which required stooping, and shortly after running rapidly up a hillside, to get an article needed in his work, was attacked with pains in his head, and shortly after died. On the trial of an action on the policy, two physicians, called by the plaintiff, testified that S. died of apoplexy, which is a bodily infirmity or disease, and that there was nothing in the circumstances to have caused death if there had been no bodily infirmity or predisposition to apoplexy. *Held*, that it was error to refuse to direct a verdict for the defendant.

—Travelers' Ins. Co. v. Selden, 78 Fed. 285.....24 C. C. A. 92

Digitized by Google

Under a policy of accident insurance which provides that it shall not extend to nor cover accidental injuries or death "resulting from or caused, directly or indirectly, wholly or in part, by disease in any form," there can be no recovery for the death of the insured if he had a disease but for which death would not have resulted from the accident; and, where the insured had a diseased heart, it was error to give an instruction allowing the jury to find for the plaintiffs if they believed the accident was sufficient to cause the death of a man with a diseased heart, although insufficient to kill one with a normally healthy heart.

—Commercial Travelers' Mut. Acc. Ass'n of America v. Fulton, 79 Fed. 423.....24 C. C. A. 654

6. Actions on policies—Instructions.

Where an accident insurance policy exempts the insurer from liability for injuries received while violating rules of a corporation, it is proper, in an action on the policy, to leave to the jury, upon all the evidence, the question whether the insured knew of a rule of a corporation which it is claimed he was violating when injured, and to charge them that, in order for the insured to be bound by the rule, it must be one which the corporation enforced or used reasonable effort to enforce.

—Travelers' Ins. Co. of Hartford v. Randolph, 78 Fed. 754..24 C. C. A. 305

INTEREST.

As damages, see "Collision," 5.

Recovery—Demand and tender.

When the owner of a vessel has demanded from an insurer an amount claimed to be due under the policy of insurance by reason of injury to the vessel from perils insured against, and the insurer, while admitting a less amount to be due, has resisted payment of the amount claimed throughout a long litigation, but has never tendered the amount admitted, it is proper for a court of admiralty to allow interest from the time of the demand on the amount finally found to be due, though slightly less than that claimed.

—New Zealand Ins. Co. v. Earnmoor S. S. Co., 79 Fed. 368..... 24 C. C. A. 644

JUDGMENT.

Against bank, when binding on receiver, see "Banks and Banking," 5.
Lien of judgment against railroad, see "Railroads," 2.
Of foreclosure, see "Mortgages," 4.
On demurrer, see "Pleading."
What operates as, see "Executors and Administrators."

Conclusiveness of adjudication.

A judgment against an insurance company on a policy of insurance is, if not conclusive, prima facie evidence against the surety in a bond executed by the company to indemnify policy holders.

—Union Guaranty & Trust Co. v. Robinson, 79 Fed. 420..24 C. C. A. 650

LACHES.

See "Equity," 1; "Injunction," 1.

LANDLORD AND TENANT.

Leases—Modification.

A lease made in August demised the four upper lofts of a building then in course of erection for five years from February 1st following. In September the parties made a further written agreement, whereby the lessor stipulated to have the premises ready for occupancy on February 1st, excepting certain minor details, and that he would give the lessees possession at as early a

Digitized by Google

date before February 1st as he could have the lofts in suitable condition; the rent, however, to commence February 1st, "or as soon thereafter as the building is completed." If the premises were not ready for occupancy on that day, the lessor was to forfeit $50 a day thereafter, etc. *Held*, that this did not so modify the lease as that the lessee would not be liable for rent, and would be entitled to the daily penalty, until the whole building was completed, but merely bound him to have the leased lofts ready on February 1st, except the minor details mentioned.
—Coloritype Co. v. Williams, 78 Fed. 450.....24 C. C. A. 163

LEASES.

See "Landlord and Tenant"; "Railroads," 1.

LIBEL AND SLANDER.

1. Privileged communications.
Communications, made by a stockholder of a corporation to an officer thereof, of matters concerning its employés, which, if true, are proper to be so communicated, are privileged, and, unless spoken with actual malice, the burden of proving which is on the plaintiff, do not give ground for an action for slander.
—Scullin v. Harper, 78 Fed. 460.....24 C. C. A. 169

2. Actions—Evidence.
In an action for slander, where the defendant claims that the words spoken were privileged, because spoken by him in good faith, as a stockholder in a corporation, to an officer thereof, concerning one of its employés, it is competent for the defendant to testify that what he said was upon information, without malice, in the belief that it was true, to state any relevant part of the conversation in the course of which he uttered the alleged slander, including statements made by him of the nature of the information he claimed to have, and also to testify to the purport of an entry in a book, claimed to be the basis of his statements, without producing the book itself.
—Scullin v. Harper, 78 Fed. 460.....24 C. C. A. 169

In an action for libel in a newspaper publication, testimony of the city editor as to his belief in the thoroughness of a preliminary investigation as to the truth of the matter published as required by the rules of the newspaper proprietor was properly stricken out, as his good faith or malice was not in issue, and the question of punitive damages turned entirely on the malice of the defendant.
—Bennett v. Salisbury, 78 Fed. 769.....24 C. C. A. 329

Where punitive damages only are sought, and no evidence of special damages is given, evidence by defendant tending to show absence of special damages may be excluded as immaterial.
—Bennett v. Salisbury, 78 Fed. 769.....24 C. C. A. 329

Evidence that plaintiff has recovered a judgment against another newspaper for publishing the same libel is inadmissible.
—Bennett v. Salisbury, 78 Fed. 769.....24 C. C. A. 329

3. —— Province of court and jury.
In an action for slander, based on words, some of which are actionable per se, and others not, it is error to charge the jury that, if the defendant spoke the words, or any portion of them, actionable in themselves, the plaintiff is entitled to recover, since this leaves it to the jury to determine whether any portion of the words charged is actionable.
—Scullin v. Harper, 78 Fed. 460.....24 C. C. A. 169

A newspaper proprietor, absent in Europe, prescribed for his employés a rule that communications of a personal nature sent by unknown correspondents must be verified on investigation by an accredited correspondent, and,

Digitized by Google

when so verified, might be published. *Held*, that where a scandalous story, so received, verified, and published, was utterly untrue, the court, in an action against such proprietor, properly left it to the jury to determine whether the rule evinced such wanton disregard of others' rights, and such reckless indifference to consequences, as to be equivalent to malice, which would authorize the infliction of punitive damages.

—Bennett v. Salisbury, 78 Fed. 769.....24 C. C. A. 329

4. —— Instructions.

Where the publication contained utterly false charges of unchaste and scandalous conduct, the court told the jury it was quite likely they would consider it as an atrocious libel, of the character which, in remoter regions, where respect for law does not prevail to the same extent, is frequently punished by an appeal to the horsewhip or shotgun. *Held*, that this was not error, as, in connection with the whole charge, it was not of an inflammatory character, and amounted to no more than a statement that plaintiff was rather to be commended than prejudiced by appealing to the courts for redress.

—Bennett v. Salisbury, 78 Fed. 769.....24 C. C. A. 329

LIENS.

See "Maritime Liens."
Of mortgage, see "Mortgages," 1.
Priority, see "Railroads," 2.

LIMITATION OF ACTIONS.

Laches, see "Equity," 1.

Operation and effect of bar by limitation.

In section 390 of the New York Code of Civil Procedure, relating to limitations on causes of action accruing out of the state, the words "laws of his residence" refer to the residence of the debtor at the time the cause of action accrues, and not at the time of bringing suit; and no action can be maintained in New York by a nonresident on a cause of action against one who, when it accrued, was a nonresident, but afterwards removed to New York, after the expiration of the period of limitation in the state where the debtor resided when the cause of action accrued.

—Aultman & Taylor Co. v. Syme, 79 Fed. 238.....24 C. C. A. 539

MANDAMUS.

Compelling levy of tax to pay bonds, see "Towns."

MARITIME LIENS.

Creation—Supplies.

To create a lien for supplies ordered by the master in a foreign port, it must appear that the supplies were reasonably necessary, and that a credit to the vessel is necessary. The necessity for the supplies may be presumed from their nature, and from the fact that the master ordered them; and, in the absence of other facts, the necessity for binding the vessel may also be presumed. But if the supply man knows that the master has funds of the owners, or of his own, credit to the vessel is not authorized, and no lien is created.

—The Bertha M. Miller, 79 Fed. 365; Tarr v. Jordan, Id..24 C. C. A. 641

One furnishing a small amount of supplies to a fishing vessel in a foreign port, on the order of the master, has no lien, though he give credit on his books to the vessel and owners, when he knows that the vessel brought in and sold for cash sufficient fish to furnish means of payment. Nor is it

Digitized by Google

material that the vessel departed on the day of receiving the supplies, no fraud being practiced.
—The Bertha M. Miller, 79 Fed. 365; Tarr v. Jordan, Id..24 C. C. A. 641

MASTER.

Of vessels, see "Shipping," 2.

MASTER AND SERVANT.

1. The relation—Termination and discharge.
One who is employed as foreman mason at a navy yard at a per diem compensation is not entitled to compensation except for the time during which he actually renders services; and the fact that, after being suspended by the commandant, he holds himself ready to perform such services, gives him no claim against the government.
—Murphy v. United States, 79 Fed. 255.....24 C. C. A. 557

The suspension of such an employé by the commandant is, in effect, his discharge; and the fact that after his suspension a board is appointed to investigate charges against him is no recognition of his status as an employé, and gives him no right to compensation, nor to a recovery of sums expended in traveling to attend before the board.
—Murphy v. United States, 79 Fed. 255.....24 C. C. A. 557

2. Master's liability for injuries to servant—Statutory liability.
The Ohio act of April 2, 1890, for the protection and relief of railroad employés (Laws Ohio 1890, p. 149), providing that railroad or railway corporations or companies shall not make certain contracts for exemption from liability to their employés, shall not use defective cars, etc., and that in actions against such companies for personal injuries to employés the rule as to fellow servants is to a certain extent abrogated, applies to suits brought against a receiver of a railroad corporation operating its road.
—Peirce v. Van Dusen, 78 Fed. 693.....24 C. C. A. 280

The Ohio act for the protection of railroad employés (Laws Ohio 1890, p. 149) is not applicable alone to railroad corporations of Ohio engaged in the domestic commerce of the state, but to all railroad corporations doing business in Ohio, and is binding upon the federal courts and upon receivers appointed by them.
—Peirce v. Van Dusen, 78 Fed. 693.....24 C. C. A. 280

3. —— Fellow servants.
The third section of the Ohio act for the protection of railroad employés (Laws Ohio 1890, p. 149), altering the rule as to the liability of an employer for the negligence of fellow servants, is not repugnant to the provision of the constitution of Ohio (article 2, § 26) that all laws of a general nature shall have uniform operation throughout the state.
—Peirce v. Van Dusen, 78 Fed. 693.....24 C. C. A. 280

The negligence of a fellow servant for which the employer is made liable by Laws Ohio 1890, p. 149, is not merely negligence in the performance of a duty imposed on the master personally, but negligence in the performance of work pertaining to the negligent employé and others in the same work.
—Peirce v. Van Dusen, 78 Fed. 693.....24 C. C. A. 280

4. —— Risks assumed by servant.
A servant has the right to rely on the master's taking due care to give him a safe place and safe instruments with which to do his work, provided, in the exercise of reasonable care on his part, he does not discover any defect himself. But where, in the course of the employment, the acts of third persons, not in the same employment, may increase the danger of the service, and these acts and their character are under the eye of the servant, and, to the servant's knowledge, are not subject to the supervision of the master, the master is not liable if injury results from the negligence of the third persons.
—Hardy v. Shedden Co., 78 Fed. 610..... 24 C. C. A. 261

Digitized by Google

5. —— Actions—Instructions.

In an action against a mining company for personal injuries, caused by the fall upon the plaintiff of a mass of ore, which it was alleged had not been properly shored up by the shift boss in charge of the gang with which plaintiff was working, whom the defendant claimed to be a fellow servant of the plaintiff, the court charged the jury that it was the duty of the defendant to provide the plaintiff with a reasonably safe place to work in, and that this duty could not be devolved upon an agent. In another part of the charge the court expressly and fully instructed the jury that the carelessness of fellow servants was one of the risks assumed by the plaintiff, and that, if the accident could be traced to the negligence of a fellow servant of the plaintiff, the defendant was not liable. *Held*, that the doctrine applicable to fellow servants was not withdrawn from the jury.

—Bunker Hill & S. Mining & Concentrating Co. v. Schmelling, 79 Fed. 263.....24 C. C. A. 564

6. Liability for injuries to third persons—Relation of parties.

The driver of a truck, hired for a special purpose, though the general servant of the owner of the truck, is in such special service the servant of the hirer, and he, and not the owner, is liable to the driver for any negligence in the preparation of the truck for the special service.

—Hardy v. Shedden Co., 78 Fed. 610.....24 C. C. A. 261

A grand army post hired a truck, with driver and horses, for the purpose of erecting on it a superstructure to be used in a Decoration Day procession. Such superstructure was erected and placed on the truck by the post alone. Plaintiff, the driver of the truck, was injured by the fall of the superstructure while driving. *Held*, that plaintiff's employer, the owner of the truck, was not liable for the injury.

—Hardy v. Shedden Co., 78 Fed. 610.....24 C. C. A. 261

MINES AND MINERALS.

Location and acquisition of claims—Conflicting locations.

When a vein of mineral-bearing rock, in its course lengthwise, after passing under the surface limits of one location, on which it outcrops, crosses nearly at right angles the side lines of another, prior location, on which it also outcrops, the side lines of such prior location becoming, by reason of the course of the vein, its end lines, the right to follow the lode in its downward course, between the vertical planes drawn through such side end lines, belongs to such prior location, and the extralateral rights of the other location cease when the vertical plane so drawn between the two locations is reached.

—Tyler Min. Co. v. Sweeney, 79 Fed. 277.....24 C. C. A. 578

MORTGAGES.

Jurisdiction in foreclosure proceedings, see "Courts," 3.
Of railroad property, see "Railroads," 2–4.

1. Construction and operation—Lien and priority.

In 1884 the W. Co. mortgaged to L. certain city lots. In 1891 it sold them, subject to the mortgage, to a railway company, which proceeded to erect a power house upon them, and put them to railroad uses. Subsequently, in a suit brought against the railway company, a receiver was appointed, who operated the railroad under the orders of the court, and, to pay operating expenses, issued receiver's certificates, also under an order of the court, which made such certificates a first lien on the company's property. Upon the request of the certificate holders, the railway company's property, including the lots, was sold, and the proceeds applied to the payment of the certificates. L. was not a party to this suit, but had actual knowledge of the proceedings. During his operation of the railroad, the receiver paid taxes on the property and interest on L.'s mortgage. Be-

Digitized by Google

fore the order for the sale of the railway company's property, L. commenced a suit for the foreclosure of his mortgage. *Held*, that the lien of L.'s mortgage was not extinguished by the proceedings in the suit against the railway company, nor subordinated to the lien of the receiver's certificates, but that his right to foreclosure of his mortgage was unimpaired. Union Trust Co. v. Illinois Midland R. Co., 6 Sup. Ct. 809, 117 U. S. 434, distinguished.
—Third Street & Suburban Ry. Co. v. Lewis, 79 Fed. 196..24 C. C. A. 482

2. Rights and liabilities of parties—Rents and profits.
Where a mortgagor has assisted the agent of the mortgagee in possession in renting the mortgaged premises, and has seen and approved the accounts of rents, without complaining of a want of diligence in renting, he is estopped to claim, on an accounting, that the mortgagee should be charged with more than the rents actually collected.
—Emil Kiewert Co. v. Juneau, 78 Fed. 708.....24 C. C. A. 294

3. Foreclosure—Pleading.
When a suit for the foreclosure of a mortgage has been commenced, based upon a default in interest alone, and, while the suit is pending, the trustee of the mortgage, under the provisions thereof, elects to declare the principal of the bonds secured by it due because of the nonpayment of interest, such election is properly the subject of a supplemental bill, but, if introduced into the suit by amendment to the original bill, objection must be made by demurrer, plea, or answer; otherwise it is waived.
—Seattle, L. S. & E. Ry. Co. v. Union Trust Co., 79 Fed. 179.....
24 C. C. A. 512

4. —— Decree.
When, in a suit for the foreclosure of a mortgage, the parties have stipulated that certain property is covered by the mortgage, no objection can afterwards be made to its inclusion in the decree of foreclosure which could have been obviated by the introduction of any proof.
—Seattle, L. S. & E. Ry. Co. v. Union Trust Co., 79 Fed. 179.....
24 C. C. A. 512

A decree for the distribution of the proceeds of a sale under the foreclosure of a mortgage which provided that the coupons of the bonds secured by it should be preferred over the principal, directed that the surplus, after paying preferential claims, should be equally divided among the bonds, paying a certain sum, less than the face of the bond, to the holder of each bond. *Held* that, though it named only bonds, such decree could not be construed as intended to disregard the preference of the coupons, but was intended to deal with the ownership of bonds with their coupons, the holders of both being at the time the same, and, accordingly, that a holder of coupons subsequently detached, which had matured before the foreclosure, was entitled to be paid in full.
—Burke v. Short, 79 Fed. 6.....24 C. C. A. 422

5. —— Deficiency.
A decree for a deficiency upon the foreclosure of a mortgage may be rendered, under the ninety-second equity rule, without a special prayer therefor in the bill, though it is the better practice to insert such a prayer.
—Seattle, L. S. & E. Ry. Co. v. Union Trust Co., 79 Fed. 179.....
24 C. C. A. 512

6. —— Disposition of proceeds.
Coupons of bonds, not matured at the time of the foreclosure of the mortgage securing them, though merged in the principal of the bonds, are entitled, when detached and separated in ownership from the bonds, to be paid proportionately with the remainder of the principal.
—Burke v. Short, 79 Fed. 6.....24 C. C. A. 422

Where funds have been deposited in court to secure the payment of the amount payable, under a decree of distribution in foreclosure, on certain bonds, and parts of the fund are permitted, by order, to be withdrawn on deposit of some of the bonds, such order contemplates a deposit of bonds

Digitized by Google

with their coupons, and any sums withdrawn on deposit of bonds without coupons, in excess of the amounts properly due thereon, must be refunded.
—Burke v. Short, 79 Fed. 6.....24 C. C. A. 422

MUNICIPAL CORPORATIONS.

See, also, "Towns."

Liability for injuries from defective streets.
A municipal corporation is liable in damages to parties injured through its negligence in failing to keep its streets in proper repair, though no special statute authorizes an action for such cause.
—City of Jacksonville v. Smith, 78 Fed. 292.....24 C. C. A. 97

NATIONAL BANKS.

See "Banks and Banking," 3–5.
Jurisdiction of actions for winding up, see "Courts," 2.

NEGLIGENCE.

Causing death, see "Death."
Damages for, see "Damages."
Liability of clerk of court, see "Clerks of Courts."
Of city, see "Municipal Corporations."
Of fellow servants, see "Master and Servant," 3.
Of master, see "Master and Servant," 2–5.
Of pilot, see "Shipping," 4.
Of railroad companies, see "Railroads," 6, 7.

Actions—Instructions.
It is not error for the court, in an action for personal injuries brought by a woman, to call the jury's attention to the possible bearing of her sex upon the question of contributory negligence, and to permit them to determine, in view of her sex and all the surrounding circumstances, whether she exercised such care as was reasonably to be expected from her.
—Denver & R. G. R. Co. v. Lorentzen, 79 Fed. 291....24 C. C. A. 592

The instructions given in this case upon the questions of negligence and contributory negligence considered, and found unobjectionable.
—Northern Pac. R. Co. v. Lynch, 79 Fed. 268.....24 C. C. A. 570

NEGOTIABLE INSTRUMENTS.

See "Bills and Notes."

NEW TRIAL.

Review of decision, see "Appeal and Error," 9.

Power to set aside verdict.
A federal court, in which a jury has rendered a verdict, has power to set aside such verdict when, in its opinion, it is contrary to the decided or overwhelming weight of the evidence, and, in the exercise of a legal discretion, may properly do so, though the case is not one in which it would have been proper to direct a verdict. Railway Co. v. Lowery, 20 C. C. A. 596, 74 Fed. 463, followed.
—Felton v. Spiro, 78 Fed. 576.....24 C. C. A. 321

NOTICE.

Effect of, see "Adverse Possession."

Digitized by Google

OFFICERS.

Of bank, see "Banks and Banking," 2.

OPINION EVIDENCE.

See "Evidence," 4.

ORDERS.

On reversal, see "Appeal and Error," 12.

PAROL EVIDENCE.

See "Evidence," 3.

PARTIES.

Appeal from order in intervention proceedings, see "Appeal and Error," 1.
To appeal, see "Appeal and Error," 3.
To suit for winding up corporation, see "Corporations," 5.
—— to enforce claim against bank, see "Banks and Banking," 5.

PATENTS.

1. Patentability—Invention.

The production of a sole-cutting machine, consisting of the combination of a rotary cutter and its shaft on a fixed frame, with revolving clamps to hold the rough material mounted on a shaft on a movable carriage, and a revolving form operating to vary the relative positions of the cutter and the material, involves no invention, being a mere carrying forward of the Blanchard invention, for turning or cutting irregular forms.

—Gibbon v. Loewer Sole-Rounder Co., 79 Fed. 325.....24 C. C. A. 612

Invention cannot be predicated of the popularity of the article alone, as the success thereof may be accounted for by superior workmanship, attractive manner of display, and the energy and ability with which it is introduced to the market. 72 Fed. 277, affirmed.

—Ypsilanti Dress-Stay Manuf'g Co. v. Van Valkenberg, 78 Fed. 926.... 24 C. C. A. 416

One who employs mere mechanical skill in the improvement of details is not entitled to patents therefor, although, by the application of such skill, together with diligence, pertinacity, and money, he makes a success of a machine which before was a failure.

—Birmingham Cement Manufacturing Co. v. Gates Iron Works, 78 Fed. 350.....24 C. C. A. 132

2. Application and proceedings thereon—Interference.

Failure of a party to move for dissolution of an interference in the patent office is not an acquiescence in the ruling that the inventions, as limited by the prior art there shown, were identical and patentable. While the decision on interference may be res judicata as to priority, it does not preclude either party from raising other questions.

—National Mach. Co. v. Wheeler & Wilson Manuf'g Co., 79 Fed. 432.. 24 C. C. A. 663

3. Requisites and validity of letters patent.

Every patent for a product or composition of matter must identify it so that it can be recognized aside from the description of the process for making it, or else nothing can be held to infringe which is not shown to have been made by that process.

—Matheson v. Campbell, 78 Fed. 910.....24 C. C. A. 384

Digitized by Google

A patent for a coloring compound made from coal-tar products should be so plain in its description that an ordinary manufacturer of aniline colors, having such ordinary knowledge as existed in this country at the date of the patent, would be enabled thereby to carry out successfully its processes. 69 Fed. 597, affirmed.

—Matheson v. Campbell, 78 Fed. 910.....24 C. C. A. 384

In a patent for a coloring compound made from a coal-tar product, the omission, from the description of the specific process, of an express direction for a second diazotization, whereby an amido-azo compound is converted into a diazo-azo compound, *held* immaterial, as any one skilled in the art would understand that there was to be a second diazotization, because it was so stated in the general formula, and because a reference in the specification to a diazo-azo compound would inform any practical coal-tar manufacturer that it was necessary. 69 Fed. 597, affirmed.

—Matheson v. Campbell, 78 Fed. 910.....24 C. C. A. 384

The use of "nitrate" of sodium for "nitrite" of sodium, in the specifications of a patent for a coloring compound made from coal-tar products, *held* not sufficient to invalidate the patent, it appearing that no one skilled in the art would be misled thereby, and that this particular misuse of terms was common in the earlier patents relating to the art. 69 Fed. 597, affirmed.

—Matheson v. Campbell, 78 Fed. 910.....24 C. C. A. 384

The rule that an applicant is bound by the acts of his solicitor does not require the avoidance of a patent on the theory of a fraudulent suppression or misrepresentation, where, through the solicitor's ignorance of the chemical processes involved, some changes were made in the original specifications, during the absence of the applicants in Europe, resulting in immaterial omissions and errors, which could not mislead one skilled in the art.

—Matheson v. Campbell, 78 Fed. 910.....24 C. C. A. 384

4. Construction and operation of letters patent—Limitation of claims.

When a patent is for a combination only, none of the separate elements of which it is composed are included within the monopoly.

—Carter Mach. Co. v. Hanes, 78 Fed. 346.....24 C. C. A. 128

The specifications of a patent for a color compound produced from coal-tar products set forth, by a general formula, as the broad invention or discovery, that any sulpho acids of any radical (a group comprising over 100 different substances), when treated according to the process described, would produce the compound of the patent. The patent then set forth, "as an example," a special process by which the compound was produced from one of these substances. In fact, only a few of the substances would produce the compound. *Held*, that the patentees were not entitled to a monopoly of all the substances which might be found, by future experiments, to produce the compound claimed; nor could the patent be construed as covering merely the particular substance used in their "example," and it was therefore void. 69 Fed. 597, reversed.

—Matheson v. Campbell, 78 Fed. 910.....24 C. C. A. 384

5. Conveyances and contracts.

An assignment by two inventors of all their discoveries, applications, and patents relating to "electric smelting processes and furnaces," construed, and *held* to pass title to a pending individual application of one of the assignors for a process of reducing ores by "electrolysis," where the essential idea set forth in the applications of both assignor and assignees was the reduction of ores and metallic compounds by depositing the material to be treated between the electrodes of a dynamo-electrical machine, and passing therethrough the electric current, electrolysis being merely an incident of that operation. 68 Fed. 354, reversed.

—Cowles Electric Smelting & Aluminum Co. v. Lowrey, 79 Fed. 331.... 24 C. C. A. 616

Certain inventors who had pending certain applications, etc., for patents relating to "electric smelting processes and furnaces," procured from other alleged inventors of similar processes an assignment of all their discoveries and inventions, patents, pending applications, and caveats on file, "relating

Digitized by Google

to electric smelting processes and furnaces, which do or may interfere with" any pending applications of the assignees. *Held*, that the word "interfere" was not used in the strict technical sense in which it is used in the patent office, and that the contract showed a purpose to remove all obstructions, so that the applications filed by the assignees might proceed without any contest by the assignors.

—Cowles Electric Smelting & Aluminum Co. v. Lowrey, 79 Fed. 331.... 24 C. C. A. 616

The word "smelting," as used in the phrase "electric smelting," to designate a process of reducing ores by the use of electric current, is not necessarily confined to its more technical meaning of melting ores in the presence of some reagent, as carbon, which operates to separate the metallic element by combining with the nonmetallic element, but may include a reduction effected by the electric current in the absence of a reagent, the current effecting the same purpose as the reagent.

—Cowles Electric Smelting & Aluminum Co. v. Lowrey, 79 Fed. 331.... 24 C. C. A. 616

By a contract between a patentee of rotary shuttle sewing machines and a corporation, the patents were to be vested in a trustee; the corporation was "immediately to engage in and carry on with energy the business of making and selling sewing machines during the life of the contract, and shall make such number of machines as to keep the supply as nearly as practicable up to the demands of the trade"; the contract was to endure during the life of the patent, unless terminated by the corporation by giving written notice; the corporation was to pay a fixed royalty "upon each machine manufactured by it embodying the principles covered by the first party's patent," but was not obliged "to make rotary shuttle sewing machines like any model that has been or may be construed [constructed] or settled upon as a standard, but it may from time to time make such changes as may seem to it expedient," but no such alteration was to relieve it from paying royalties so long as the machine involved "any of the essential principles" covered by the patent; the corporation was to make monthly statements "of the number of said machines shipped from the factory," and make settlements accordingly; it was expressly stated that the patentee did not guaranty the validity of the patents; and the royalties were to cease whenever the patents should be decreed invalid by a court of competent jurisdiction. *Held*, that the corporation was not restricted to the manufacture of machines embodying the principles of the patent, or bound to pay royalties on all machines made, whether covered by the patent or not, so long as it did not terminate the contract by written notice, but was required only to make and pay royalties on machines sufficient to meet the demands of the trade for that machine, and that in an action for royalties it was entitled to show that the machines made and sold did not embody the principles of the patent.

—Standard Sewing-Mach. Co. v. Leslie, 78 Fed. 325.....24 C. C. A. 107

6. Infringement—What constitutes.

There is no infringement of a patent which claims mechanical powers in combination, unless all the parts have been substantially used.

—Carter Mach. Co. v. Hanes, 78 Fed. 346.....24 C. C. A. 128

When an alleged infringing compound fails to respond to the various specific tests of identity which the patentee himself has selected and set forth in his patent, he cannot fairly insist that it is identical with his product.

—Matheson v. Campbell, 78 Fed. 910.....24 C. C. A. 384

When an identifying test has been put into a patent covering a compound or chemical product, by the solicitor, in the absence of his client, and the latter accepts the patent, and applies for no reissue on the ground of mistake, the court, in a suit for infringement, will not, at the patentee's instance, ignore the test altogether, as ridiculous surplusage.

—Matheson v. Campbell, 78 Fed. 910.....24 C. C. A. 384

7. —— Preliminary injunction.

Whenever it is manifest that, on the case made, an injunction will be granted at final hearing, one should be granted preliminarily, in the absence of facts

Digitized by Google

presenting special equities to induce the court, in the exercise of its discretion, to withhold it.

—Allington & Curtis Manuf'g Co. v. Booth, 78 Fed. 878..24 C. C. A. 378

That defendant is merely a user of a patented machine, or that complainants grant no licenses, but manufacture and sell the machines themselves, is no ground for refusing a preliminary injunction against a willful infringer, where the validity of the patent has been previously adjudicated. Under such circumstances, it does not lie with the infringer to say that the patent owner will be fully compensated by a money recovery.

—Allington & Curtis Manuf'g Co. v. Booth, 78 Fed. 878..24 C. C. A. 378

8. Decisions on the validity, construction, and infringement of particular patents.

The following patents for improvement in stone-breaking machines are void, for want of invention, as to the claims specified, namely, the Rusk patent, No. 110,397, claim 1; the Raymond patent, No. 337,320, claim 1; the Gates patent, No. 272,233, claims 1, 2, and 3. Iron Works v. Fraser, 14 Sup. Ct. 883, 153 U. S. 332, followed and applied.

—Birmingham Cement Manufacturing Co. v. Gates Iron Works, 78 Fed. 350.....24 C. C. A. 132

The Brown patent, No. 201,646, *held* not infringed as to claims 1, 2, and 3.

—Birmingham Cement Manufacturing Co. v. Gates Iron Works, 78 Fed. 350.....24 C. C. A. 132

The Collender patent, No. 228,879, for a pool-ball frame with rounded interior and exterior corners, and made of layers of wood bent into triangular shape, and glued or fastened together, the layers preferably breaking joints, is void, as being the result of mere mechanical skill. 76 Fed. 978, affirmed.

—Brunswick-Balke-Collender Co. v. Phelan Billiard-Ball Co., 79 Fed. 85.. 24 C. C. A. 451

The Gates patent, No. 243,545, is void, because of anticipation and prior use, as to claims 3 and 4, which are for combinations of various well-known parts of a stonebreaker, with a loose collar around the shaft and below the diaphragm, to protect the machine from dust and small particles. Iron Works v. Fraser, 14 Sup. Ct. 883, 153 U. S. 332, followed.

—Birmingham Cement Manufacturing Co. v. Gates Iron Works, 78 Fed. 350.....24 C. C. A. 132

The Gates patent, No. 250,656, for improvement in stone-breaking machines, consisting in combinations of a shaft, a bearing for the shaft, a hard-metal plate in the lower end of the shaft, an adjustable sliding step block, and an oil step box, is void, especially as to claims 2, 3, and 4, because of anticipation and prior use. Iron Works v. Fraser, 14 Sup. Ct. 883, 153 U. S. 332, followed.

—Birmingham Cement Manufacturing Co. v. Gates Iron Works, 78 Fed. 350.....24 C. C. A. 132

The Gates patent, No. 259,681, for a "journal bearing for stone and ore crushers," is void, as to claim 1, as being for a combination of old parts without attaining any decidedly new and useful results.

—Birmingham Cement Manufacturing Co. v. Gates Iron Works, 78 Fed. 350.....24 C. C. A. 132

The Gates patent, No. 265,957, for an improvement in stone breakers, consisting in an inclined diaphragm chute, separate from the case of the machine, and having a removable lining to secure durability, is void for want of patentable novelty.

—Birmingham Cement Manufacturing Co. v. Gates Iron Works, 78 Fed. 350.....24 C. C. A. 132

The Fraser patent, No. 278,528, for means for closing and controlling hoistway covers, consisting of a combination of a number of doors, a cord or chain, a number of catches, and a connection between the catch of one door and an adjacent door, so that the closing of the latter will release the

Digitized by Google

former, and admit of its closing, is void, as showing mere mechanical skill in modifying the pre-existing Hackett devices (patent No. 260,675).
—Excelsior Elevator Guard & Hatch Cover Co. v. Foote, 79 Fed. 442.. 24 C. C. A. 673

The Rousseau patent, No. 279,107, for an automatic electric circuit opener or "cut-off," used chiefly in connection with lighting gas jets, *held* to be for an improvement of a secondary character; and the first claim thereof construed, and *held* that the form of the complainant's apparatus which was alleged to have been infringed had been anticipated. 66 Fed. 759, affirmed.
—Rousseau v. Peck, 78 Fed. 113.....24 C. C. A. 7

The Roemer patent, No. 314,724, for an improvement in bag or satchel handles, consisting in a combination of a strap and metal plates, arranged on opposite sides thereof, with the edges of the strap projecting beyond the plates, and a covering secured to such edges, if valid at all, must be confined to the precise devices shown, and is not infringed by a handle having only one metal plate. 71 Fed. 407, affirmed.
—Roemer v. Peddie, 78 Fed. 117.....24 C. C. A. 39

The Hoffman & Weinberg patent, No. 345,901, for a naphthol-black color compound, produced from coal-tar products, construed, and *held* invalid, because it claims an invention or discovery much broader than that actually made. 69 Fed. 597, reversed.
—Matheson v. Campbell, 78 Fed. 910.....24 C. C. A. 384

The Bowling patent (original No. 362,568, reissue No. 11,009), for improvements in stays for garments, consisting in securing the stiffening blade between sheets of rubber projecting beyond the blade both at its ends and edges, the rubber being covered with fabrics of similar dimensions, which are made to adhere thereto by pressure between warm plates, *held* void as to claim 1, for want of patentable invention, in view of the prior state of the art. 72 Fed. 277, affirmed.
—Ypsilanti Dress-Stay Manuf'g Co. v. Van Valkenberg, 78 Fed. 926.... 24 C. C. A. 416

The Bowling patent No. 378,080, for an improvement upon the garment stay covered by patent No. 362,568, to the same inventor (reissue No. 11,009), *held* void for want of invention. 72 Fed. 277, affirmed.
—Ypsilanti Dress-Stay Manuf'g Co. v. Van Valkenberg, 78 Fed. 926.... 24 C. C. A. 416

In the Loewer and Blair patent, No. 407,735, for an improved sole-cutting machine, the main idea is a mere application of the Blanchard invention for turning or cutting irregular forms, and the only novelty resides in the double drive gear applied to the three-part shaft; hence the patent is not infringed by a machine which omits this feature. 74 Fed. 555, reversed.
—Gibbon v. Loewer Sole-Rounder Co., 79 Fed. 325.....24 C. C. A. 612

The Witting patent, No. 414,272, for improvements in dispensing apparatus for soda water, etc., compared with prior devices, especially the Adami and Lippincott apparatus, and *held* invalid as to the second claim, for want of invention and patentable combination. 75 Fed. 680, reversed.
—Green v. American Soda-Fountain Co., 78 Fed. 119.....24 C. C. A. 41

The Thomasson patent, No. 444,561, for an improved poultry crate for shipping live poultry, construed, and *held* not infringed. 74 Fed. 243, affirmed.
—Thomasson v. Bumpass, 78 Fed. 491.....24 C. C. A. 180

In the Osterhout patent, No. 447,791, for an improvement in machines for cutting and stitching buttonholes, claims 21 and 22 are only sustainable by reading into them the jogging or sidewise movement of the stitch mechanism for the purpose of operating the cutter; and neither these claims nor claims 1, 2, 4, 5, 7, 15, and 28 are infringed by a machine made in accordance with the Tebbetts & Doggett patent, No. 438,655, in which the cutter is operated by other means, without any use of the jogging movement. 72 Fed. 185, reversed.
—National Mach. Co. v. Wheeler & Wilson Manuf'g Co., 79 Fed. 432.. 24 C. C. A. 663

Digitized by Google

The King patent, No. 494,960, for a tobacco flavoring machine, consisting of the combination of a rotary flaring drum, a feed hopper emptying into the smaller end of the drum, and a spraying device located within the drum, construed, and *held* not infringed.
—Carter Mach. Co. v. Hanes, 78 Fed. 346.....24 C. C. A. 128

The Roberts reissue, No. 7,341, for an improvement in coal screens and chutes, is not infringed by an apparatus lacking the reservoir which is the principal feature of the Roberts patent, and controlling the flow of coal only by the use of gates at the upper and lower ends of the chute. Excelsior Coal Co. v. Oregon Imp. Co., 16 C. C. A. 219, 69 Fed. 246, reaffirmed.
—Excelsior Coal Co. v. Oregon Imp. Co., 79 Fed. 355....24 C. C. A. 640

The Beach reissue, No. 11,167, for attaching stays to the corners of paper or strawboard boxes *held* infringed by a machine using a grooved roller which was substantially the upper clamping die of the patent. 75 Fed. 840, affirmed.
—Beach v. Inman, 78 Fed. 923.....24 C. C. A. 408

PATENTS ENUMERATED.

ENGLISH.

1,831. Stone breakers, 136
16,854. Nucoa butter, 115

UNITED STATES.

ORIGINAL.

24,268. Stone breakers, 136
50,225. Soda-water fountains, 43
63,675. Stone breakers, 136
84,387. Hoistway covers, 674
110,397. Stone breakers, 132–134
111,239. Stone breakers, 136
111,612. Tobacco flavoring machine, 130
172,666. Tobacco flavoring machine, 129
178,801. Satchel handles, 41
179,584. Soda-water fountains, 43
187,187. Tobacco flavoring machine, 129
195,578. Tobacco flavoring machine, 129
201,646. Stone breakers, 132–134, 142
228,879. Pool-ball frame, 451
237,320. Stone breakers, 133
243,545. Stone breakers, 132, 133, 135, 140–142
246,608. Stone breakers, 133
249,009. Tobacco flavoring machine, 129
250,656. Stone breakers, 132, 133, 135
259,681. Stone breakers, 132, 133, 136, 141
260,675. Hoistway covers, 673, 675
265,957. Stone breakers, 132, 133, 138
272,233. Stone breakers, 132–134, 139–142
278,528. Hoistway covers, 673
279,023. Automatic electric circuit breakers, 8
279,107. Automatic electric circuit breakers, 7
283,303. Automatic electric circuit breakers, 8
305,172. Stone breakers, 133
314,724. Satchel handles, 39, 40
316,594. Soda-water fountains, 43, 44
317,461. Tobacco flavoring machine, 129
337,320. Stone breakers, 132
345,901. Color compounds, 385
362,568. Garment stays, 416
375,452. Soda-water fountains, 43
378,080. Garment stays, 416
407,735. Sole-cutting machines, 612
414,272. Soda-water fountains, 41, 42
438,655. Buttonhole machines, 663
444,561. Poultry crates, 180
447,791. Buttonhole machines, 663
494,960. Tobacco flavoring machine, 128

REISSUED.

5,387. Hoistway covers, 674
7,341. Coal screens, 640
11,009. Garment stays, 416
11,167. Paper-box machine, 408

PAYMENT.

Recovery back, see "United States," 1.

PILOTS.

Negligence of, see "Shipping," 4.

PLEADING.

In equity, see "Equity," 3.
In suit to foreclose mortgage, see "Mortgages," 3.

Digitized by Google

Demurrer—Judgment.
Under the practice at common law prevailing in Tennessee, when a plaintiff succeeds upon an issue joined on a plea in abatement the proper judgment is peremptory that the plaintiff recover.
—National Acc. Soc. v. Spiro, 78 Fed. 774.....24 C. C. A. 334

PRACTICE IN CIVIL CASES.

In equity, see "Equity," 3, 4.

PREFERENCES.

By corporations, see "Corporations," 4.

PRESCRIPTION.

Rights acquired by, see "Adverse Possession," 1.

PRINCIPAL AND AGENT.

See, also, "Factors"; "Shipping," 3, 4.

The relation—Evidence.
The authority of an agent cannot be shown by proof of his admissions, but such proof is not prejudicial where the agency in question is abundantly proved in other ways.
—Union Guaranty & Trust Co. v. Robinson, 79 Fed. 420..24 C. C. A. 650

PRINCIPAL AND SURETY.

Bond of agent of foreign corporation, see "Corporations," 6.
—— of indemnity, see "Indemnity"; "Judgment."
Execution of bond, see "Bonds."

PRIVILEGED COMMUNICATIONS.

See "Evidence," 1; "Libel and Slander," 1.

PROCESS.

Liability for failure to issue, see "Clerks of Courts."
Waiver of, see "Equity," 2.

PROTEST.

Against payment of duties, see "Customs Duties," 4.

PUBLIC LANDS.

Appropriation of water rights, see "Waters and Water Courses."

Disposal of lands of the states—Texas.
In the absence of objection by the proper political authority, a grant of land should not be displaced by a junior grant, nor declared void, simply

Digitized by Google

because, according to the lines of the survey, it contains more land than the state intended to grant.

—White v. Blum, 79 Fed. 271.....24 C. C. A. 573

Upon an examination of the evidence as to the boundaries of the grant in question in this case, *held*, that the fact that the lines of the survey, as laid down in the field notes, included more land than the state was authorized to grant for the purpose intended, furnished no reason for reversing the calls of the survey and altering one of the lines, so as to diminish the quantity of land, especially when such change would result in unsettling the titles of many persons who have paid value for the land, and held it for many years.

—White v. Blum, 79 Fed. 271.....24 C. C. A. 573

RAILROADS.

Lien of railway mortgage, see "Mortgages," 1.

1. Leases—Rights of creditors.

Where the M. Ry. Co., holding a majority of the stock of the L. Ry. Co., caused a lease of the latter's road to be made to it, *held*, that the M. Co. could acquire no benefit, as against the creditors of the L. Co., by taking the lease while that company was insolvent, and would be bound to account to a creditor for any profits; but, there being no profits, a bill by a creditor for an accounting was properly dismissed.

—Sidell v. Missouri Pac. Ry. Co., 78 Fed. 724.....24 C. C. A. 216

When the lessee of a railroad is bound to pay rent to the lessor, a decree for its payment to a creditor may be appropriate; but, if such rent is to be paid to holders of coupons, which are a lien on the earnings, and which are guaranteed by the lessee, no such decree can be made.

—Sidell v. Missouri Pac. Ry. Co., 78 Fed. 724.....24 C. C. A. 216

2. Liens and mortgages—Priorities.

A judgment creditor of a railroad corporation, whose claim originated in the negligent act of the corporation's servants, is not entitled to be paid in preference to the holders of pre-existing liens upon the corporation's property.

—Farmers' Loan & Trust Co. v. Northern Pac. R. Co., 79 Fed. 227.... 24 C. C. A. 511

Money loaned to a railroad company on its notes at various times, ranging from about nine months to over four years before the appointment of a receiver, with the purpose and result of keeping its road in safe running order, increasing its property and business, and rendering the same more valuable to the bondholders, and maintaining its credit, is nevertheless not a debt which is entitled to a preference over the mortgage bonds, upon the appointment of a receiver. Lackawanna Iron & Coal Co. v. Farmers' Loan & Trust Co., 24 C. C. A. 487, 79 Fed. 202, followed.

—Morgan's Louisiana & T. R. & S. S. Co. v. Farmers' Loan & Trust Co., 79 Fed. 210.....24 C. C. A. 495

The purchase by a railroad company, under contracts made from about sixteen months to over two years before the appointment of a receiver, of some 20,000 tons of steel rails, to replace the old and deteriorated rails with which its tracks were laid, to be paid for by its notes, due in six months, renewable for six months longer at the railroad company's option, is not a purchase of supplies in the ordinary operation of the road to keep it a going concern, so as to authorize the court appointing the receiver to give the debt a preference over the mortgage debt.

—Lackawanna Iron & Coal Co. v. Farmers' Loan & Trust Co., 79 Fed. 202.....24 C. C. A. 487

Money advanced to a railroad company at various times to pay floating debts and interest coupons, and bonds loaned it to be pledged for the price of necessary rails to be purchased, and which bonds it is unable to return,

Digitized by Google

do not constitute a debt which is entitled to a preference over the mortgage bonds upon the appointment of a receiver in foreclosure proceedings. Lackawanna Iron & Coal Co. v. Farmers' Loan & Trust Co., 24 C. C. A. 487, 79 Fed. 202, followed.
—Southern Development Co. v. Farmers' Loan & Trust Co., 79 Fed. 212.....24 C. C. A. 497

3. —— Foreclosure—Distribution of proceeds.
A reorganization committee, broadly authorized to procure the sale of an insolvent railway, compound claims against such railway, and pledge the bonds deposited with it, is authorized to agree with holders of apparent claims against such railway for an assignment of the claims, and to pledge the bonds in its hands to secure the sums promised to be paid for such assignment, and the holders of the claims, if not paid as agreed, are entitled to be paid out of the proceeds of the sale of the road under foreclosure applicable to the bonds.
—Central Trust Co. v. Carter, 78 Fed. 225.....24 C. C. A. 73

4. —— Rights of purchasers.
A purchaser of a railroad at foreclosure sale, who resists the confirmation of the sale, and ultimately procures the setting aside of a decree of confirmation, and a release from his bid, is not entitled to be paid, out of the trust fund, his attorney's fees and expenses incurred in that behalf, but can only receive the ordinary taxable costs; and it is immaterial that the services of his counsel may have incidentally benefited the fund.
—Farmers' Loan & Trust Co. v. Green, 79 Fed. 222; Green v. Farmers' Loan & Trust Co., Id.....24 C. C. A. 506

On the foreclosure sale of a railroad, then in possession of a receiver, one division of the road was sold subject to a prior mortgage, which expressly secured to the bondholders the net income of the property after default in interest. While the road was still in possession of the receiver, a suit was brought to foreclose this senior mortgage, and the existing receiver was also appointed as receiver in that suit, and continued in possession until the sale, some years later, under the senior mortgage. *Held*, that the purchaser at the first sale was not entitled to the net earnings of the division covered by the senior mortgage, which had accumulated in the hands of the receiver, after his appointment in the second suit, but the same belonged to the bondholders under the terms of the mortgage.
—Downs v. Farmers' Loan & Trust Co., 79 Fed. 215....24 C. C. A. 500

5. Receivers—Claims.
A receiver of a railroad having been appointed in a foreclosure suit, with instructions to pay, out of moneys and income in his hands, for supplies and operating expenses, and for expenses of operation during the six months previous to the receivership, another railroad company presented an intervening petition in the suit, setting up a contract with the insolvent railroad company to furnish it with terminal facilities at a stipulated rental, alleging that such facilities had been used up to the appointment of the receiver, and by him after his appointment, and claiming a preference, for the rental due, over the mortgage debt. *Held*, that as the intervener, whether entitled to its whole claim or not, was at least entitled to a fair rental for the time during which its terminal facilities were used by the receiver, it was error to sustain a demurrer to the whole petition.
—Savannah, F. & W. Ry. Co. v. Jacksonville, T. & K. W. Ry. Co., 79 Fed. 35.....24 C. C. A. 437

6. Operation—Accidents at crossings.
In an action against a railroad company for alleged negligence in running over the plaintiff while crossing its tracks at a highway crossing, the defendant is entitled to have the jury specifically instructed as to the duty of the plaintiff, under such circumstances, to look and listen for a train, before attempting to cross the track, especially when the plaintiff's own testimony suggests that he may have been negligent in this respect; and a general charge that the plaintiff was bound to act as a prudent man would do under the cir-

Digitized by Google

cumstances, leaving it for the jury to fix the standard of prudence, is not sufficient.

—Grand Trunk Ry. Co. of Canada v. Cobleigh, 78 Fed. 784..... 24 C. C. A. 342

7. —— Injuries to persons on track.

B. was an employé of a lumber company, engaged in handling lumber at its sheds, situated on both sides of a spur track leading from defendant's line of railroad. The spur was built on land of the lumber company for the purpose of enabling the defendant railroad company to reach the lumber company's mill, and take away lumber. It was the custom of the lumber company's employés, including B., to place a tramway across the track from one shed to the other, when the track was not in use, and to remove it by getting down on the track, and pushing it out of the way, when a train entered the spur. The railroad company's switching crew, who moved trains in and out of the spur, knew of this custom of the lumber company's employés. *Held*, that B. and his fellow employés, while on the spur track, engaged in moving the tramway out of the way of a train entering the spur, were not trespassers, and the railroad company was under an obligation to them to exercise ordinary care in moving its engines and cars so as to avoid injuring them.

—St. Louis & S. F. Ry. Co. v. Miles, 79 Fed. 257.....24 C. C. A. 559

While B. and other employés of a lumber company were engaged in handling lumber at its sheds located on both sides of a spur track, built on the company's land to enable defendant railroad to reach the lumber company's mill, a switching engine entered the spur from the main track to remove some cars of lumber, and the switching crew left the switch open behind it, though they knew a fast train would be due at the switch in a few minutes. While the switching engine stood on the spur, and B. and his fellow employés, who were ignorant of the condition of the switch, were moving the tramway out of its way, the fast train ran into the open switch, collided with the switching engine, and drove it upon B., killing him. *Held*, that the gross negligence of the switching crew in leaving the switch open was the sole cause of the accident, which could not have been prevented by any precaution B. was bound to take with reference to the presence of the switching engine, and there was no question of contributory negligence in the case.

—St. Louis & S. F. Ry. Co. v. Miles, 79 Fed. 257.....24 C. C. A. 559

RECEIVERS.

Action against, see "Master and Servant," 2.
Appeal from order appointing, see "Appeal and Error," 1.
Of national banks, see "Banks and Banking," 5.
Of railroad companies, see "Railroads," 2, 3, 5.

RECORDS.

On appeal, see "Appeal and Error," 5.

REPAIRS.

See "Maritime Liens"; "Shipping," 3.

RES GESTAE.

See "Evidence," 1.

SALES.

1. Construction of contract—Price.

Under a contract for the sale of coke at 90 cents per ton, "said price to continue until there may be a general advance in the market price of coke,

Digitized by Google

then and in that event the price to be the lowest rate at which coke is sold to the larger and better consumers of coke in the market," the expression "general advance in the market price of coke," must be regarded as meaning a general advance over the 90 cents per ton named in the contract, and not a general advance over what was the market price of coke at the time the contract was made.
—Spang v. Rainey, 79 Fed. 250.....24 C. C. A. 551

In determining whether there has been "a general advance in the market price of coke," within the meaning of the contract, proper regard must be given to all the different ways in which coke is bought and sold, and the advance, to constitute a general one, must be such according to the trade acceptation, and the general understanding of buyers and sellers, and not a special advance by a limited number of dealers, or by a combination taking advantage of the necessities of a limited class of customers.
—Spang v. Rainey, 79 Fed. 250..... .24 C. C. A. 551

The obligation to pay plaintiff the lowest rate paid by the larger and better consumers does not mean absolutely the lowest rates paid by any consumer, but the lowest rates prevailing among such consumers in general.
—Spang v. Rainey, 79 Fed. 250.....24 C. C. A. 551

2. Warranty.
Defendant made a contract with plaintiffs to purchase from them two boilers of a certain kind, particularly described in the specifications attached to the contract, such boilers to be set up by plaintiffs in defendant's hotel at Kansas City. After the boilers were set up, it was found that the muddy water of the Missouri river, which was the only source of water supply, caused a sediment to form, which rendered the boilers useless. *Held* that, though the plaintiffs knew that the water of the Missouri would necessarily be used in the boilers, and knew its character, yet, as defendant had contracted for a definite, known kind of boilers, there was no implied warranty on plaintiffs' part that they would operate successfully with the muddy water of the Missouri.
—Grand Avenue Hotel Co. v. Wharton, 79 Fed. 43.....24 C. C. A. 441

SET-OFF AND COUNTERCLAIM.

In action against stockholder, see "Corporations," 3.
—— United States, see "United States," 3.

SHIPPING.

See, also, "Collision"; "Maritime Liens."

1. Charters—Liability of parties.
When, by a charter, the shipowner undertakes to act as a carrier of goods, and appoints the master and crew, the responsibility for her safe navigation rests on him; but when the ship is completely transferred for a period of time, and the owner has nothing to do with the appointment of officers and crew, then the charterer becomes responsible for her navigation.
—Bramble v. Culmer, 78 Fed. 497.....24 C. C. A. 182

When the charterers are to pay a lump sum to the owners, and defray port and pilotage charges, and the owners select and pay the master and crew, the mere fact that the charterers, at a port where no compulsory pilotage laws are in force, furnish a pilot, whose services are accepted by the master, does not make them responsible for the loss of the vessel through his incompetence or negligence.
—Bramble v. Culmer, 78 Fed. 497.....24 C. C. A. 182

2. Master—Appointment.
When one is acting as master by appointment of the real owner, his status and authority as such are not affected by the fact that his name has not

Digitized by Google

been inserted as master in the enrollment, for the registry and enrollment are only for the protection of the revenue.

—Davidson v. Baldwin, 79 Fed. 95.....24 C. C. A. 453

3. Liabilities of vessels and owners in general—Supplies.

One who purchases a vessel at marshal's sale, takes the legal title, and is registered as owner at the customhouse, but who, in fact, purchases for another, and holds the title merely as collateral security for a debt, is a mere mortgagee; and if he is not in possession, and does not appoint the master, he is not personally liable for repairs or supplies furnished on the order of the master. And when it is sought to hold him liable he is not estopped from showing his true relation to the vessel.

—Davidson v. Baldwin, 79 Fed. 95.....24 C. C. A. 453

B. was the registered owner of a vessel, but in fact held the legal title as security for a debt. R. & Sons were the real owners, and R. was enrolled as master, and had full possession and control. Without changing this enrollment, he appointed one M. as master, himself doing the business of the vessel, as managing partner of R. & Sons. As such, he ordered repairs of libelants, they understanding that he did so simply as "manager." *Held*, that on these facts, in the absence of any other evidence of a holding out by B. of R., as his manager, B. was not estopped from denying that R. was his agent.

—Davidson v. Baldwin, 79 Fed. 95.....24 C. C. A. 453

In the home port, where all the owners reside, the managing owner, though registered as such at the customhouse, cannot, merely by virtue of that relation, order supplies, and bind his co-owners to a personal liability therefor; nor do they become liable merely because the creditor, on his books, charges the supplies against the vessel "and owners."

—Spedden v. Koenig, 78 Fed. 504.....24 C. C. A. 189

4. —— Negligence of pilot.

A pilot is so far the agent of the vessel that whoever is responsible for her navigation is responsible for his acts or omissions in the line of his duty; and unless there is some express contract, or some facts warranting implications or understandings contrary to uniform usage, the pilot must be considered the servant of the owner.

—Bramble v. Culmer, 78 Fed. 497.....24 C. C. A. 182

5. Carriage of goods—Loss or injury.

Damage to a cargo of fertilizers, shipped on a barge from Baltimore to Norfolk, by sea water getting in through the hatches during a severe but not unusual storm, *held* to be attributable to negligent calking of the hatches and failure to cover them with tarpaulin battened down, as was customary with such cargoes, rather than to the "perils of the sea."

—The Glide, 78 Fed. 152; Hudson v. Grafflin, Id.....24 C. C. A. 46

6. General average—Perils and acts grounds of contribution.

A steamship bound for New York discovered a crack in her shaft when about 316 miles from Sandy Hook. The shaft was strengthened by bolts, and she proceeded at reduced speed until 16 miles from Sandy Hook, when the shaft broke and greatly damaged the machinery. Contribution was claimed on the ground that the risk to the ship was foreseen, and deliberately undertaken in order to save the ship and cargo the great expense of towage. The evidence showed, however, that, while the officers recognized the possibility of a new breakdown and further damage, they confidently believed that it could be avoided. *Held*, that there was no such voluntary sacrifice of the ship to save cargo as was necessary to make a case of general average. 70 Fed. 251, affirmed.

—Van Den Toorn v. Leeming, 79 Fed. 107.....24 C. C. A. 461

STATUTES.

Construction of custom laws, see "Customs Duties," 1.
Effect of state statute on remedy, see "Admiralty."

Digitized by Google

Subjects and titles of acts.

The legislature of New Jersey, in 1861, by an act entitled "An act to authorize the construction of a dock or wharf on Toms River," authorized H. & D. to "erect and maintain" a dock or wharf in front of their lands on Toms river, to collect wharfage for the use thereof, and to hold and enjoy the same, to themselves, their heirs and assigns. *Held*, that the object of the act was sufficiently expressed in its title, under article 4, § 7, cl. 4, of the constitution of New Jersey.

—Roberts v. Brooks, 78 Fed. 411.....24 C. C. A. 158

STATUTES CONSTRUED.

UNITED STATES.

STATUTES AT LARGE.

1842. Aug. 23, ch. 188, 5 Stat. 518.. 467
1887, March 3, ch. 359, 24 Stat. 505, 506..... 649
1887, March 3, ch. 373, 24 Stat. 552 196
1888, Aug. 13, ch. 866, 25 Stat. 436 196
1890, June 10, ch. 407, § 19, 26 Stat. 139 127
1890, Oct. 1, ch. 1244, 26 Stat. 567.. 349
1890, Oct. 1, ch. 1244, § 1, Schedule A, par. 19, 26 Stat. 567..... 604
1890, Oct. 1, ch. 1244, Schedule A, pars. 75, 76, 26 Stat. 570..... 604
1890, Oct. 1, ch. 1244, § 1, Schedule B, par. 76, 26 Stat. 570..... 121
1890, Oct. 1, ch. 1244, § 1, Schedule N, 26 Stat. 599..... 127
1890, Oct. 1, ch. 1244, § 2, Free List, par. 493, 26 Stat. 603..... 116
1890, Oct. 1, ch. 1244, § 2, Free List, par. 651, 26 Stat. 607..... 4
1890, Oct. 1, ch. 1244, § 2, Free List, par. 749, 26 Stat. 610..... 121
1890, Oct. 1, ch. 1244, § 4, 26 Stat. 613 4
1891, March 3, ch. 1244, § 5, 26 Stat. 827 195
1891. March 3, ch. 517, § 6, 26 Stat. 828. .....195, 449
1891, March 3, ch. 517, § 7, 26 Stat. 828..... 195
1894, Aug. 27, ch. 349, par. 88, 28 Stat. 513 606
1894, Aug. 27, ch. 349, par. 181, 28 Stat. 521 449
1894, Aug. 27, ch. 349, par. 230, 28 Stat. 524 113
1894, Aug. 27, ch. 349, par. 257, 28 Stat. 529 346
1894, Aug. 27, ch. 349, par. 276, 28 Stat. 530..... 346
1894, Aug. 27, ch. 349, par. 568, 28 Stat. 542 .....113, 114
1894, Aug. 27, ch. 349, par. 676, 28 Stat. 546 449
1894, Aug. 27, ch. 349, § 3, 28 Stat. 547 114

REVISED STATUTES.

§ 700 374
§ 862 467
§§ 2500, 3330..... 123
§ 3477..... 1

ARKANSAS.

SANDELS & HILL'S DIGEST.

§ 4133 651

NEW JERSEY.

CONSTITUTION.

Art. 4, § 7, cl. 4..... 158

LAWS.

1861, Feb. 28, ch. 5, p. 95..... 158

NEW YORK.

CODE OF CIVIL PROCEDURE.

§ 390 539

OHIO.

LAWS.

1890, April 2, p. 149..... 280

PENNSYLVANIA.

LAWS.

1874, April 22, p. 108, § 2..... 11

TENNESSEE.

CODE 1858.

§§ 2291, 2292..... 321

LAWS.

1875, March 23, ch. 142, p. 236, § 5 426
1883, March 27, ch. 163, p. 212... 426

TEXAS.

REVISED STATUTES 1895.

Art. 2222 et seq..... 369
Art. 2432 380

Digitized by Google

STOCK.

See "Corporations," 1, 2.

STOCKHOLDERS.

See "Banks and Banking," 3; "Corporations," 2–5.

SUBSCRIPTIONS.

To corporate stock, see "Corporations," 2, 3.

TAXATION.

Presumption of payment of tax, see "Corporations," 1.
Tax deed as color of title, see "Adverse Possession," 2.

Levy and assessment—Ascertaining ownership of property.

In ascertaining the ownership of property for the purposes of taxation, the record title, in the absence of actual knowledge, must control. It is unnecessary for the assessing officer to investigate all matters pertaining to the ownership of the property or the validity of the record, but he has the right to act upon the appearance of title as shown by such record.

—State Trust Co. v. Chehalis County, 79 Fed. 282.....24 C. C. A. 584

In ascertaining the ownership, for the purposes of taxation, of property actually within a county, but alleged to be merely in transitu, so as to be exempt from taxation within such county, there must be at least an intention and fixed purpose to remove it within a reasonable time; and an intention to remove it at some future time, depending upon certain contingencies which may or may not happen, is wholly insufficient.

—State Trust Co. v. Chehalis County, 79 Fed. 282.....24 C. C. A. 584

When a bill of sale of personal property, absolute on its face, and apparently conveying the title to such property to the grantee, has been placed on record, and such property has not been listed by the owner to the taxing officer, such officer, acting under a statute requiring him, in the absence of listing by the owner, to make a return from the best information he can obtain, may properly assess such property to the record owner, if he has no actual knowledge of a different ownership; and the validity of the assessment is not affected by proof that the recorded bill of sale was in fact intended as a mortgage, or that the property actually belonged to another person than the grantee.

—State Trust Co. v. Chehalis County, 79 Fed. 282.....24 C. C. A. 584

TENDER.

As affecting right to interest, see "Interest."

TIME.

To appeal, see "Appeal and Error," 4.

TOWAGE.

Collision with vessels in tow, see "Collision," 1.

TOWNS.

Bonds—Enforcing payment.

The charter of the town of D. authorized it to levy taxes, without limit, for the use of the town, and also provided that, if it should issue bonds in aid

Digitized by Google

of a railroad, it might levy an additional tax, sufficient to pay the interest thereon, not exceeding 50 cents on the $100 of taxable property. *Held*, that the special fund which might be created by such additional tax was not the sole fund for the payment of interest on the bonds, but, such bonds and the coupons thereon being debts of the town, the holders thereof were entitled to payment out of the general funds of the town, after exhausting such special fund, and the levy of a tax sufficient to pay such debts might be compelled by mandamus.
—Town of Darlington v. Atlantic Trust Co., 78 Fed. 596..24 C. C. A. 257

TRADE-MARKS AND TRADE-NAMES.

1. Names subject of ownership.
Where a firm has for many years used the name of its predecessors in connection with its goods, and has built up an extensive trade thereunder, such name, even if it could not be used as a trade-mark, is to be treated as a descriptive term, to the benefit of which they are entitled.
—Garrett v. T. H. Garrett & Co., 78 Fed. 472.....24 C. C. A. 173

2. Infringement—What constitutes.
While it is true, in the abstract, that every one has a right to use white paper, yet no one has a right to use it in such a way as to imitate another's labels, and thereby appropriate the good will of his business.
—Garrett v. T. H. Garrett & Co., 78 Fed. 472.....24 C. C. A. 173

3. —— Injunction.
The use by a manufacturer of imitative labels and devices, in connection with an inferior article, which is sold to retailers at a reduced price, with the purpose and result of enabling them to sell it to consumers as the goods of another, will be enjoined.
—Garrett v. T. H. Garrett & Co., 78 Fed. 472.....24 C. C. A. 173

Where a corporation organized to manufacture and sell snuff had assumed the name of an employé holding a few shares of its stock, with the evident purpose of appropriating the trade of others of the same name, who had long used the name in connection with their snuff, *held*, that such corporation would be enjoined from using the name as part of its corporate name, or in its business.
—Garrett v. T. H. Garrett & Co., 78 Fed. 472.....24 C. C. A. 173

TRESPASS TO TRY TITLE.

Evidence.
In an action of trespass to try title, in which a substantial issue is the good faith of a conveyance under which the plaintiff claims, the transactions of all the parties touching the land in controversy become material, and deeds purporting to be made under a power of attorney given by the plaintiff are entitled to be considered by the jury, upon the question of good faith, whether or not such power is in a form to make the deeds executed under it sufficient to raise an outstanding title.
—White v. Thacker, 78 Fed. 862.....24 C. C. A. 374

TRIAL.

See, also, "Appeal and Error"; "Evidence."
In equity, see "Equity," 4.
Instructions to jury, see "Death," 3; "Insurance," 6; "Libel and Slander," 4; "Master and Servant," 5; "Negligence."
Power to set aside verdict, see "New Trial."
Province of court and jury, see "Libel and Slander," 3.

1. Direction of verdict—When proper.
A peremptory instruction should not be given to a jury unless, upon a survey of the whole evidence, and giving effect to every inference to be fairly

Digitized by Google

or reasonably drawn from it, the case is palpably for the party asking such instruction; and a case cannot properly be withdrawn from the jury because, in the judgment of the court, there is a preponderance of evidence in favor of the party asking such instruction. Railway Co. v. Lowery, 20 C. C. A. 596, 74 Fed. 463, reaffirmed.

—Travelers' Ins. Co. of Hartford v. Randolph, 78 Fed. 754..24 C. C. A. 305

2. —— **Time of request.**

The failure of a defendant, at the close of the plaintiff's evidence, to ask a peremptory instruction, will not of itself preclude such a motion at the close of the whole evidence.

—Travelers' Ins. Co. of Hartford v. Randolph, 78 Fed. 754..24 C. C. A. 305

3. —— **What constitutes.**

When the court, in the presence of the jury, has said to counsel that it had expected a request to direct a verdict for the plaintiff, but, if counsel preferred to have the case submitted to the jury under instructions prepared by them, the court would so submit it, but would set aside any other verdict than one for the plaintiff, such action is equivalent to a direction to return a verdict for the plaintiff, and will be so treated by an appellate court.

—White v. Blum, 79 Fed. 271.....24 C. C. A. 573

4. **Instruction to jury.**

A requested charge, directing the jury to remember that plaintiff "is the most interested party in the controversy," that they are to receive his testimony with caution, and are empowered "to reject any evidence which is uncorroborated, even though it be uncontradicted," is properly refused.

—Coloritype Co. v. Williams, 78 Fed. 450.....24 C. C. A. 163

Defendant submitted a written request, marked "E," containing manifestly objectionable clauses, and after the general charge orally asked the court to give his request, marked "E," repeating it with slight verbal changes, which, however, much modified its objectionable features. *Held*, that the court was warranted in inferring that he referred to the request as written, and in refusing to give it.

—Coloritype Co. v. Williams, 78 Fed. 450.....24 C. C. A. 163

The giving of an instruction that positive evidence is entitled to more weight than negative always rests largely in the discretion of the court, and it is certainly not error to decline to give such instruction in a case in which witnesses have testified as positively on the one side that a thing did not occur as on the other side that it did.

—Denver & R. G. R. Co. v. Lorentzen, 79 Fed. 291....24 C. C. A. 592

While, in a simple case, involving only the issues of negligence of the defendant and contributory negligence of the plaintiff, it is better for the court to give a few terse and pointed instructions upon what constitutes the one and the other, yet if the instructions given are unnecessarily voluminous, and unnecessarily and improperly multiplied upon the same points, it is not permissible to select particular clauses, and consider them apart from their context, but the instructions must be taken as a whole, and if, so taken, the jury have been fairly instructed, no error can be justly affirmed.

—Northern Pac. R. Co. v. Lynch, 79 Fed. 268.....24 C. C. A. 570

5. **Verdict—Sealed verdict.**

In civil cases the court may, in its discretion, without regard to the consent or objection of the parties, authorize a jury to agree upon, seal, and bring in and present to the court a sealed verdict.

—Bunker Hill & S. Mining & Concentrating Co. v. Schmelling, 79 Fed. 263.....24 C. C. A. 564

TROVER AND CONVERSION.

Waiver of liability.

The United States government seized certain logs, alleged to have been wrongfully cut by defendants on an Indian reservation. A contract was

Digitized by Google

then made under which, without affecting the rights of either party or the government's possession, the logs were to be removed to a boom. After their removal, the defendants gave bond to pay any judgment recovered by the government, reciting a purpose to have the logs manufactured into lumber in order to preserve the property for all parties. After the logs were sawed, the defendants sold the lumber and took the proceeds. *Held*, that the government did not, by accepting the bonds, agree to relinquish its rights in the logs or consent that the lumber made from them might be sold by the defendants for their own benefit, and, upon proving that the logs were wrongfully cut, it would be entitled to recover from the defendants for a conversion thereof, and not merely for a trespass on the Indian reservation.
—United States v. Pine River Logging & Improvement Co., 78 Fed. 319 .....24 C. C. A. 101

TRUSTS.

Enforcement of trust—Right to follow trust property.
S., who held a mortgage as special guardian and trustee for his children, received a payment on the mortgage in a check payable to him as guardian, which he turned over to his wife, who deposited it in her bank, and afterwards returned a part of the sum to S., and expended a part under his direction for the maintenance of the children. S. claimed a right to the proceeds of the mortgage as his own, which his wife knew; but, it being afterwards held that he was not so entitled, also *held*, in a suit by the successor of S., appointed after his death, against S.'s widow, that she was chargeable with knowledge that the money was a trust fund, and was accountable for all of it but that returned to S., the principal of the trust fund not being applicable to the maintenance of the beneficiaries, and the widow being chargeable with knowledge of that fact.
—Pennington v. Smith, 78 Fed. 399.....24 C. C. A. 145

UNITED STATES.

Assignment of claim against, see, also, "Assignments."

1. **Payment by mistake—Right to recover back.**
The rule applied that the United States have the right to recover moneys paid by the errors of their disbursing officers, as much where the error is one of law as of fact, provided only the moneys belong to the United States ex æquo et bono.
—United States v. Saunders, 79 Fed. 407.....24 C. C. A. 649

2. **Claims against United States—Assignment.**
Money taken from one arrested for larceny from a post office was retained by the inspector under the erroneous supposition that it was the money stolen. *Held*, that an order by the prisoner to the inspector to pay it to a third person was not an assignment of a claim against the United States, within Rev. St. § 3477, requiring such assignments to be made in the presence of witnesses, and after the allowance of the claim.
—United States v. Ferguson, 78 Fed. 103.....24 C. C. A. 1

3. **Actions against the United States—Set-off or counterclaim.**
Under the act of March 3, 1887 (24 Stat. 505, 506), providing for the bringing of suits against the United States, the court has power to render judgment in favor of the United States for any balance which may be found due them upon a set-off or counterclaim.
—United States v. Saunders, 79 Fed. 407.....24 C. C. A. 649

VERDICT.

Direction of, see "Trial," 1-3.
Power to set aside, see "New Trial."
Sealed verdict, see "Trial," 5.

Digitized by Google

WAIVER.

Of conversion, see "Trover and Conversion."
Of process, see "Equity," 2.

WARRANTY.

In insurance policies, see "Insurance," 3, 4.
In sales, see "Sales," 2.

WATERS AND WATER COURSES.

Appropriation of rights in public lands—By nonriparian owners.
Miners and others, in the region where the artificial use of water is an absolute necessity, have the right, though not riparian proprietors, to appropriate for mining, irrigation, etc., the waters of nonnavigable streams flowing through the public lands, so far as not already appropriated by others; and the previous establishment of a government reservation below the point of appropriation does not affect the right, except so far as the waters of the stream have been previously appropriated for the use of such reservation. Gilbert, Circuit Judge, dissenting.
—Krall v. United States, 79 Fed. 241.....24 C. C. A. 543

WHARVES.

1. **Grant of right to construct.**
A legislative grant of a right to construct a wharf need not be supplemented by a formal instrument under the seal of the state.
—Roberts v. Brooks, 78 Fed. 411.....24 C. C. A. 158

A legislative grant of the right to construct a wharf, collect wharfage, and hold and enjoy the wharf, is sufficient, under the law of New Jersey to convey a fee in the wharf.
—Roberts v. Brooks, 78 Fed. 411.....24 C. C. A. 158

A grant to H. and D. of a right to construct a wharf in front of their land is not void for uncertainty if exactness of location is supplied by the building of the dock.
—Roberts v. Brooks, 78 Fed. 411.....24 C. C. A. 158

When a grant is made to H. and D. of a right to construct a wharf in front of their lands, the fact that the title of the upland was in H. alone does not affect the title of their grantee of the wharf after 35 years' possession.
—Roberts v. Brooks, 78 Fed. 411.....24 C. C. A. 158

2. **Accretions.**
Absolute ownership of the dock and the shore being shown, a small piece of land, formed by accretion, in the angle between the dock and the shore, belongs to the shore owners. 71 Fed. 914, affirmed.
—Roberts v. Brooks, 78 Fed. 411.....24 C. C. A. 158

WILLS.

1. **Rights of devisees and legatees—Advancements.**
The will of M. gave his estate, in equal shares, to his four children and a grandchild, and directed that any advances to them, made or to be made, should be treated as gifts, and not in any manner to be accounted for. *Held*, that the dominating purpose of the will was to secure an equal division of what property the testator should leave, irrespective of advances; and, while a debt from a legatee might be created which would be independ-

Digitized by Google

ent of the absolution accorded by the will, to establish such a debt would require clear proof of a distinct purpose to do so on the part of the testator.
—Cowen v. Adams, 78 Fed. 536.....24 C. C. A. 198

2. —— **Enforcement of rights.**
Where a will directed all debts from the legatees to be canceled, *held*, that the receipt by a legatee, from the administrators executing the will, of collaterals for debts owed to the testator, did not estop such legatee to dispute a receipt taken by such administrators for his share of the estate, by its application to such debts; and, in view of the position of trust in which the administrators stood to the legatee, such receipt, which he was under no legal obligation to give, would not be permitted to stand in the way of the enforcement of the legatee's rights in the estate.
—Cowen v. Adams, 78 Fed. 536.....24 C. C. A. 198

In a suit by the assignee of a legatee under a will against the administrators with the will annexed to set aside a receipt given by such legatee for his share, and to establish his right to an interest in the estate, the other legatees are not necessary parties.
—Cowen v. Adams, 78 Fed. 536.....24 C. C. A. 198

Digitized by Google

Digitized by Google

TABLES OF C. C. A. CASES

APPEARING IN THE

UNITED STATES CIRCUIT COURTS OF APPEALS REPORTS.

VOL. 30, U. S. APPEALS REPORTS.

(5th Circuit.)

Page

Abraham v. Levy (72 F. 124; 18 C. C. A. 469) 713
Adams v. Mercantile Trust Co. (66 F. 617; 15 C. C. A. 1) 204
Alabama G. S. R. Co. v. O'Brien (69 F. 223; 16 C. C. A. 216) 308
Alabama & G. Manuf'g Co. v. Robinson (72 F. 708; 19 C. C. A. 152) 683
American Freehold Land Mortg. Co. of London v. Thomas' Adm'r (71 F. 782; 18 C. C. A. 327) 690
Amity, The (69 F. 110; 16 C. C. A. 170) .. 304
Anderson v. Howard (69 F. 84; 16 C. C. A. 149) 350

Baylor v. Scottish American Mortg. Co. (66 F. 631; 13 C. C. A. 659) 761
Belle of the Coast, The (69 F. 112; 15 C. C. A. 699) 761
Blum v. Bowman (66 F. 883; 14 C. C. A. 158) 50
Booth v. J. L. S. Hunt (69 F. 220; 16 C. C. A. 214) 343
Bridgeport Electric & Ice Co. v. Meader (69 F. 225; 15 C. C. A. 694) 580
Building & Loan Ass'n of Dakota v. Logan (66 F. 827; 14 C. C. A. 133) 163
Bush v. Faris (71 F. 770; 18 C. C. A. 315) 626

Chattanooga Medicine Co. v. Thedford (66 F. 544; 14 C. C. A. 101) 35
City of Columbus v. Dennison (69 F. 58; 16 C. C. A. 125) 295
City of Key West v. Baer (66 F. 440; 13 C. C. A. 572) 140
City of Laredo v. International Bridge & Tramway Co. (66 F. 246; 14 C. C. A. 1) 110
Clark v. National Bank of Kansas City (66 F. 404; 13 C. C. A. 545) 225
Coles v. Northrup (66 F. 831; 14 C. C. A. 138) 270
Columbus v. Dennison (69 F. 58; 16 C. C. A. 125) 295
Couper v. Gaboury (69 F. 7; 16 C. C. A. 112) 325

Page

Crow v. Kimball Lumber Co. (69 F. 61; 16 C. C. A. 127) 354

Davis v. Hargrave (72 F. 81; 18 C. C. A. 438) 723
Dumois, The George (68 F. 926; 15 C. C. A. 675) 318

Eddy & Bissell Live Stock Co. v. Blackburn (70 F. 949; 17 C. C. A. 532) 571
Eleven Hundred Head of Cattle (79 F. 1004; 24 C. C. A. 691) 763
Empire, The (69 F. 101; 16 C. C. A. 161) .. 356
Ethel, The (66 F. 340; 13 C. C. A. 504) .. 214

Florida v. Charlotte Harbor Phosphate Co. (70 F. 883; 17 C. C. A. 472) 535
Florida Cent. & P. R. Co. v. Bucki (68 F. 864; 16 C. C. A. 42) 454
Florida Cent. & P. R. Co. v. Tavares, O. & A. R. Co. (68 F. 586; 15 C. C. A. 597) 428
Florida S. R. Co. v. Walter (Pennsylvania Co. for Insurances on Lives and Granting Annuities v. Jacksonville, T. & K. W. Ry. Co., 66 F. 421; 13 C. C. A. 550) ... 188
Foreman v. Central Trust Co. (71 F. 776; 18 C. C. A. 321) 653
Frank v. Wedderin (68 F. 818; 16 C. C. A. 1) 329

George Dumois, The (68 F. 926; 15 C. C. A. 675) 318
Groves v. Sentell (66 F. 179; 13 C. C. A. 386) 119
Groves v. Sentell (69 F. 223; 16 C. C. A. 217) 382

Hartford Fire Ins. Co. of Hartford v. Small (66 F. 490; 14 C. C. A. 33) 127
Hobbs v. State Trust Co. (68 F. 618; 15 C. C. A. 604) 393
Holmes v. Junod (68 F. 858; 16 C. C. A. 36) 379
Howison v. Alabama Coal & Iron Co. (70 F. 683; 17 C. C. A. 339) 473

Digitized by Google

30 U. S. APP.—Continued. Page

Illinois Steel Co. v. Putnam (68 F. 515; 15 C. C. A. 556) 358
Imperial Fire Ins. Co. of London v. Home Ins. Co. (68 F. 698; 15 C. C. A. 609) 409

Jacksonville, T. & K. W. Ry. Co. v. Chatham Nat. Bank (66 F. 879; 14 C. C. A. 157) 761
Jacksonville, T. & K. W. Ry. Co. v. Walter (66 F. 421; 13 C. C. A. 550) 188
Javirena, The (67 F. 152; 14 C. C. A. 350) 219
Jones' Adm'r v. Ferst (66 F. 798; 14 C. C. A. 96) 87
Joseph Oteri, Jr., The (66 F. 581; 13 C. C. A. 645) 1

Key West v. Baer (66 F. 440; 13 C. C. A. 572) 140
Kildare Lumber Co. v. National Bank of Commerce (69 F. 2; 16 C. C. A. 107) 762
Knight v. Davis Carriage Co. (71 F. 662; 18 C. C. A. 287) 664

Laredo v. International Bridge & Tramway Co. (66 F. 246; 14 C. C. A. 1) 110
Little Rock Granite Co. v. Dallas County (66 F. 522; 13 C. C. A. 620) 55
Llano Improvement & Furnace Co. v. Pacific Imp. Co. (66 F. 526; 13 C. C. A. 625) 253
Loomis v. Runge (66 F. 856; 14 C. C. A. 148) 133
Louisiana Electric Light & Power Co. v. Bass Foundry & Machine Works (69 F. 65; 16 C. C. A. 130) 433
Ludtke v. Hertzog (72 F. 142; 18 C. C. A. 487) 637

Massenburg v. Denison (71 F. 618; 18 C. C. A. 280) 612
Masterson v. Brown (72 F. 136; 18 C. C. A. 481) 730
Mathis v. Runnels County (66 F. 494; 13 C. C. A. 600) 20
Merchants' & Planters' Oil Co. v. Kentucky Refining Co. (69 F. 218; 16 C. C. A. 212) 347
Miller v. Houston City St. Ry. Co. (69 F. 63; 16 C. C. A. 128) 402
Miller v. Morgan (67 F. 82; 14 C. C. A. 312) 19
Montgomery v. Dellatorre (70 F. 746; 17 C. C. A. 360) 511

Nelson v. Huidekoper (66 F. 616; 13 C. C. A. 658) 88
New Orleans & N. E. R. Co. v. Meridian Waterworks Co. (72 F. 227; 18 C. C. A. 519) 749
Nicaragua, The (72 F. 207; 18 C. C. A. 511) 710
North Alabama Development Co., In re (71 F. 764; 18 C. C. A. 309) 646

Olcott v. Rice (69 F. 199; 16 C. C. A. 186) 461
Orr v. Brown (69 F. 216; 16 C. C. A. 197) 405
Oteri, The S., (67 F. 146; 14 C. C. A. 344) 10
Oteri, Jr., The Joseph (66 F. 581; 13 C. C. A. 645) 1
Oxford, The (66 F. 590; 13 C. C. A. 647) .. 153

Peace River Phosphate Co. v. Edwards (70 F. 728; 17 C. C. A. 358) 513

Page

Pennsylvania Co. for Insurances on Lives & Granting Annuities v. Walter (66 F. 421; 13 C. C. A. 550) 188
P. J. Willis & Bro. v. Cole (66 F. 699; 14 C. C. A. 70) 762
Petersburg Sav. & Ins. Co. v. Dellatorre (70 F. 643; 17 C. C. A. 310) 504
Polk County Nat. Bank v. Foote Commercial Phosphate Co. (68 F. 845; 16 C. C. A. 23) 385
Pons v. Block (69 F. 62; 15 C. C. A. 697) 762
Porter v. James (67 F. 21; 14 C. C. A. 229) 260
Porter v. Mayfield (69 F. 67; 15 C. C. A. 699) 762
Prentiss Tool & Supply Co. v. Godchaux (66 F. 234; 13 C. C. A. 420) 68
Provisional Municipality of Pensacola v. Northup (66 F. 689; 14 C. C. A. 59) 762

Quaker City Nat. Bank v. Nolan County (66 F. 883; 14 C. C. A. 157) 5

Ray v. Tatum (72 F. 112; 18 C. C. A. 464) 635
Ricks, Ex parte (79 F. 1001; 24 C. C. A. 688) 763
Royal Ins. Co. of Liverpool v. Home Ins. Co. (68 F. 698; 15 C. C. A. 609) 409
Ruby v. Atkinson (71 F. 567; 18 C. C. A. 249) 642

St. Louis Brewing Ass'n v. Hayes (71 F. 110; 17 C. C. A. 634) 529
Salinas v. Stillman (66 F. 677; 14 C. C. A. 50) 40
Settle v. Hargadine-McKittrick Dry Goods Co. (66 F. 850; 14 C. C. A. 144) 64
Smith v. Texas Western Ry. Co. (73 F. 1022; 19 C. C. A. 681) 763
S. Oteri, The (67 F. 146; 14 C. C. A. 344) .. 10
Sneed v. Sellers (66 F. 371; 13 C. C. A. 518; 68 F. 729; 15 C. C. A. 631) 8
Southwestern R. Co. v. Central Railroad & Banking Co. (73 F. 1023; 19 C. C. A. 681) 763
State of Florida v. Charlotte Harbor Phosphate Co. (70 F. 883; 17 C. C. A. 472) .. 535
Spencer v. Uselton (79 F. 1002; 24 C. C. A. 689) 763
Stevens v. McKibbin (68 F. 406; 15 C. C. A. 498) 363
Sullivan v. McConnell (73 F. 130; 19 C. C. A. 400) 740
Supreme Lodge, Knights of Pythias of the World v. Wilson (66 F. 785; 14 C. C. A. 264) 234

Texas & P. Ry. Co. v. Barrett (67 F. 214; 14 C. C. A. 373) 196
Texas & P. Ry. Co. v. Cody (67 F. 71; 14 C. C. A. 310) 183
Texas & P. Ry. Co. v. Dietz (70 F. 944; 71 F. 531; 17 C. C. A. 524) 549
Texas & P. Ry. Co. v. Elliott (71 F. 378; 18 C. C. A. 139) 606
Texas & P. Ry. Co. v. Juneman (71 F. 939; 18 C. C. A. 394) 541
Texas & P. Ry. Co. v. Rhodes (71 F. 145; 18 C. C. A. 9) 561
Texas & P. Ry. Co. v. Smith (67 F. 524; 14 C. C. A. 509) 176

Digitized by Google

30 U. S. APP.—Continued. Page

Texas & P. Ry. Co. v. Spradling (72 F. 152; 18 C. C. A. 496) 698
Texas & P. Ry. Co. v. Thompson (70 F. 944; 71 F. 531; 17 C. C. A. 524) 549
Topliff v. Atlanta Land Imp. Co. (66 F. 853; 14 C. C. A. 146) 78
Turner v. United States (66 F. 280; 13 C. C. A. 436) 90
Turner v. United States (66 F. 286; 13 C. C. A. 442) 101
Turner v. United States (66 F. 289; 13 C. C. A. 445) 104
Turner v. United States (66 F. 287; 13 C. C. A. 443) 108

United States v. Alonzo (United States v. Arteago, 68 F. 883; 16 C. C. A. 58) 297
United States v. Alvarez (United States v. Arteago, 68 F. 883; 16 C. C. A. 58) 297
United States v. Amor (68 F. 885; 16 C. C. A. 60) 302
United States v. Arango (United States v. Arteago, 68 F. 883; 16 C. C. A. 58) 297
United States v. Arego (United States v. Amor, 68 F. 885; 16 C. C. A. 60) 302
United States v. Arteago (68 F. 883; 16 C. C. A. 58) 297
United States v. Barbado (United States v. Arteago, 68 F. 883; 16 C. C. A. 58) 297
United States v. Buznago (United States v. Arteago, 68 F. 883; 16 C. C. A. 58) 297
United States v. Cabrera (United States v. Arteago, 68 F. 883; 16 C. C. A. 58) 297
United States v. Callia (United States v. Arteago, 68 F. 883; 16 C. C. A. 58) 297
United States v. Cantos (United States v. Arteago, 68 F. 883; 16 C. C. A. 58) 297
United States v. Carballo (United States v. Arteago, 68 F. 883; 16 C. C. A. 58) 297
United States v. De La Torre (United States v. Arteago, 68 F. 883; 16 C. C. A. 58) 298
United States v. Diaz (United States v. Arteago, 68 F. 883; 16 C. C. A. 58) 297
United States v. Fernandez (United States v. Arteago, 68 F. 883; 16 C. C. A. 58) 297
United States v. Fourteen Packages of Whisky (66 F. 984; 14 C. C. A. 220) 240
United States v. Garcia (United States v. Arteago, 68 F. 883; 16 C. C. A. 58) 297
United States v. Gomez (United States v. Arteago, 68 F. 883; 16 C. C. A. 58) 297
United States v. Gonzales (United States v. Arteago, 68 F. 883; 16 C. C. A. 58) 297
United States v. Guardado (United States v. Arteago, 68 F. 883; 16 C. C. A. 58) 297
United States v. Hoyos (United States v. Arteago, 68 F. 883; 16 C. C. A. 58) 297
United States v. Lage (United States v. Amor, 68 F. 885; 16 C. C. A. 60) 302
United States v. Lombardero (United States v. Arteago, 68 F. 883; 16 C. C. A. 58) 297
United States v. Lopez (United States v. Arteago, 68 F. 883; 16 C. C. A. 58) 297
United States v. Martinez (United States v. Arteago, 68 F. 883; 16 C. C. A. 58) 297
United States v. Mendevil (United States v. Amor, 68 F. 885; 16 C. C. A. 60) 302
United States v. Munez (United States v. Arteago, 68 F. 883; 16 C. C. A. 58) 297
United States v. Oteri (67 F. 146; 14 C. C. A. 344) 10
United States v. Pardo (United States v. Arteago, 68 F. 883; 16 C. C. A. 58) 297
United States v. Permuy (United States v. Arteago, 68 F. 883; 16 C. C. A. 58) 297
United States v. Ramirez (United States v. Arteago, 68 F. 883; 16 C. C. A. 58) 297
United States v. Rodriguez (United States v. Arteago, 68 F. 883; 16 C. C. A. 58) 297
United States v. Rodriguez (United States v. Amor, 68 F. 885; 16 C. C. A. 60) 302
United States v. Santos (United States v. Arteago, 68 F. 883; 16 C. C. A. 58) 298
United States v. Suarez (United States v. Arteago, 68 F. 883; 16 C. C. A. 58) 297
United States v. Verdera (United States v. Arteago, 68 F. 883; 16 C. C. A. 58) 298
United States v. Villaverde (United States v. Arteago, 68 F. 883; 16 C. C. A. 58) 298
United States v. Villanueva (United States v. Amor, 68 F. 885; 16 C. C. A. 60) 302

Virginia & Alabama Coal Co. v. Central Railroad & Banking Co. (66 F. 803; 14 C. C. A. 112) 263

Walters' Ex'rs v. Capital City Bank (66 F. 862; 14 C. C. A. 267) 25
Western Assur. Co. v. Redding (68 F. 708; 15 C. C. A. 619) 442
Western Assur. Co. v. Southern Cotton Oil Co. (68 F. 924; 16 C. C. A. 67) 376
Western Assur. Co. v. Southwestern Transp. Co. (68 F. 923; 16 C. C. A. 65) 373
Western Union Beef Co. v. Thurman (70 F. 960; 17 C. C. A. 542) 516
Western Mortg. & Inv. Co. v. Burford (71 F. 74; 17 C. C. A. 602) 593
White v. Keller (68 F. 796; 15 C. C. A. 683) 275
Willis & Bro. v. Cole (66 F. 699; 14 C. C. A. 70) 762

Zachry v. Nolan (66 F. 467; 14 C. C. A. 253) 244

Digitized by Google

VOL. 32, U. S. APPEALS REPORTS.

(8th Circuit.)

Page

Aetna Life Ins. Co. v. Florida (69 F. 932; 16 C. C. A. 618) 753
American Cent. Ins. Co. v. Heiserman (67 F. 947; 15 C. C. A. 95) 400
American Employers' Liability Ins. Co. v. Barr (68 F. 873; 16 C. C. A. 51) 444
Anheuser-Busch Brewing Ass'n v. Bond (66 F. 653; 13 C. C. A. 665) 38
Atchison, T. & S. F. R. Co. v. Cameron (66 F. 709; 14 C. C. A. 358) 67

Board of Com'rs of Grand County v. King (67 F. 202; 14 C. C. A. 421) 1
Board of Com'rs of Grand County v. King (67 F. 945; 14 C. C. A. 421) 402
Board of Com'rs of Kearny County v. McMaster (68 F. 177; 15 C. C. A. 353) 367

Camfield v. United States (66 F. 101; 13 C. C. A. 359) 42
Camfield v. United States (67 F. 17; 14 C. C. A. 228) 123
Chicago, B. & Q. R. Co. v. Board of Com'rs of Norton County (67 F. 413; 14 C. C. A. 458) 227
Chicago, B. & Q. R. Co. v. Board of Com'rs of Republic County (67 F. 411; 14 C. C. A. 456) 224
Chicago, St. P. & K. C. Ry. Co. v. Chambers' Adm'x (68 F. 148; 15 C. C. A. 327) 253
Chicago & N. E. R. Co. v. Tripkosh's Adm'r (67 F. 665; 14 C. C. A. 615) 168
Chicago & N. W. Ry. Co. v. Tripkosh's Adm'r (67 F. 665; 14 C. C. A. 615) 406
Churchill v. United States (67 F. 529; 14 C. C. A. 513) 196
City of Naples, The (69 F. 794; 16 C. C. A. 421) 613
City of Omaha v. New England Loan & Trust Co. (79 F. 992; 24 C. C. A. 679) 769
Condran's Adm'x v. Chicago, M. & St. P. Ry. Co. (67 F. 522; 14 C. C. A. 506) 182
Cornell's Ex'rs v. First Nat. Bank (McFarlin v. First Nat. Bank, 68 F. 868; 16 C. C. A. 46) 426
Criner v. Matthews (67 F. 945; 15 C. C. A. 93) 405
Cudahy Packing Co. v. Sioux Nat. Bank (69 F. 782; 16 C. C. A. 409) 600

Davis & Rankin Bldg. & Manuf'g Co. v. Jones (66 F. 124; 14 C. C. A. 30) 32
Dawson Town & Gas Co. v. Woodhull (67 F. 451; 14 C. C. A. 464) 134
Denver & R. G. R. Co. v. Walker (68 F. 23; 15 C. C. A. 188) 420
Doze v. Smith (69 F. 1002; 16 C. C. A. 581) 589

Enterprise Min. Co. v. Rico-Aspen Consol. Min. Co. (66 F. 200; 13 C. C. A. 390) 75

Farmers' Loan & Trust Co. v. Lamont (69 F. 23; 16 C. C. A. 364) 480
Finalyson v. Utica Mining & Milling Co. (67 F. 507; 14 C. C. A. 492) 143

Page

Firemen's Fund Ins. Co. v. Norwood (69 F. 71; 16 C. C. A. 136) 490
First Nat. Bank of Burlingame v. Hanover Nat. Bank (66 F. 34; 13 C. C. A. 313) 29
First Nat. Bank of Lansdale v. Board of Com'rs of Wyandotte County (68 F. 878; 16 C. C. A. 56) 441
Fisher v. Simon (67 F. 387; 14 C. C. A. 443) 132

Gaines' Ex'r v. Cohn (68 F. 72; 15 C. C. A. 231) 36
Gaines' Ex'r v. Garnett (68 F. 72; 15 C. C. A. 231) 347
Gaines' Ex'r v. Granger (68 F. 69; 15 C. C. A. 228) 342
Gaines' Ex'r v. Neubert (68 F. 72; 15 C. C. A. 231) 347
Gaines' Ex'r v. Rugg (68 F. 72; 15 C. C. A. 231) 347
Gaines' Ex'r v. Sumpter (68 F. 72; 15 C. C. A. 231) 347
Glidden & Joy Varnish Co. of Ohio v. Interstate Nat. Bank (69 F. 912; 16 C. C. A. 534) 654

Haldane v. United States (69 F. 819; 16 C. C. A. 447) 607
Hardy v. Ketchum (67 F. 282; 14 C. C. A. 398) 198
Hastings v. Ames (68 F. 726; 15 C. C. A. 628) 485
Hastings v. Higginson (68 F. 726; 15 C. C. A. 628) 485
Hastings v. Smith (68 F. 726; 15 C. C. A. 628) 485
Hinkley v. City of Arkansas City (69 F. 768; 16 C. C. A. 395) 640
Hofflin v. Moss (67 F. 440; 14 C. C. A. 459) 200
Hubbard v. Tod (79 F. 996; 24 C. C. A. 683) 767

Interstate Nat. Bank of New York v. Newton Nat. Bank (66 F. 695; 14 C. C. A. 65) 59

Jones v. Meehan (79 F. 997; 24 C. C. A. 683) 768

Kahnweiler v. Phenix Ins. Co. of Brooklyn (67 F. 483; 14 C. C. A. 485) 230
Kansas & A. Val. Ry. Co. v. White's Adm'x (67 F. 481; 14 C. C. A. 483) 192
Kingman v. Western Manuf'g Co. (79 F. 997; 24 C. C. A. 684) 768
Knox County v. Morton (68 F. 787; 15 C. C. A. 671) 513

Ladd v. Missouri Coal & Mining Co. (66 F. 880; 14 C. C. A. 246) 93
Leak Glove Manuf'g Co. v. Needles (69 F. 68; 16 C. C. A. 132) 461
Lincoln Nat. Bank of Lincoln v. Perry (66 F. 887; 14 C. C. A. 273) 15

Digitized by Google

32 U. S. APP.—Continued. Page

McAleese v. Goodwin (69 F. 759; 16 C. C. A. 387) 650
McClellan v. Pyeatt (66 F. 843; 14 C. C. A. 140) 104
McCulloch v. Chatfield (67 F. 877; 15 C. C. A. 48) 323
Magna Charta Silver Mining & Tunnel Co. v. Hole (79 F. 997; 24 C. C. A. 684)... 768
Merchants' Bank of St. Joseph v. Crysler (67 F. 388; 14 C. C. A. 444)..... 187
Miller v. Choctaw, O. & G. Ry. Co. (79 F. 998; 24 C. C. A. 685)..... 769
Mississippi River Logging Co. v. Robson (69 F. 773; 16 C. C. A. 400)..... 520
Missouri Pac. Ry. Co. v. Hall (66 F. 868; 14 C. C. A. 153)..... 60
Missouri Pac. Ry. Co. v. Meeh (69 F. 753; 16 C. C. A. 510)..... 691

Nelson v. First Nat. Bank (69 F. 798; 16 C. C. A. 425)..... 554
Northern Pac. R. Co. v. Lamont (69 F. 23; 16 C. C. A. 364)..... 480
Northern Pac. R. Co. v. Smith (69 F. 579; 16 C. C. A. 336)..... 573

Olds Wagon Works v. Benedict (67 F. 1; 14 C. C. A. 285)..... 116
Omaha v. New England Loan & Trust Co. (79 F. 992; 24 C. C. A. 679)..... 769
Oolagah Coal Co. v. McCaleb (68 F. 86; 15 C. C. A. 270)..... 330
Orr & Lindsley Shoe Co. v. Needles (67 F. 990; 15 C. C. A. 142)..... 410

Pauly Jail Bldg. & Manuf'g Co. v. Board of Com'rs of Kearny County (68 F. 171; 15 C. C. A. 351)..... 338
Peninsular Iron Co. v. Eells (68 F. 24; 15 C. C. A. 189)..... 348
Pierce's Adm'r v. Union Pac. Ry. Co. (66 F. 44; 13 C. C. A. 323)..... 48
Prickett v. City of Marceline (69 F. 462; 15 C. C. A. 700)..... 767

Reynolds v. Great Northern Ry. Co. (69 F. 808; 16 C. C. A. 435)..... 577
Roggenkamp v. Roggenkamp (68 F. 605; 15 C. C. A. 600)..... 453
Rouse v. Cloughley (67 F. 222; 14 C. C. A. 380)..... 125
Rouse v. Hornsby (67 F. 219; 14 C. C. A. 377)..... 111

St. Louis, I. M. & S. Ry. Co. v. Needham (69 F. 823; 16 C. C. A. 457)..... 635
St. Paul, M. & M. Ry. Co. v. St. Paul & N P. Ry. Co. (68 F. 2; 15 C. C. A. 167)... 372
St. Paul & N. P. Ry. Co. v. St. Paul, M. & M. Ry. Co. (68 F. 2; 15 C. C. A. 167) 372
St. Louis & S. F. Ry. Co. v. Bennett's Adm'x (69 F. 525; 16 C. C. A. 300).... 621
St. Louis & S. F. Ry. Co. v. Bennett's Adm'x (69 F. 530; 16 C. C. A. 680)..... 630
St. Louis & S. F. Ry. Co. v. Brown's Adm'r (69 F. 530; 16 C. C. A. 682)..... 632
St. Louis & S. F. Ry. Co. v. Spoon's Adm'r (69 F. 531; 16 C. C. A. 680)..... 633
St. Louis & S. F. Ry. Co. v. Spoon's Adm'r 69 F. 531; 16 C. C. A. 681)..... 634
Salmon v. Mills (68 F. 180; 15 C. C. A. 356) 422
Sampson v. Donaldson (69 F. 621; 16 C. C. A. 342)..... 712
Scott v. Farmers' Loan & Trust Co. (69 F. 17; 16 C. C. A. 358..... 468
Severs v. Bull (79 F. 1002; 24 C. C. A. 689) 769
Severs v. Northern Trust Co. (79 F. 1002; 24 C. C. A. 689)..... 769
Shreve v. Cheesman (69 F. 785; 16 C. C. A. 413) 676
Sioux City, O'N. & W. Ry. Co. v. Manhattan Trust Co. (79 F. 1002; 24 C. C. A. 689) 767
State Nat. Bank of St. Joseph v. Newton Nat. Bank (66 F. 691; 14 C. C. A. 61).. 52

Tarver v. Stevenson (66 F. 633; 13 C. C. A. 661) 97
Taylor-Craig Corp. v. Hage (69 F. 581; 16 C. C. A. 339)..... 548
Thurber v. Miller (67 F. 371; 14 C. C. A. 432) 209
Tod v. Hubbard (79 F. 1003; 24 C. C. A. 690) 768
Travelers' Ins. Co. of Hartford v. Henderson (69 F. 762; 16 C. C. A. 390)..... 536

Union Iron Works v. Smith (69 F. 827; 16 C. C. A. 451)..... 703
Union Pac. Ry. Co. v. United States (67 F. 975; 15 C. C. A. 123)..... 311
United States v. Biggert (70 F. 38; 16 C. C. A. 616) 762
United States v. McAleer (68 F. 146; 15 C. C. A. 326)..... 335
United States v. Morgan (66 F. 279; 13 C. C. A. 435)..... 51
United States v. St. Paul & S. C. R. Co. (67 F. 973; 15 C. C. A. 121)..... 304
United States v. Union Pac. Ry. Co. (67 F. 974; 15 C. C. A. 122)..... 320
United States v. Winona & St. P. R. Co. (67 F. 948; 15 C. C. A. 96)..... 272
United States v. Winona & St. P. R. Co. (67 F. 969; 15 C. C. A. 117)..... 306
United States ex rel. Fisher v. Williams (67 F. 384; 14 C. C. A. 440)..... 126

Waples-Platter Co. v. Turner (79 F. 1005; 24 C. C. A. 692)..... 769
Weatherby v. St. Louis & S. F. Ry. Co. (79 F. 1006; 24 C. C. A. 693)..... 769
Weldon v. Tollman (67 F. 986; 15 C. C. A. 138) 265
Western Union Tel. Co. v. Coggin (68 F. 137; 15 C. C. A. 231)..... 245
West Plains Tp. v. Sage (69 F. 943; 16 C. C. A. 553)..... 725
Williams v. American Nat. Bank (79 F. 1006; 24 C. C. A. 693)..... 770
Wisconsin Trust Co. v. Robinson & Cary Co. (68 F. 778; 15 C. C. A. 668)..... 435

Digitized by Google

VOL. 37, U. S. APPEALS REPORTS.

(6th Circuit.)

Page

Allen v. Seawell (70 F. 561; 17 C. C. A. 217) 436
American Fibre Chamois Co. v. Buckskin Fibre Co. (72 F. 508; 18 C. C. A. 662) .. 742
American Fibre Chamois Co. v. Mueller (72 F. 508; 18 C. C. A. 662) 742
American Fibre Chamois Co. v. Port Huron Fibre Garment Manuf'g Co. (72 F. 516; 18 C. C. A. 670) 756
American Fibre Chamois Co. v. Root's Ex'r (72 F. 508; 18 C. C. A. 662) 742

Blackmore v. Guarantee Co. of North America (71 F. 363; 18 C. C. A. 77) 444
Blackmore v. Matthews' Adm'r (71 F. 321; 18 C. C. A. 57) 531
Block v. Walker (72 F. 650; 19 C. C. A. 61) 680
Brock v. Seawell (70 F. 561; 17 C. C. A. 217) 436
Buchanan v. Knoxville & O. R. Co. (71 F. 324; 18 C. C. A. 122) 499

Celina v. Eastport Sav. Bank (68 F. 401; 15 C. C. A. 495) 164
Cincinnati, H. & D. R. Co. v. Van Horne (69 F. 139; 16 C. C. A. 182) 262
City of Gladstone v. Throop (71 F. 341; 18 C. C. A. 61) 481
Clay City Nat. Bank v. Halsey (70 F. 567; 17 C. C. A. 222) 419

Duplex Printing Press Co. v. Campbell Printing Press & Manufacturing Co. (69 F. 250; 16 C. C. A. 220) 250

East Tennessee Iron & Coal Co. v. Wiggin (68 F. 446; 15 C. C. A. 510) 129
Elder v. McClaskey (70 F. 529; 17 C. C. A. 251) 1
Elder v. McClaskey (70 F. 529; 17 C. C. A. 251) 199
Enterprise Sav. Ass'n v. Zumstein (67 F. 1000; 15 C. C. A. 153) 71
Ewing v. White (69 F. 451; 16 C. C. A. 296) 365

Fargo v. Poe (69 F. 546; 16 C. C. A. 305) 378
Fink v. Campbell (70 F. 664; 17 C. C. A. 325) 462
Fisher v. Brown (70 F. 570; 17 C. C. A. 225) 407
Fletcher v. McArthur (68 F. 65; 15 C. C. A. 224) 69

Garrett v. Boeing (68 F. 51; 15 C. C. A. 209) 42
Gates v. Seawell (70 F. 561; 17 C. C. A. 217) 436
Germania Safety Vault & Trust Co. v. Boynton (71 F. 797; 19 C. C. A. 118) .. 602
Gladstone v. Throop (71 F. 341; 18 C. C. A. 61) 481
Goshen Sweeper Co. of Grand Rapids v. Bissell Carpet Sweeper Co. (72 F. 67; 19 C. C. A. 13) 555

Page

Goshen Sweeper Co. of Grand Rapids v. Bissell Carpet Sweeper Co. (72 F. 67; 19 C. C. A. 13) 689
Griswold v. Wagner (68 F. 494; 15 C. C. A. 525) 171

Harvey v. Winney (79 F. 996; 24 C. C. A. 683) 775
Heaton Peninsular Button Fastener Co. v. Schlochtermeyer (72 F. 520; 18 C. C. A. 674) 764
Hidy v. Seawell (70 F. 561; 17 C. C. A. 217) 436
High Bridge Lumber Co. v. United States (69 F. 320; 16 C. C. A. 460) 234
Hodge v. Palms (68 F. 61; 15 C. C. A. 220) 61
Hotchkiss & Upson Co. v. Union Nat. Bank (68 F. 76; 15 C. C. A. 264) 86

Insurance Co. of North America of Philadelphia v. Johnson (70 F. 794; 17 C. C. A. 416) 413
Iron County, In re (United States v. Severens, 71 F. 768; 18 C. C. A. 314) .. 622

Jonathan Mills Manuf'g Co. v. Whitehurst (72 F. 496; 19 C. C. A. 130) 664

Kleinhans v. Jones (68 F. 742; 15 C. C. A. 644) 185

Lake Erie & W. Ry. Co. v. Craig (73 F. 642; 19 C. C. A. 631) 654
Loveless v. Seawell (70 F. 561; 17 C. C. A. 217) 436

McCants v. Peninsular Land Co. (68 F. 66; 15 C. C. A. 225) 67
McConnell v. Provident Sav. Life Assur. Soc. (69 F. 113; 16 C. C. A. 172) 213
McCormick Harvesting Mach. Co. v. Aultman, Miller & Co. (69 F. 371; 16 C. C. A. 259) 299
McCormick Harvesting Mach. Co. v. C. Aultman & Co. (69 F. 371; 16 C. C. A. 259) 299
McCutcheon v. Merx Capsule Co. (71 F. 787; 19 C. C. A. 108) 586
McElwee v. Metropolitan Lumber Co. (69 F. 302, 16 C. C. A. 232) 266
Michigan v. Jackson, L. & S. R. Co. (69 F. 116; 16 C. C. A. 345) 220
Michigan Cent. R. Co. v. Consolidated Car Heating Co. (69 F. 1; 16 C. C. A. 106) .. 211
Mills Manuf'g Co. v. Whitehurst (72 F. 496; 19 C. C. A. 130) 664
Morancy v. Palms (68 F. 64; 15 C. C. A. 223) 66

National Acc. Soc. v. Spiro (71 F. 897; 18 C. C. A. 382) 639
Ney v. Ney Manuf'g Co. (69 F. 405; 16 C. C. A. 293) 371

Odell v. Reynolds (70 F. 656; 17 C. C. A. 317) 447

Digitized by Google

37 U. S. APP.—Continued.

Page
Ohio Falls Car Manuf'g Co. v. Central Trust Co. (71 F. 916; 18 C. C. A. 386).. 523
Paine's Ex'x v. Consumers' Forwarding & Storage Co. (71 F. F. 626; 19 C. C. A. 99) 539
Penn Mut. Life Ins. Co. v. Mechanics' Sav. Bank & Trust Co. (72 F. 413; 19 C. C. A. 286) 692
Platt v. Poe (69 F. 546; 16 C. C. A. 305).. 378
Reimers v. Seatco Manuf'g Co. (70 F. 573; 17 C. C. A. 228)..... 426
Rhino v. Emery (72 F. 382; 18 C. C. A. 600) 575
Riggs v. Clark (71 F. 560; 18 C. C. A. 242) 626
Sanford v. Poe (69 F. 546; 16 C. C. A. 305) 378
Shipman v. Ohio Coal Exchange (70 F. 652; 17 C. C. A. 313)..... 471
Smith v. Seawell (70 F. 561; 17 C. C. A. 217) 436
Society of Shakers at Pleasant Hill v. Watson (68 F. 730; 15 C. C. A. 632)... 141
State of Michigan v. Jackson, L. & S. R. Co. (69 F. 116; 16 C. C. A. 345)..... 220
Thompson v. Nelson (71 F. 339; 18 C. C. A. 137) 478
Trumper v. Seawell (70 F. 561; 17 C. C. A. 217) 436
United States v. Dunbar (67 F. 783; 14 C. C. A. 639) 98
United States v. Fitch (70 F. 578; 17 C. C. A. 233) 103
United States v. Laws (79 F. 1005; 24 C. C. A. 691) 775
Village of Celina v. Eastport Sav. Bank (68 F. 401; 15 C. C. A. 495)..... 164
Western Union Tel. Co. v. Poe (69 F. 557; 16 C. C. A. 683)..... 399
White v. Ewing (69 F. 451; 16 C. C. A. 296) 365
Wilson's Ex'x v. Pauly (72 F. 129; 18 C. C. A. 475) 642
Withington-Cooley Manuf'g Co. v. Kinney (68 F. 500; 15 C. C. A. 531)..... 117
Woodmanse & Hewitt Manuf'g Co. v. Williams (68 F. 489; 15 C. C. A. 520)... 109
Yates v. Seawell (70 F. 561; 17 C. C. A. 217) 436

VOL. 38, U. S. APPEALS REPORTS.

(2d Circuit.)

Adams, The Warren (74 F. 413; 20 C. C. A. 486) 356
Advance, The (71 F. 987; 18 C. C. A. 404) 197
Advance, The (72 F. 793; 19 C. C. A. 194) 344
Advance, The (72 F. 791; 19 C. C. A. 192) 406
Advance, The (73 F. 503; 19 C. C. A. 541) 531
Aller, The, and The America (73 F. 875; 20 C. C. A. 79)..... 549
Allianca, The (71 F. 987; 18 C. C. A. 404) 197
Allianca, The (72 F. 793; 19 C. C. A. 194) 344
Allianca, The (72 F. 791; 19 C. C. A. 192) 406
Allianca, The (73 F. 503; 19 C. C. A. 541) 531
Allianca, The (73 F. 452; 19 C. C. A. 528) 563
America, The (73 F. 875; 20 C. C. A. 79) 549
American Credit Indemnity Co. of New York v. Wood (73 F. 81; 19 C. C. A. 264) 583
American Surety Co. of New York v. Pauly (72 F. 470; 18 C. C. A. 644)... 254
American Surety Co. of New York v. Pauly (72 F. 484; 18 C. C. A. 657).... 280
Atlantic Ave. R. Co. of Brooklyn v. Van Dyke (72 F. 458; 18 C. C. A. 632)..... 334
Atlantic Ave. R. Co. of Brooklyn v. Van Dyke (72 F. 458; 18 C. C. A. 632).... 340
Audsley v. City of New York (74 F. 274; 20 C. C. A. 426) 689
Bevin Bros. Manuf'g Co. v. New Departure Bell Co. (73 F. 469; 19 C. C. A. 534) 292
Bardsley v. Blount Manuf'g Co. (75 F. 674; 21 C. C. A. 495)..... 608
Briggs' Adm'x v. Town of Phelps (79 F. 1003; 24 C. C. A. 690)..... 725
British & Foreign Marine Ins. Co. v. Southern Pac. Co. (72 F. 285; 18 C. C. A. 561) 243
Canadian Pac. Ry. Co. v. Clark (73 F. 76; 74 F. 362; 20 C. C. A. 447)..... 573
Ceres, The (72 F. 936; 19 C. C. A. 243).. 441
Circassia, The (73 F. 878; 20 C. C. A. 81) 506
C. P. Minch, The (73 F. 859; 20 C. C. A. 70) 536
Daylight, The (73 F. 878; 20 C. C. A. 81) 506
Dennison Manuf'g Co. v. United States (72 F. 258; 18 C. C. A. 543)..... 234
Dooley v. Hadden (74 F. 420; 20 C. C. A. 494) 651
Dunbritton, The (73 F. 352; 19 C. C. A. 449) 369
Elliot v. Bonsack Mach. Co. (73 F. 834; 20 C. C. A. 58)..... 596
Elmira & H. Ry. Co. v. Thomson-Houston Electric Co. (71 F. 396; 18 C. C. A. 145) 55
Etona, The (71 F. 895; 18 C. C. A. 380).. 50
Euripides, The (71 F. 728; 18 C. C. A. 226) 1
Evening Post Pub. Co. v. Voight (72 F. 885; 19 C. C. A. 224)..... 394
Fearing v. Glenn (73 F. 116; 19 C. C. A. 388) 424
Fisher v. American Pneumatic Tool Co. (71 F. 523; 18 C. C. A. 235)..... 129
Florence, The (71 F. 527; 18 C. C. A. 240) 32

Digitized by Google

38 U. S. APP.—Continued. Page

Gandolfi v. United States (74 F. 549; 20 C. C. A. 652) 647
Glenn v. Porter (73 F. 275; 19 C. C. A. 503) 422
Gracie May, The (72 F. 283; 18 C. C. A. 559) 223

Hackettstown Nat. Bank v. D. G. Yuengling Brewing Co. (74 F. 110; 20 C. C. A. 327) 681
Hercules, The (73 F. 255; 19 C. C. A. 496) 602
Hine v. New York & Bermudez Co. (73 F. 852; 20 C. C. A. 63) 520
Hubbard v. Exchange Bank (72 F. 234; 18 C. C. A. 525) 289

Kent v. United States (73 F. 680; 19 C. C. A. 642) 554

Lahey v. United States (71 F. 870; 18 C. C. A. 341) 191
Loewenthal v. United States (71 F. 692; 18 C. C. A. 299) 20
Lumley v. Backus Manuf'g Co. (73 F. 767; 20 C. C. A. 1) 480

Matheson & Co. v. United States (71 F. 394; 18 C. C. A. 143) 25
May, The Gracie (72 F. 283; 18 C. C. A. 559) 223
Miller v. Donovan (73 F. 682; 19 C. C. A. 644) 483
Minch, The C. P. (73 F. 859; 20 C. C. A. 70) 536
Mutual Life Ins. Co. of New York v. Leubrie (71 F. 843; 18 C. C. A. 332) ... 37

National Cigarette & Tobacco Co. v. Bonsack Mach. Co. (73 F. 834; 20 C. C. A. 58) 596
Northern Cent. Ry. Co. v. Herchiskel's Adm'x (74 F. 460; 20 C. C. A. 593) ... 659

Orvis v. Wells, Fargo & Co. (73 F. 110; 19 C. C. A. 382) 471
Oppenheimer v. United States (71 F. 869; 18 C. C. A. 340) 216

Pangburn v. Hadden (74 F. 429; 20 C. C. A. 494) 651
Payson v. United States (Wood v. United States, 72 F. 254; 18 C. C. A. 553) .. 226
Pings v. United States (72 F. 260; 18 C. C. A. 557) 250
Press Pub. Co. v. McDonald (73 F. 440; 19 C. C. A. 516) 557
Press Pub. Co. v. Monroe (73 F. 196; 19 C. C. A. 429) 410
Potomac, The (72 F. 535; 19 C. C. A. 151) 219

Riverside Bank v. First Nat. Bank (74 F. 276; 20 C. C. A. 181) 674

Schoellkopf, Hartford & Maclagan v. United States (71 F. 694; 18 C. C. A. 301) . 17
Seguranca, The (71 F. 987; 18 C. C. A. 404) 197
Seguranca, The (72 F. 791; 19 C. C. A. 192) 406
Seguranca, The (73 F. 503; 19 C. C. A. 541) 531
Southern Pac. Co. v. British & Foreign Marine Ins. Co. (72 F. 285; 18 C. C. A. 561) 243
Sydsvenska Angfartygs Aktiebolaget v. Wessels (72 F. 936; 19 C. C. A. 243) .. 441

Tebbetts v. Mercantile Credit Guarantee Co. (73 F. 95; 19 C. C. A. 281) 431
Thomson-Houston Electric Co. v. Elmira & H. Ry. Co. (71 F. 396; 18 C. C. A. 145) 55
Tiffany v. United States (71 F. 691; 18 C. C. A. 297) 29
Tinsley v. Jemison (74 F. 177; 20 C. C. A. 371) 667
Townsend v. Hagar (72 F. 949; 19 C. C. A. 256) 362
Trojan Car Coupler Co. v. Gould Coupler Co. (74 F. 794; 21 C. C. A. 97) 702
Troy Laundry Machinery Co. v. Adams Laundry Machinery Co. (73 F. 301; 19 C. C. A. 505) 457

United States v. Boussod-Valadon Co. (71 F. 503; 18 C. C. A. 223) 47
United States v. China & Japan Trading Co. (71 F. 864; 18 C. C. A. 335) 211
United States v. Dickson (73 F. 195; 19 C. C. A. 428) 476
United States v. Klumpp (United States v. Murphy, 72 F. 1008; 19 C. C. A. 343) 467
United States v. Lies (74 F. 546; 20 C. C. A. 651) 655
United States v. Madrazo's Ex'r (United States v. Coudert, 73 F. 505; 19 C. C. A. 543) 515
United States v. Mayer (71 F. 501; 18 C. C. A. 221) 43
United States v. Presbyterian Hospital (71 F. 866; 18 C. C. A. 338) 201

Vigilancia, The (71 F. 987; 18 C. C. A. 404) 197
Vigilancia, The (72 F. 793; 19 C. C. A. 194) 344
Vigilancia, The (72 F. 791; 19 C. C. A. 192) 406
Vigilancia, The (73 F. 503; 19 C. C. A. 541) 531
Vigilancia, The (73 F. 452; 19 C. C. A. 528) 563

Warren Adams, The (74 F. 413; 20 C. C. A. 486) 356
Waydell v. Gabrielson (72 F. 648; 19 C. C. A. 58) 328
Waydell v. Gabrielson (73 F. 1021; 19 C. C. A. 680) 479
Webster v. Daly (75 F. 1022; 20 C. C. A. 680) 696
Wertheimer v. United States (73 F. 296; 19 C. C. A. 504) 404
White v. United States (72 F. 251; 18 C. C. A. 541) 239
Whitman v. Vanderbilt (75 F. 422; 21 C. C. A. 422) 693
Wm. J. Matheson & Co. v. United States (71 F. 394; 18 C. C. A. 143) 25

WEST PUBLISHING CO., PRINTERS AND STEREOTYPERS, ST. PAUL, MINN.

Digitized by Google

Digitized by Google

Digitized by Google

Digitized by Google

Digitized by Google

Digitized by Google

Digitized by Google